1990 Mazda 323 4-Wheel Drive Workshop Manual Supplement

FOREWORD

This is a supplement to the workshop manual(s) shown below. This supplement describes service procedures of new or modified mechanical and/or electrical systems. For service procedures and important safety notices not contained in this supplement, please refer to the previous workshop manual.

Workshop Manual:
Form No.1195-10-89E

All information in this supplement was the latest available at the time of printing, all alternations related to modifications will be notified by Service Bulletin.

Mazda Motor Corporation
HIROSHIMA, JAPAN

APPLICATION:
This manual is applicable to vehicles beginning with the Vehicle Identification Numbers (VIN) shown on the following page.

CONTENTS

Title	Section
General Information	GI
Pre-Delivery Inspection and Scheduled Maintenance Services	A
Engine	B
Lubrication System	D
Cooling System	E
Fuel and Emission Control System	F
Engine Electrical System	G
Clutch	H
Manual Transaxle and Transfer	J3
Automatic Transaxle and Transfer	K2
Propeller Shaft	L
Front and Rear Axles	M
Steering System	N
Braking System	P
Wheels and Tires	Q
Suspension	R
Body	S
Body Electrical System	T
Heater and Air Conditioner Systems	U
Technical Data	TD
Special Tools	ST
Parts Index	PI
Wiring Diagram (Form No. 5145-10-89G)	Z

© 1989 Mazda Motor Corporation
PRINTED IN JAPAN, SEP., '89 Ⓝ
1213-10-89I

Downloaded from www.Manualslib.com manuals search engine

VEHICLE IDENTIFICATION NUMBERS (VIN)

JM1 BG227 * L0 100001 ~
JM1 BG228 * L0 100001 ~

Downloaded from www.Manualslib.com manuals search engine

GENERAL INFORMATION

IMPORTANT INFORMATION ..... **GI– 2**
BASIC ASSUMPTIONS ..... **GI– 2**
SAFETY RISK ..... **GI– 2**
POSSIBLE LOSS OF WARRANTY ..... **GI– 2**
WARNING ON LUBRICANTS AND GREASES ..... **GI– 2**
HOW TO USE THIS MANUAL ..... **GI– 3**
PREPARATION ..... **GI– 3**
REPAIR PROCEDURE ..... **GI– 3**
SYMBOLS ..... **GI– 4**
NOTES, CAUTIONS, AND WARNINGS ..... **GI– 4**
FUNDAMENTAL PROCEDURES ..... **GI– 4**
PROTECTION OF THE VEHICLE ..... **GI– 4**
A WORD ABOUT SAFETY ..... **GI– 5**
PREPARATION OF TOOLS AND MEASURING EQUIPMENT ..... **GI– 5**
SPECIAL TOOLS ..... **GI– 5**
REMOVAL OF PARTS ..... **GI– 5**
DISASSEMBLY ..... **GI– 5**
REASSEMBLY ..... **GI– 6**
ADJUSTMENTS ..... **GI– 7**
RUBBER PARTS AND TUBING ..... **GI– 7**
JACK AND SAFETY STAND POSITIONS ..... **GI– 8**
VEHICLE LIFT (2-SUPPORT TYPE) POSITIONS ..... **GI– 8**
TOWING ..... **GI– 9**
IDENTIFICATION NUMBER LOCATIONS **GI–10**
UNITS **GI–10**
ABBREVIATIONS **GI–10**
CAUTION **GI–11**
INSTALLATION OF A MOBILE TWO-WAY RADIO SYSTEM **GI–11**
REMOVAL OF IGNITION KEY ON AUTOMATIC TRANSAXLE MODEL **GI–11**
ELECTRICAL TROUBLESHOOTING TOOLS **GI–12**
CAUTION WITH ELECTRICAL PARTS **GI–13**

03UGIX-001

Downloaded from www.Manualslib.com manuals search engine

IMPORTANT INFORMATION

BASIC ASSUMPTIONS

This workshop manual assumes that you have certain special tools that are necessary for the safe and efficient performance of service operations on Mazda vehicles and that you know how to use them properly. It also assumes that you are familiar with automobile systems and basic service and repair procedures. You should not attempt to use this manual unless these assumptions are correct and you understand the consequences described below.

SAFETY RISK

This manual contains certain notes, warnings, and other precautionary information that you should carefully read and follow to reduce the risk of personal injury to yourself or others and the risk of improper service that may damage the vehicle or render it unsafe. If there is no such information in regard to any specific service method, this does not mean there is no possibility that personal safety or vehicle safety will be jeopardized by the use of incorrect methods or tools.

POSSIBLE LOSS OF WARRANTY

The manufacturer's warranty on Mazda vehicles and engines can be voided if improper service or repairs are performed by persons other than those at an Authorized Mazda Dealer.

WARNING ON LUBRICANTS AND GREASES

Avoid all prolonged and repeated contact with mineral oils, especially used oils. Used oils contaminated during service (e.g., engine sump oils) are more irritating and more likely to cause serious effects, including skin cancer, in the event of gross and prolonged skin contact.

Wash skin thoroughly after work involving oil.
Protective hand cleaners may be of value provided they can be removed from the skin with water. Do not use gasoline, paraffin, or other solvents to remove oil from the skin.

Lubricants and greases may be slightly irritating to the eyes.

Repeated or prolonged skin contact should be avoided by wearing protective clothing if necessary. Particular care should be taken with used oils and greases containing lead. Do not allow work clothing to be contaminated with oil. Dry clean or launder such clothing at regular intervals.

9MUGIX-002

Downloaded from www.Manualslib.com manuals search engine

HOW TO USE THIS MANUAL

PREPARATION

PREPARATION points out the needed **Special Service Tool (SST)** for the service operation that it proceeds. Gather all necessary **SST** before beginning work.

Example:

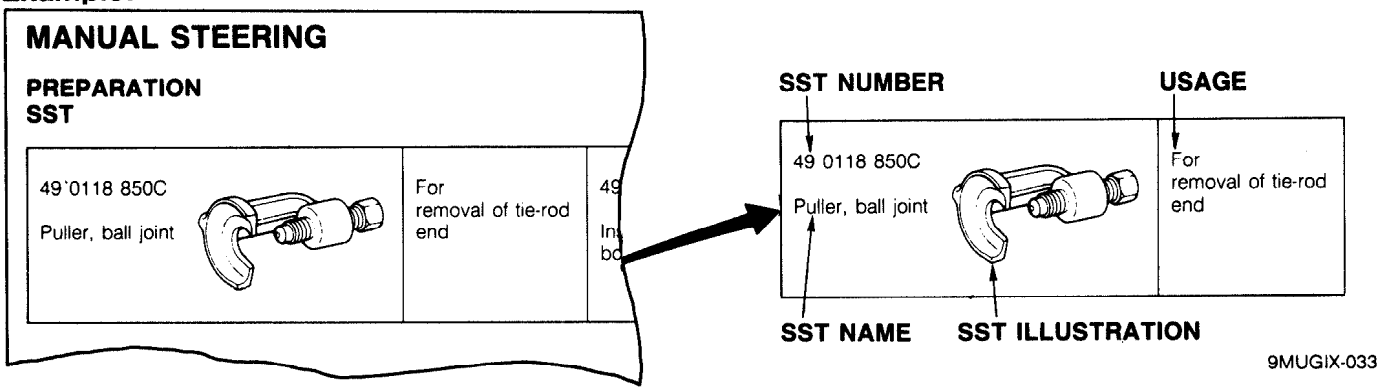

REPAIR PROCEDURE

1. Most repair operations begin with an overview illustration. It identifies the components, shows how the parts fit together, and visual parts inspections. If a damaged or worn part is found, repair or replace it as necessary.
2. Expendable parts, tightening torques, and symbols for oil, grease, and sealant are shown in the overview illustration.
3. Pages related to service procedures are shown under the illustration. Refer to this information when servicing the related part.

Example:

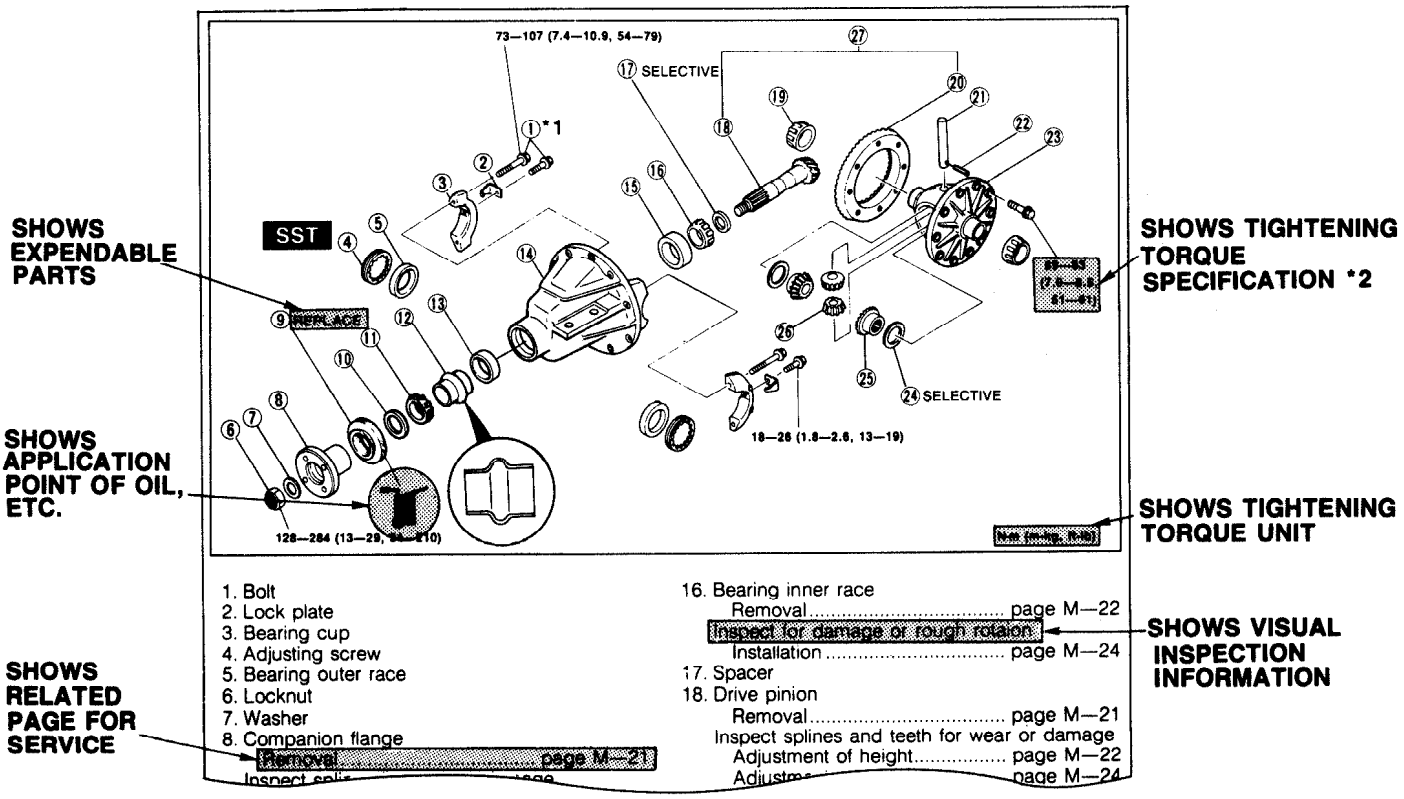

*1: The numbering (ex.①) shows service procedure.
*2: Units shown in N·m (m-kg, ft-lb) unless otherwise specified.

Downloaded from www.Manualslib.com manuals search engine

SYMBOLS

There are six symbols indicating oil, grease, and sealant. These symbols show the points of applying such materials during service.

Symbol	Meaning	Kind
	Apply oil	New engine oil or gear oil as appropriate
	Apply brake fluid	Only brake fluid
	Apply automatic transmission fluid	Only ATF
	Apply grease	Appropriate grease
	Apply sealant	Appropriate sealant
	Apply petroleum jelly	Appropriate petroleum jelly

05UGIX-005

Note

- **When special oil or grease is needed, this is shown in the illustration.**

NOTES, CAUTIONS, AND WARNINGS

As you read through the procedures, you will come across NOTES, CAUTIONS, and WARNINGS. Each one is there for a specific purpose. **NOTES** give you **added information** that will help you to complete a particular procedure. **CAUTIONS** are given to prevent you from making an error that could **damage the vehicle. WARNINGS** remind you to be especially careful in those areas where carelessness can cause **personal injury.** The following list contains some general WARNINGS you should follow when you work on a vehicle.

9MUGIX-036

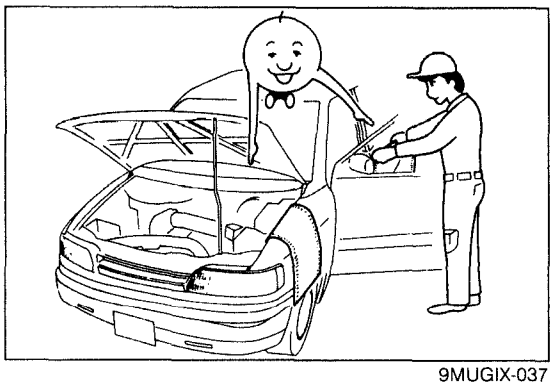

9MUGIX-037

FUNDAMENTAL PROCEDURES

PROTECTION OF THE VEHICLE

Always be sure to cover fenders, seats, and floor areas before starting work.

Downloaded from www.Manualslib.com manuals search engine

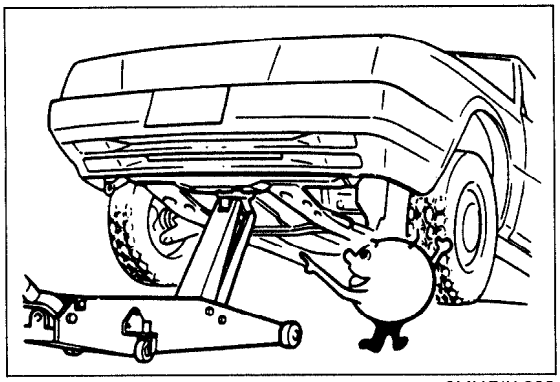

9MUGIX-003

A WORD ABOUT SAFETY

The following precautions must be followed when jacking up the vehicle.

1. Block the wheels.
2. Use only the specified jacking positions.
3. Support the vehicle with safety stands.

Start the engine only after making certain the engine compartment is clear of tools and people.

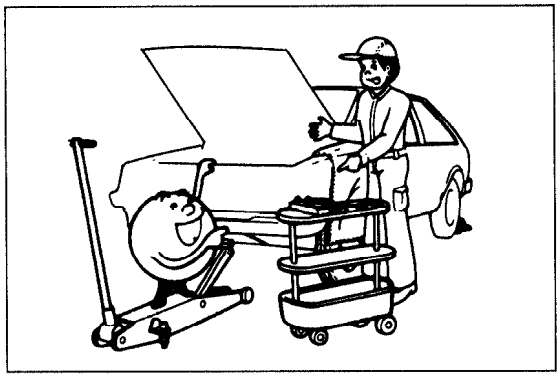

9MUGIX-038

PREPARATION OF TOOLS AND MEASURING EQUIPMENT

Be sure that all necessary tools and measuring equipment are available before starting any work.

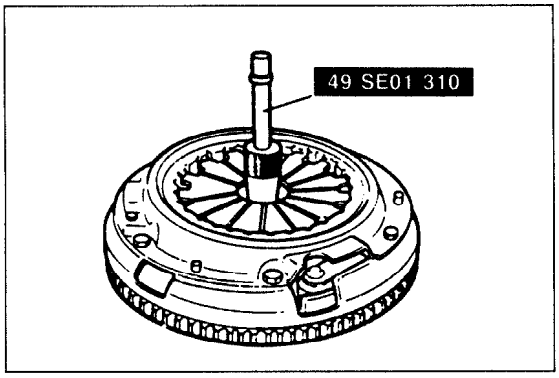

47U0GX-005

SPECIAL TOOLS

Use special tools when they are required.

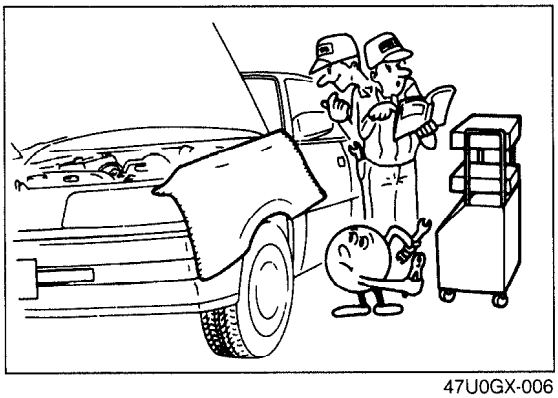

47U0GX-006

REMOVAL OF PARTS

While correcting a problem, try also to determine its cause. Begin work only after first learning which parts and subassemblies must be removed and disassembled for replacement or repair.

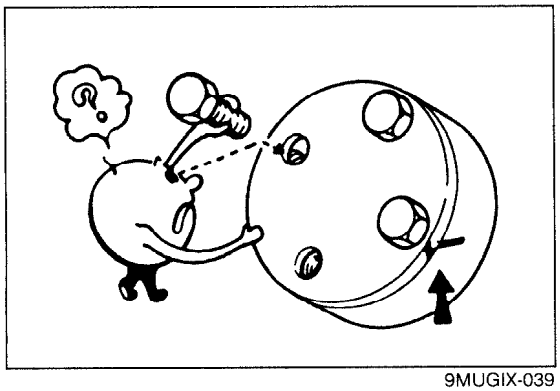

9MUGIX-039

DISASSEMBLY

If the disassembly procedure is complex, requiring many parts to be disassembled, all parts should be disassembled in a way that will not affect their performance or external appearance and identified so that reassembly can be performed easily and efficiently.

Downloaded from www.Manualslib.com manuals search engine

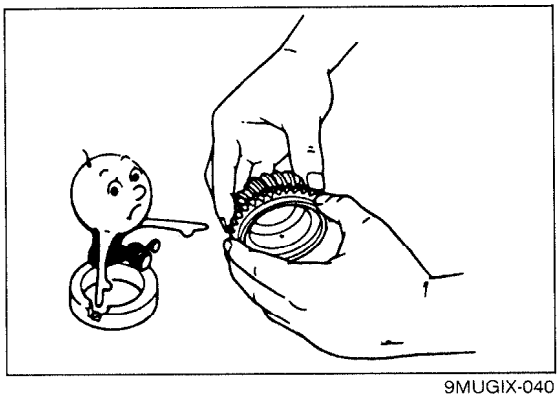

9MUGIX-040

1. Inspection of parts

When removed, each part should be carefully inspected for malfunctioning, deformation, damage, and other problems.

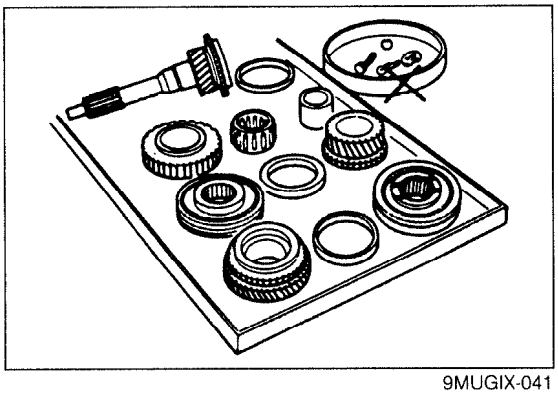

9MUGIX-041

2. Arrangement of parts

All disassembled parts should be carefully arranged for re-assembly.

Be sure to separate or otherwise identify the parts to be replaced from those that will be reused.

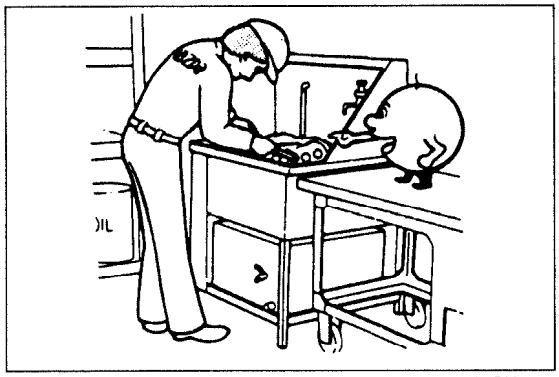

47U0GX-010

3. Cleaning parts for reuse

All parts to be reused should be carefully and thoroughly cleaned in the appropriate method.

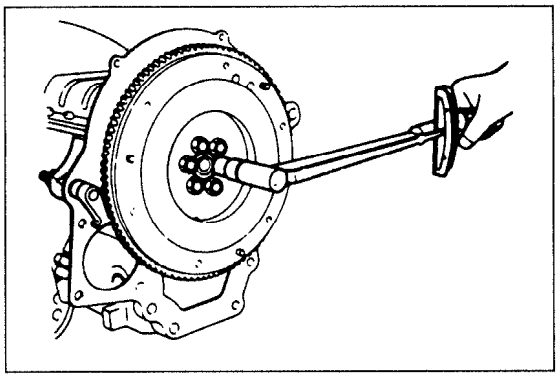

9MUGIX-004

REASSEMBLY

Standard values, such as torques and certain adjustments, must be strictly observed in the reassembly of all parts.

Refer to STANDARD BOLT AND NUT TIGHTENING TORQUE in Section TD for tightening torques not mentioned in the main text.

If removed, these parts should be replaced with new ones:

1. Oil seals	2. Gaskets
3. O-rings	4. Lock washers
5. Cotter pins	6. Nylon nuts

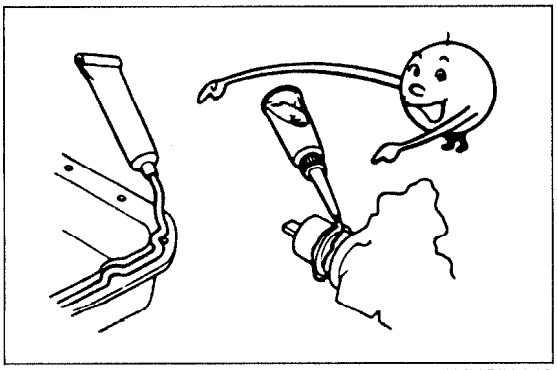

9MUGIX-042

Depending on location:

1. Sealant should be applied to gaskets.
2. Oil should be applied to the moving components of parts.
3. Specified oil or grease should be applied at the prescribed locations (such as oil seals) before reassembly.

Downloaded from www.Manualslib.com manuals search engine

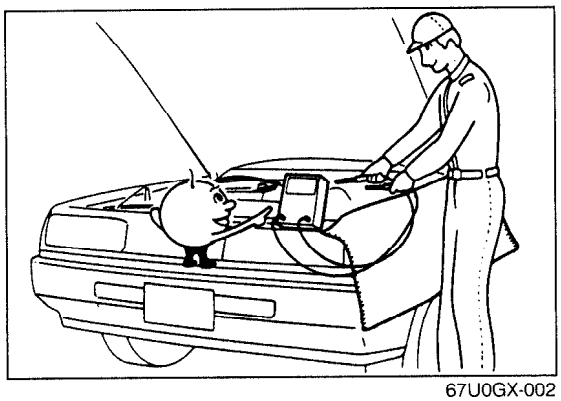

67U0GX-002

ADJUSTMENTS

Use suitable gauges and/or testers when making adjustments.

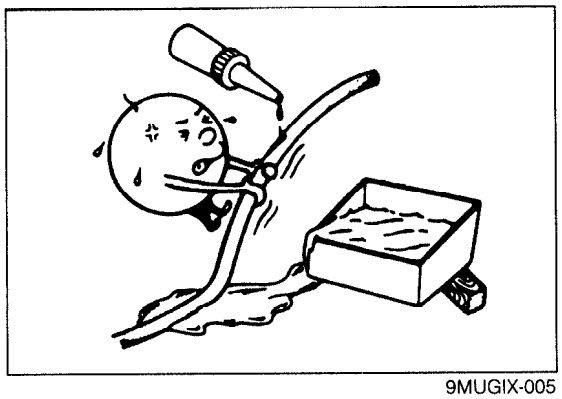

9MUGIX-005

RUBBER PARTS AND TUBING

Prevent gasoline or oil from getting on rubber parts or tubing.

Downloaded from www.Manualslib.com manuals search engine

JACK AND SAFETY STAND POSITIONS

FRONT END

Jack position:
At the front crossmember

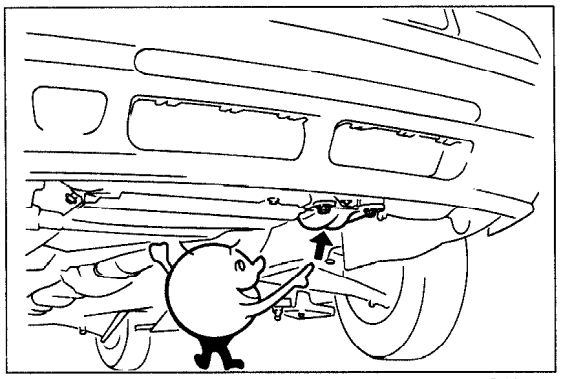

03UGIX-007

Safety stand positions:
On both sides of the body frame

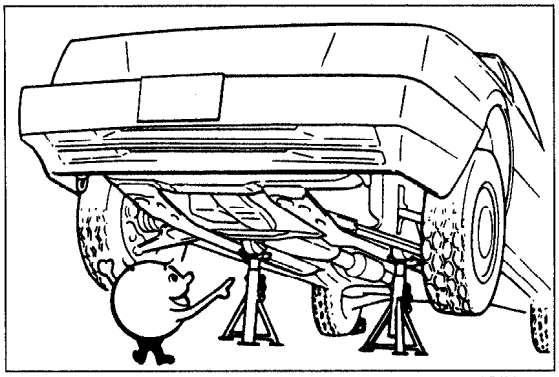

03UGIX-008

REAR END

Jack position:
At the center of the rear crossmember (2WD)
At the rear differential (4WD)

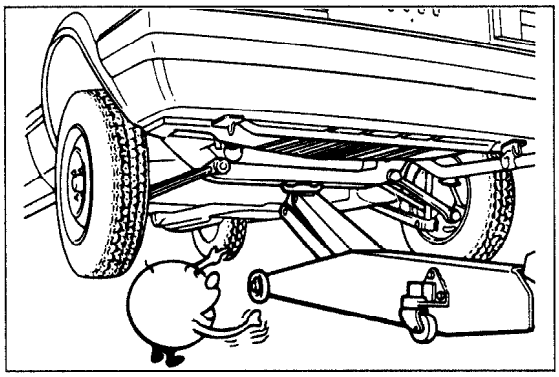

03UGIX-801

Safety stand positions:
On both sides of the body frame

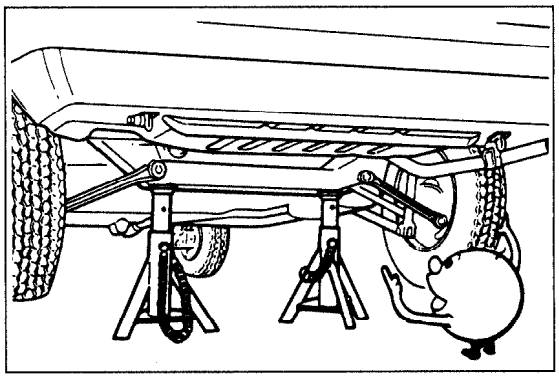

03UGIX-010

VEHICLE LIFT (2-SUPPORT TYPE) POSITIONS

FRONT END

Frame
Side sills

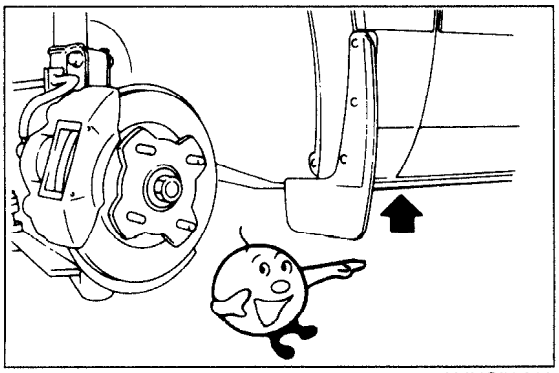

9MUGIX-010

REAR END

Frame
Side sills

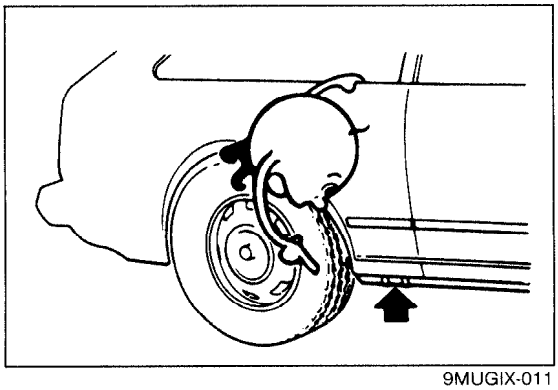

9MUGIX-011

Downloaded from www.Manualslib.com manuals search engine

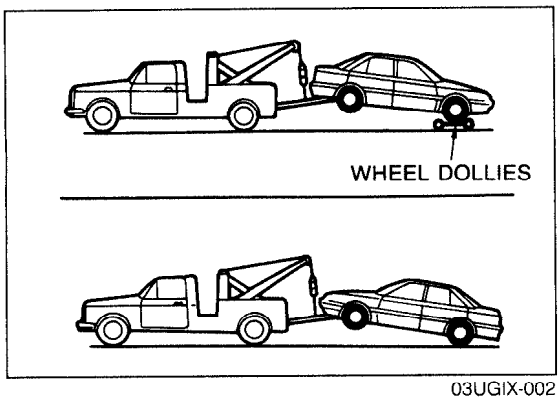

03UGIX-002

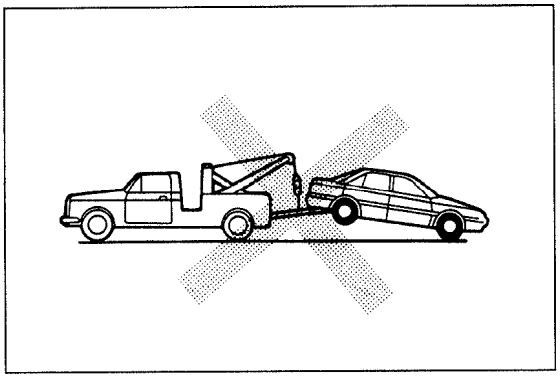

TOWING

Proper towing equipment is necessary to prevent damage to the vehicle.
Laws and regulations applicable to vehicles in tow must always be observed.
As a general rule, towed vehicles should be pulled with the driving wheels off the ground. If excessive damage or other conditions prevent towing the vehicle with the driving wheels off the ground, use wheel dollies.

With either automatic or manual transaxle:
1. Set the ignition switch in the ACC position;
2. Place the selector lever or shift lever in N (Neutral);
3. Release the parking brake.

Caution
- **Do not tow the vehicle backward with driving wheels on the ground. This may cause internal damage to the transaxles.**
- **Do not use the hook loops under the front and rear of the vehicle for towing purposes. These hook loops are designed ONLY for transport tie-down. If tie-down hook loops are used for towing, the front/rear bumper will be damaged.**

TIE-DOWN HOOKS — FRONT

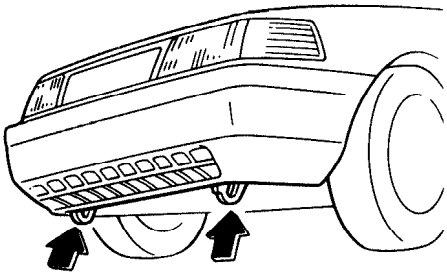

TIE-DOWN HOOKS — REAR

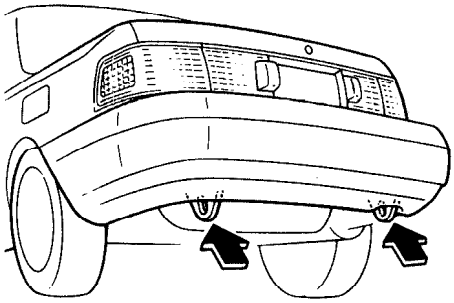

Downloaded from www.Manualslib.com manuals search engine

IDENTIFICATION NUMBER LOCATIONS

VEHICLE IDENTIFICATION NUMBER (VIN)

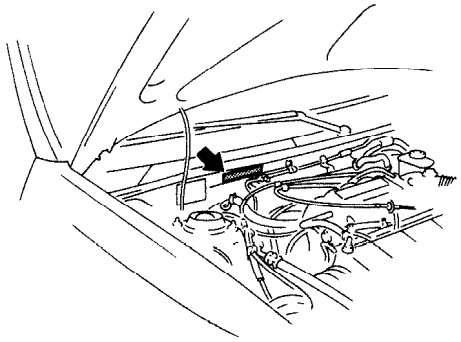

AUTOMATIC TRANSAXLE MODEL AND NUMBER

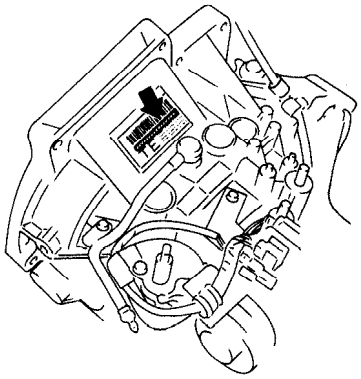

ENGINE MODEL AND NUMBER

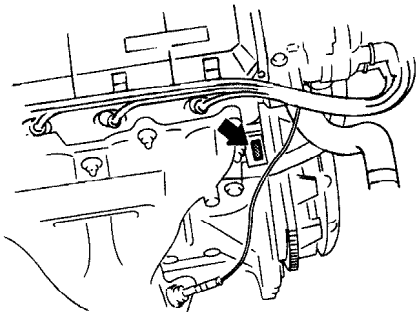

9MUGIX-015

UNITS

N·m (m-kg or cm-kg, ft-lb or in-lb)	Torque
rpm	Revolutions per minute
A	Ampere(s)
V	Volt(s)
Ω	Ohm(s) (resistance)
kPa (kg/cm^2, psi)	Pressure (usually positive)
mmHg (inHg)	Pressure (usually negative)
W	Watt
liters (US qt, Imp qt)	Volume
mm (in)	Length

89U0GX-006

ABBREVIATIONS

ABDC	After bottom dead center
A/C	Air conditioner
ACC	Accessories
ATX	Automatic transaxle
ATDC	After top dead center
ATF	Automatic transmission fluid
BAC	Bypass air control
BBDC	Before bottom dead center
BTDC	Before top dead center
CPU	Central processing unit
EC-AT	Electronically-controlled automatic transmission
ECU	Engine control unit
EGI	Electronic gasoline injection
E/L	Electrical load
EX	Exhaust
IC	Integrated circuit
IGN	Ignition
IN	Intake
INT	Intermittent
ISC	Idle speed control
LH	Left hand
M	Motor
MIL	Malfunction indicator lamp
MTX	Manual transaxle
OD	Overdrive
OFF	Switch off
ON	Switch on
PCV	Positive crankcase ventilation
PRC	Pressure regulator control
P/S	Power steering
P/W	Power window
RH	Right hand
SST	Special service tool
ST	Start
SW	Switch
TDC	Top dead center
4WD	4-wheel drive

03UGIX-802

Downloaded from www.Manualslib.com manuals search engine

CAUTION

INSTALLATION OF MOBILE TWO-WAY RADIO SYSTEM

If a mobile two-way radio system is installed improperly or if a high-powered type is used, the EGI system and other systems may be affected.

When the vehicle is to be equipped with a mobile two-way radio, observe the following precautions:

1. Install the antenna at the farthest point from control units.
2. Install the antenna feeder as far as possible from the control unit harnesses **(at least 30 cm [11.8 in])**.
3. Ensure that the antenna and feeder are properly adjusted.
4. Do not install a high-powered mobile two-way radio system.

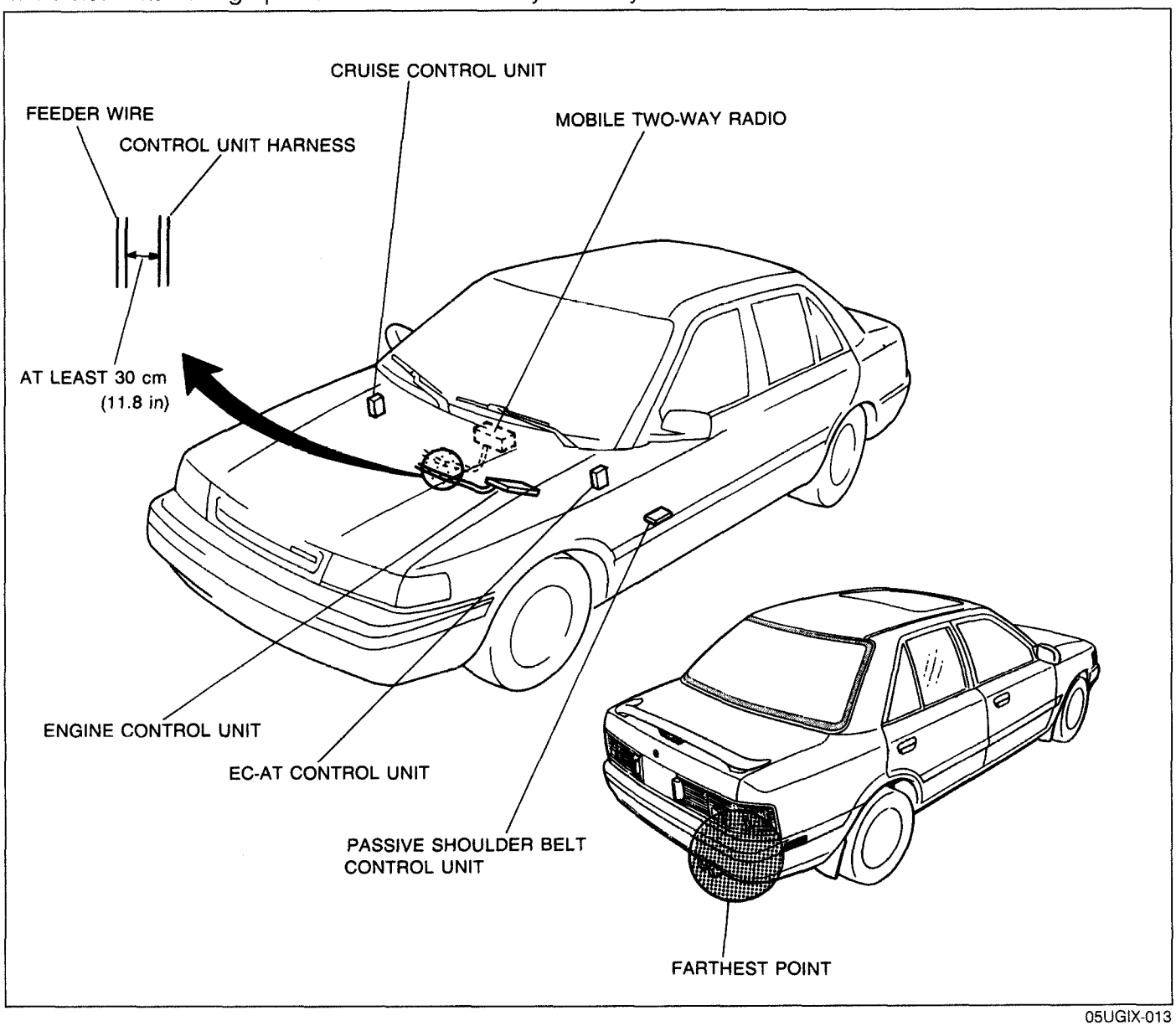

05UGIX-013

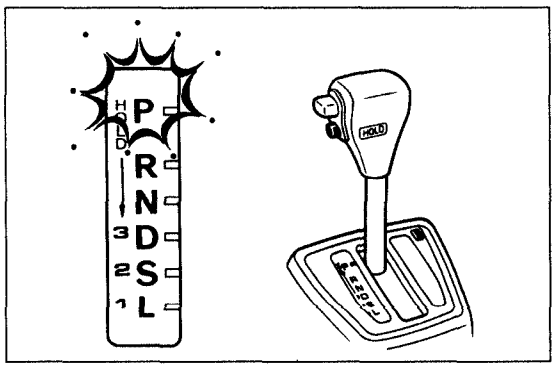

03UGIX-005

REMOVAL OF IGNITION KEY ON AUTOMATIC TRANSAXLE MODEL

The selector lever must be in P (PARK) to turn the ignition key to the OFF position. If the switch seems to be off but the key cannot be removed, the switch may still be in the ACC position, or the selector lever may not be in P (PARK). Shift the selector lever to P (PARK), and turn the ignition key to the LOCK position. The key should now be free for removal.

Downloaded from www.Manualslib.com manuals search engine

CAUTION

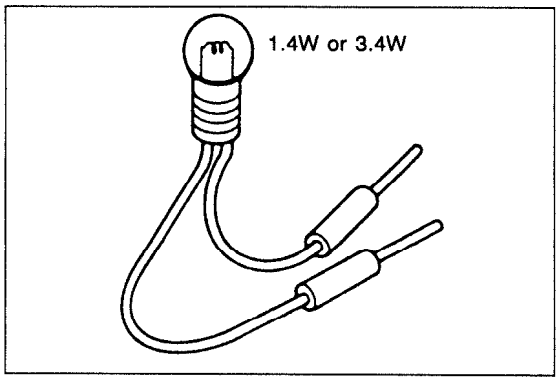

9MUGIX-019

ELECTRICAL TROUBLESHOOTING TOOLS

Test Light

The test light, as shown in the figure, uses a 12V bulb. The two lead wires should be connected to probes.
The test light is used for simple voltage checks and for checking for short circuits.

Caution

- **When checking the control unit, never use a bulb over 3.4W.**

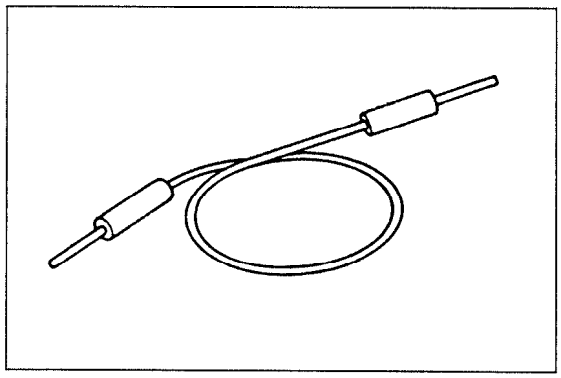

9MUGIX-020

Jumper Wire

The jumper wire is used for testing by shorting across switch terminals and ground connections.

Caution

- **Do not connect a jumper wire from the power source line to a body ground; this may cause burning or other damage to harnesses or electronic components.**

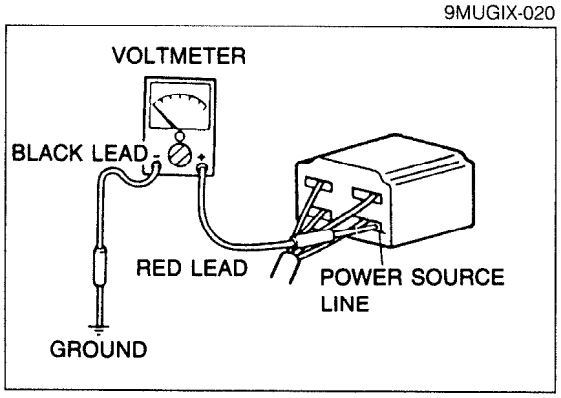

9MUGIX-021

Voltmeter

The DC voltmeter is used to measure of circuit voltage. A voltmeter with a range of 15V or more is used by connecting the positive (+) probe (red lead wire) to the point where voltage is to be measured and the negative (–) probe (black lead wire) to a body ground.

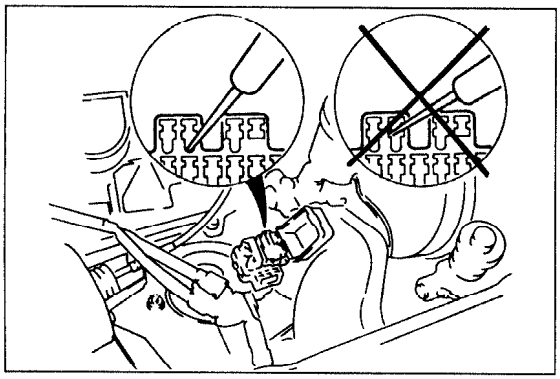

05UGIX-021

Diagnosis Connector

Insert the probe into the service hole when connecting a jumper wire to the diagnosis connector.

Caution

- **Do not insert the jumper wire probe into the diagnosis connector terminal, which may damage the terminal.**

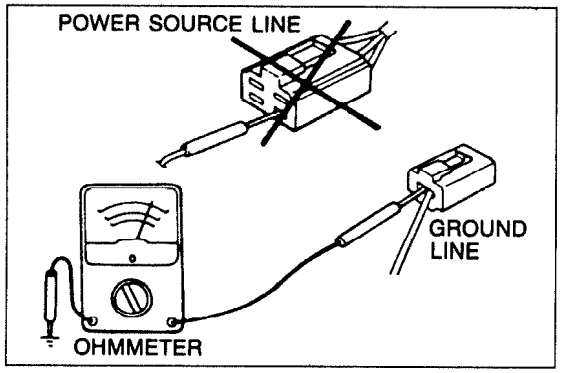

9MUGIX-045

Ohmmeter

The ohmmeter is used to measure the resistance between two points in a circuit and also to check for continuity and diagnosis of short circuits.

Caution

- **Do not attempt to connect the ohmmeter to any circuit to which voltage is applied; this may burn or otherwise damage the ohmmeter.**

Downloaded from www.Manualslib.com manuals search engine

CAUTION WITH ELECTRICAL PARTS

Battery Cable

Before disconnecting connectors or replacing electrical parts, disconnect the negative battery cable.

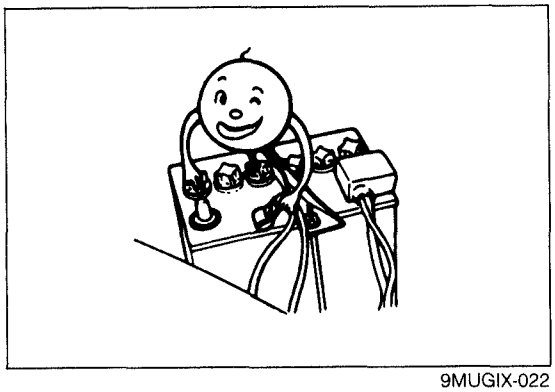

9MUGIX-022

Connectors

Removal of connector

Never pull on the wiring harness when disconnecting connectors.

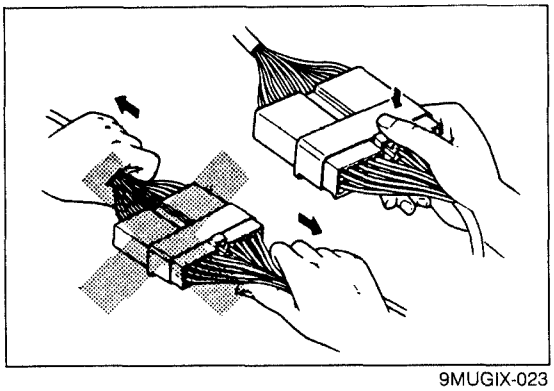

9MUGIX-023

Connectors can be removed by pressing or pulling the lock lever as shown.

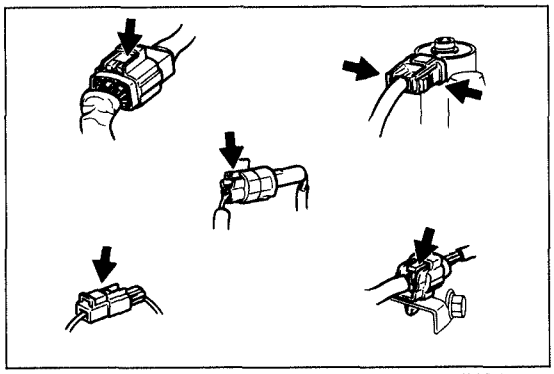

9MUGIX-024

Locking of connector

When locking connectors, make sure to listen for a click that will indicate they are securely locked.

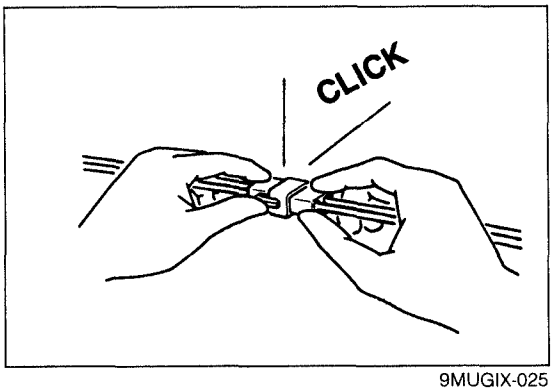

9MUGIX-025

Inspection

1. When a tester is used to check for continuity or to measure voltage, insert the tester probe from the wire harness side.

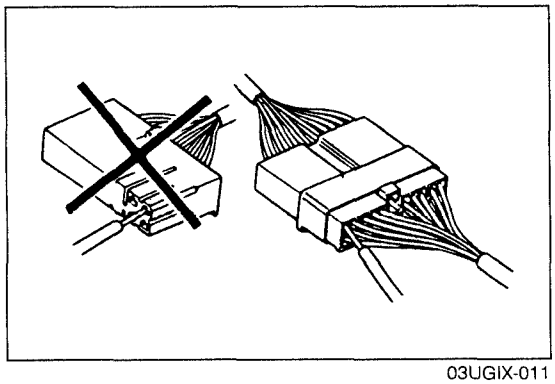

03UGIX-011

Downloaded from www.Manualslib.com manuals search engine

CAUTION

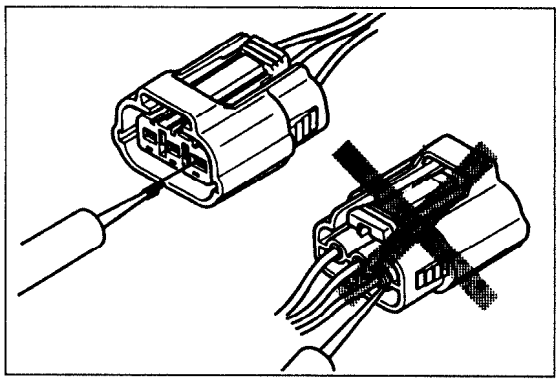

05UGIX-028

2. Check the terminals of waterproof connectors from the connector side, as they cannot be accessed from the wire harness side.

Caution
- **Use fine wire to prevent damage to the terminal.**
- **Do not damage the terminal when inserting the tester lead.**

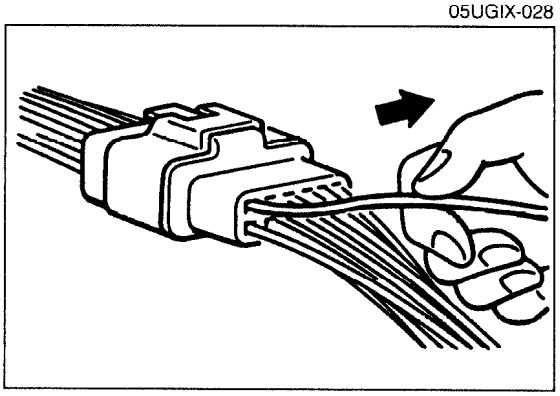

9MUGIX-027

Terminals
Inspection
Pull lightly on individual wires to check that they are secured in the terminal.

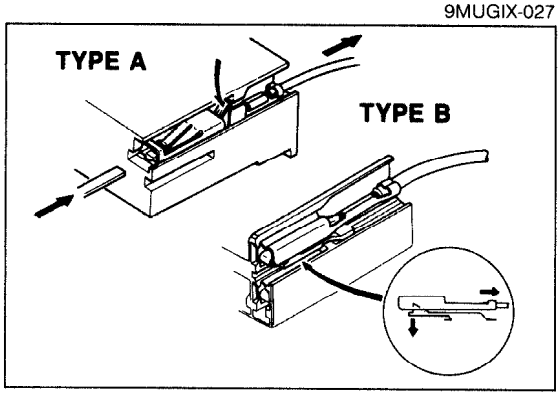

9MUGIX-028

Replacement of terminals
Use the appropriate tools to remove the terminal as shown. When installing the terminal, be sure to insert it until it locks securely.

<Female>
Insert a thin piece of metal from the terminal side of the connector, and then, with the terminal locking tab pressed down, pull the terminal out from the connector.

<Male>
Same as the female type.

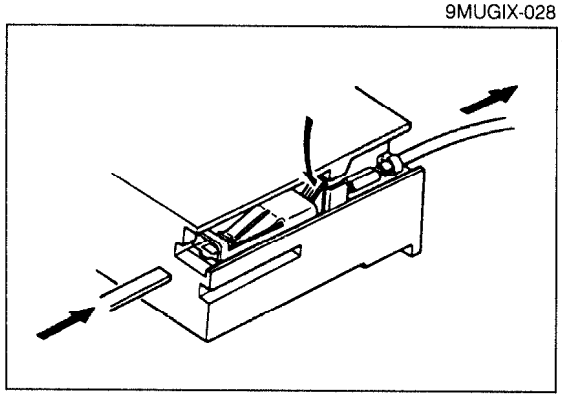

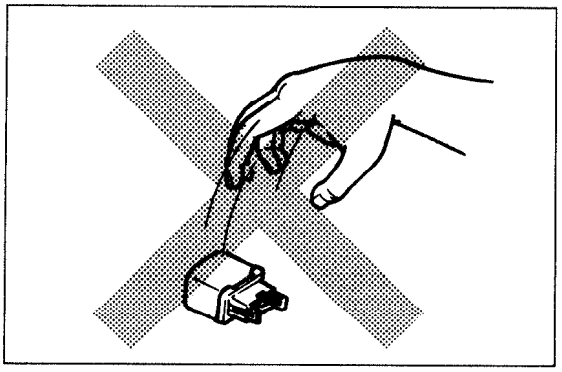

9MUGIX-030

Sensors, Switches, and Relays
Handle sensors, switches, and relays carefully. Do not drop them or strike them against other parts.

Downloaded from www.Manualslib.com manuals search engine

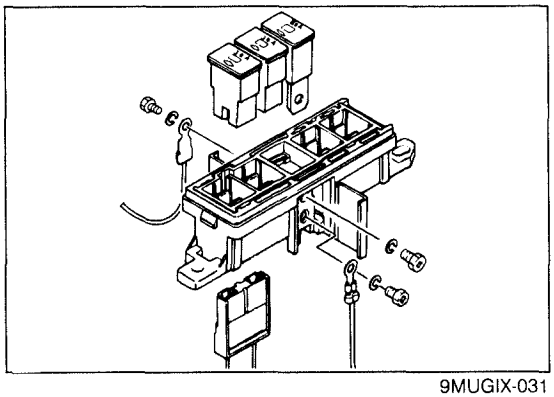

9MUGIX-031

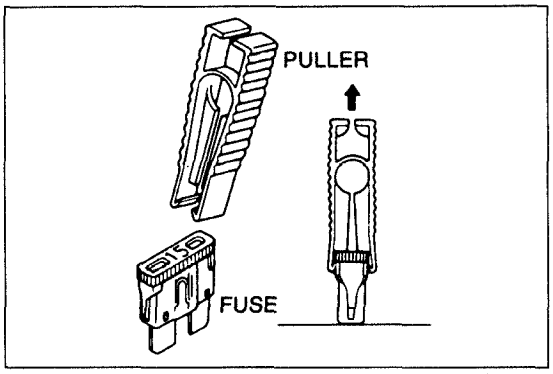

9MUGIX-032

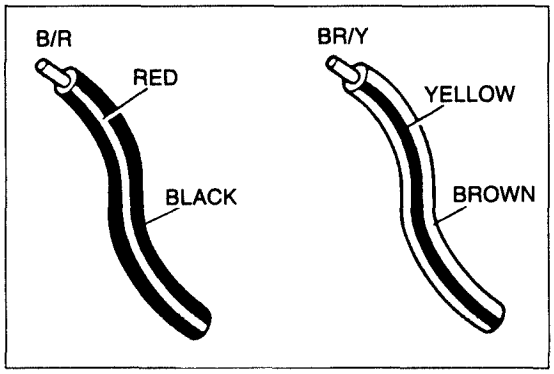

9MUGIX-029

Fuse Replacement

1. When replacing a fuse, be sure to replace it with one of specified capacity.
   If a fuse again fails after it has been replaced, the circuit probably has a short circuit and the wiring should be checked.
2. Be sure the negative battery terminal is disconnected before replacing a main fuse (80A).
3. When replacing a pullout fuse, use the fuse puller supplied in the fuse box cover.

Wiring Harness

Wiring color codes

Two-color wires are indicated by a two-color code symbol. The first letter indicates the base color of the wire and the second the color of the stripe.

CODE	COLOR		CODE	COLOR
B	Black		O	Orange
BR	Brown		P	Pink
G	Green		R	Red
GY	Gray		V	Violet
L	Blue		W	White
LB	Light Blue		Y	Yellow
LG	Light Green		—	—

Downloaded from www.Manualslib.com manuals search engine

Downloaded from www.Manualslib.com manuals search engine

PRE-DELIVERY INSPECTION AND SCHEDULED MAINTENANCE SERVICES

PRE-DELIVERY INSPECTION ..... **A– 2**
PRE-DELIVERY INSPECTION TABLE..... **A– 2**
SCHEDULED MAINTENANCE SERVICES ..... **A– 3**
SCHEDULE 1
(NORMAL DRIVING CONDITION)..... **A– 3**
SCHEDULE 2
(UNIQUE DRIVING CONDITION)..... **A– 6**

9MU0AX-001

Downloaded from www.Manualslib.com manuals search engine

PRE-DELIVERY INSPECTION

PRE-DELIVERY INSPECTION TABLE

EXTERIOR

INSPECT and **ADJUST**, if necessary, the following items to the specifications:
- ☐ Glass, exterior bright metal and paint for damage
- ☐ Wheel lug nuts
  88—118 N·m (9—12 m-kg, 65—87 ft-lb)
- ☐ Tire pressures (Refer to section Q)
- ☐ All weatherstrips for damage or detachment
- ☐ Operation of hood release and lock
- ☐ Operation of trunk lid, back door, and fuel lid opener
- ☐ Door operation and alignment
- ☐ Headlight aiming

INSTALL the following parts:
- ☐ Wheel caps or rings (if equipped)
- ☐ Outside rear view mirror(s)

UNDER HOOD—ENGINE OFF

INSPECT and **ADJUST**, if necessary, the following items to the specifications:
- ☐ Fuel, coolant and hydraulic lines, fittings, connections and components for leaks
- ☐ Engine oil level
- ☐ Power steering fluid level
- ☐ Brake and clutch master cylinder fluid level
- ☐ Windshield washer reservoir fluid level
- ☐ Radiator coolant level and specific gravity

Protection °C (°F)	Specific gravity at 20°C (68°F)
−16 (3)	1.054
−26 (−15)	1.066
−40 (−40)	1.078

- ☐ Tightness of water hose clamps (including heater hoses)
- ☐ Tightness of battery terminals
- ☐ Manual transaxle oil level
- ☐ Drive belt tensions
- ☐ Accelerator cable and its linkage for free movement

CLEAN spark plugs

INTERIOR

INSTALL the following parts:
- ☐ Rubber stopper for inside rear view mirror
- ☐ Fuse for accessories

CHECK the operations of the following items:
- ☐ Seat controls (sliding and reclining) and head restraint
- ☐ Folding rear seat
- ☐ Door locks including childproof door locks (if equipped)
- ☐ Seat belts and warning system
- ☐ Ignition switch and steering lock
- ☐ Inhibitor switch (ATX only)
- ☐ Starter interlock switch (clutch pedal, MTX only)
- ☐ All lights including warning and indicator lights
- ☐ Sound warning system
- ☐ Horn, wipers and washers (front and rear, if equipped)
- ☐ Audio system (if equipped)
- ☐ Cigarette lighter and clock
- ☐ Heater, defroster and air conditioner at various mode selection (if equipped)

CHECK the following items:
- ☐ Presence of spare fuse
- ☐ Upholstery and interior finish

CHECK and **ADJUST**, if necessary, the following items:
- ☐ Operation and fit of windows
- ☐ Pedal height and free play of brake and clutch pedal

	Pedal height mm (in)	Free play mm (in)
Clutch pedal	196—204 (7.72—8.03) (with carpet)	5—13 (0.197—0.512)
Brake pedal	193—196 (7.60—7.72)	4—7 (0.16—0.28)

- ☐ Parking brake
  5—7 notches/98 N (10 kg, 22lb)

UNDER HOOD—ENGINE RUNNING AT OPERATING TEMPERATURE

CHECK the following items:
- ☐ Automatic transaxle fluid level
- ☐ Initial ignition timing (with TEN terminal of diagnosis connector grounded)
  5 ± 1° BTDC: BP SOHC
- ☐ Idle speed (ATX: P range, MTX: Neutral)
  750 ± 50 rpm: (With parking brake applied)

ON HOIST

CHECK the following items:
- ☐ Underside fuel, coolant and hydraulic lines, fittings, connections and components for leaks
- ☐ Tires for cuts or bruises
- ☐ Steering linkage, suspension, exhaust system and all underside hardware for looseness or damage

ROAD TEST

CHECK the following items:
- ☐ Brake operation
- ☐ Clutch operation
- ☐ Steering control
- ☐ Operation of meters and gauge
- ☐ Squeaks, rattles or unusual noise
- ☐ Engine general performance
- ☐ Emergency locking retractors
- ☐ Cruise control system (if equipped)

AFTER ROAD TEST

REMOVE seat and floor mat protective covers

CHECK for necessary owner information materials, tools and spare tire in vehicle

03U0AX-801

Downloaded from www.Manualslib.com manuals search engine

SCHEDULED MAINTENANCE SERVICES

Follow Schedule 1 (Normal Driving Condition) if the vehicle is mainly operated where none of the following conditions apply.
Follow Schedule 2 (Unique Driving Condition) if any of the conditions below apply:

- Repeated short-distance driving.
- Driving in dusty conditions.
- Driving with extended use of brakes.
- Driving in areas where using road salt or other corrosive materials are used.
- Driving on rough and/or muddy roads.
- Extended periods of idling and/or low-speed operation.
- Driving for prolonged periods in cold temperatures and/or extremely humid climates.

Schedule 1 (Normal Driving Conditions)

MAINTENANCE INTERVALS / MAINTENANCE OPERATION	Number of months or miles (kilometers), whichever comes first								Service data and inspection points	Page
	Months	7.5	15	22.5	30	37.5	45	52.5	60		
	×1,000 miles	7.5	15	22.5	30	37.5	45	52.5	60		
	×1,000 km	12	24	36	48	60	72	84	96		
Drive belts					I				I	• Cracks or damage • Tension	B1–5*
Engine oil		R	R	R	R	R	R	R	R	• Oil pan capacity: All BP 3.6 liters (3.8 US qt, 3.2 Imp qt)	D–5*
Oil filter		R	R	R	R	R	R	R	R	• Oil filter capacity: 0.17 liter (0.18 US qt, 0.15 Imp qt)	D–5*
Engine timing belt*1	Replace every 60,000 miles (96,000 km)									—	B1–12*
Air cleaner element					R				R	—	F–71*
Spark plugs					R				R	• Plug gap: 1.0—1.1mm (0.039—0.043 in) • Recommended spark plugs Engine: BP SOHC; NGK: BKR5E-11, BKR6E-11; Nippon Denso: K16PR-U11, K20PR-U11	G–18*
Cooling system					I				I	• Hoses for cracks or wear • Coolant level	E–5*
Engine coolant					R				R	• Coolant capacity: 5.0 liters (5.3 US qt, 4.4 Imp qt)..... MTX 6.0 liters (6.3 US qt, 5.3 Imp qt) ..... ATX	E–6*
Fuel filter									R	—	F–107*
Idle speed					A*2				A	• ATX: P range, MTX: Neutral 750 ± 50 rpm (With parking brake applied)	F–71*
Fuel lines					I*3				I	• Fittings, connections, and components for leaks	F–9

* Indicates page to be referred to on 323 Workshop Manual (1195-10-89E)

Downloaded from www.Manualslib.com manuals search engine

Schedule 1 (Normal Driving Conditions) (Cont'd)

MAINTENANCE INTERVALS / MAINTENANCE OPERATION	Number of months or miles (kilometers), whichever comes first									Service data and inspection points	Page
	Months	7.5	15	22.5	30	37.5	45	52.5	60		
	×1,000 miles	7.5	15	22.5	30	37.5	45	52.5	60		
	×1,000 km	12	24	36	48	60	72	84	96		
Brake lines, hoses and connections					I				I	• Proper attachment and connections	—
Clutch pedal					I				I	• Operation • Pedal height (with carpet): 196—204mm (7.72—8.03 in) • Free play: 5—13mm (0.197—0.512 in)	H–5
Disc brake					I				I	• Caliper operation • Disc plate thickness: Minimum.... Front 20mm (0.79 in) Rear 7.0mm (0.28 in) • Pad thickness: Minimum.... Front 2.0mm (0.08 in) Rear 1.0mm (0.04 in)	 P–20* P–25* P–18* P–25*
Steering operation and linkage					I				I	• Operation and looseness • Fluid leakage or oozing • Free play.... 0—30mm (0—1.18 in)	N–18* N–8*
Front suspension ball joints					I				I	• Damage, looseness, and grease leakage	—
Driveshaft dust boots					I				I	• Cracking and damage	M–7
Bolts and nuts on chassis and body					T				T	• Retighten all loose nuts and bolts	—
Exhaust system heat shield					I				I	• Insulation clearance	F–15
Air conditioner system (if equipped)	Refrigerant	Inspect refrigerant amount annually								—	U–34*
	Compressor	Inspect operation annually								—	U–38*
Rear differential oil									R	• Oil capacity: 0.5 liter (0.53 US qt, 0.44 Imp qt)	M–17
Transfer oil									R	• Oil capacity: 0.65 liter (0.69 US qt, 0.57 Imp qt)	J3–12 K2–136

* Indicates page to be referred to on 323 Workshop Manual (1195-10-89E)

Downloaded from www.Manualslib.com manuals search engine

Note
I .... Inspect, and if necessary correct, clean, or replace
A.... Adjust
R.... Replace or change
T.... Tighten

After 60 months or 60,000 miles (96,000 km), continue to follow the described maintenance at the recommended intervals.

As for * marked items in this maintenance chart, note the following points:
*1 Replacement of the timing belt is required every 60,000 miles (96,000 km). Failure to replace the timing belt may result in damage to the engine.
*2 This maintenance is required for all states except California. However, we recommend that it also be performed on California vehicles.
*3 This maintenance is recommended by Mazda. However, it is not necessary for emission warranty coverage or manufacturer recall liability.

Downloaded from www.Manualslib.com manuals search engine

Schedule 2 (Unique Driving Conditions)

MAINTENANCE OPERATION \ MAINTENANCE INTERVALS	Number of months or miles (kilometers), whichever comes first												Service data and inspection points	Page
	Months	5	10	15	20	25	30	35	40	45	50	55	60		
	×1,000 miles	5	10	15	20	25	30	35	40	45	50	55	60		
	×1,000 km	8	16	24	32	40	48	56	64	72	80	88	96		
Drive belts							I						I	• Cracks or damage • Tension	B1–5*
Engine oil		R	R	R	R	R	R	R	R	R	R	R	R	• Oil pan capacity: All BP 3.6 liters (3.8 US qt, 3.2 Imp qt)	D–5*
Oil filter		R	R	R	R	R	R	R	R	R	R	R	R	• Oil filter capacity: 0.17 liter (0.18 US qt, 0.15 Imp qt)	D–5*
Engine timing belt*1		Replace every 60,000 miles (96,000 km)												—	B1–12*
Air cleaner element				I*2			R			I*2			R	—	F–71*
Spark plugs							R						R	• Plug gap: 1.0—1.1mm (0.039—0.043 in) • Recommended spark plugs Engine: BP SOHC; NGK: BKR5E-11, BKR6E-11; Nippon Denso: K16PR-U11, K20PR-U11	G–18*
Cooling system							I						I	• Hoses for cracks or wear • Coolant level	E–5*
Engine coolant							R						R	• Coolant capacity: 5.0 liters (5.3 US qt, 4.4 Imp qt)..... MTX 6.0 liters (6.3 US qt, 5.3 Imp qt) ..... ATX	E–6*
Idle speed							A*2						A	• ATX: P range, MTX: Neutral 750 ± 50 rpm (With parking brake applied)	F–71*
Fuel filter													R	—	F–107*
Fuel lines							I*3						I	• Fittings, connections, and components for leaks	F–9
Brake lines, hoses and connections							I						I	• Proper attachment and connections	—
Clutch pedal							I						I	• Operation • Pedal height (with carpet): 196—204mm (7.72—8.03 in) • Free play 5—13mm (0.197—0.512 in)	H–5
Disc brake				I			I			I			I	• Caliper operation • Disc plate thickness: Minimum Front.... 20mm (0.79 in) Rear..... 7.0mm (0.28 in) • Pad thickness: Minimum Front.... 2.0mm (0.08 in) Rear..... 1.0mm (0.04 in)	P–20* P–25* P–18* P–25*

* Indicates page to be referred to on 323 Workshop Manual (1195-10-89E)

Downloaded from www.Manualslib.com manuals search engine

Schedule 2 (Unique Driving Conditions) (Cont'd)

MAINTENANCE INTERVALS / MAINTENANCE OPERATION	Number of months or miles (kilometers), whichever comes first												Service data and inspection points	Page
	Months	5	10	15	20	25	30	35	40	45	50	55	60		
	×1,000 miles	5	10	15	20	25	30	35	40	45	50	55	60		
	×1,000 km	8	16	24	32	40	48	56	64	72	80	88	96		
Steering operation and linkage							I						I	• Operation and looseness • Fluid leakage or oozing • Free play.... 0—30mm (0—1.18 in)	N–18* N–8*
Front suspension ball joint							I						I	• Damage looseness and grease leakage	—
Driveshaft dust boots							I						I	• Cracking and damage	M–7
Bolts and nuts on chassis and body				T			T			T			T	• Retighten all loose nuts and bolts	—
Exhaust system heat shield							I						I	• Insulator clearance	F–15
Air conditioner system (if equipped)	Refrigerant	Inspect refrigerant amount annually												—	U–34*
	Compressor	Inspect operation annually												—	U–38*
Rear differential oil													R	• Oil capacity 0.5 liter (0.53 US qt, 0.44 Imp qt)	M–17
Transfer oil							R						R	• Oil capacity 0.65 liter (0.69 US qt, 0.57 Imp qt)	J3–12 K2–136

* Indicates page to be referred to on 323 Workshop Manual (1195-10-89E)

Downloaded from www.Manualslib.com manuals search engine

Note
I.... Inspect, and if necessary correct, clean, or replace
A.... Adjust
R.... Replace or change
T.... Tighten

After 60 months or 60,000 miles (96,000 km), continue to follow the described maintenance at the recommended intervals.

As for * marked items in this maintenance chart, note the following points:
*1 Replacement of the timing belt is required every 60,000 miles (96,000 km). Failure to replace the timing belt may result in damage to the engine.
*2 This maintenance is required for all states except California. However, we recommend that it also be performed on California vehicles.
*3 This maintenance is recommended by Mazda. However, it is not necessary for emission warranty coverage or manufacturer recall liability.

Downloaded from www.Manualslib.com manuals search engine

ENGINE (SOHC)

INDEX ..... **B– 2**

FEATURES

OUTLINE ..... **B– 3**
OUTLINE OF CONSTRUCTION ..... **B– 3**
SPECIFICATIONS ..... **B– 3**
INTERCHANGEABILITY ..... **B– 4**
FLYWHEEL ..... **B– 5**

SERVICE

SUPPLEMENTAL SERVICE INFORMATION .. **B– 6**
REMOVAL ..... **B– 6**
PROCEDURE ..... **B– 6**
INSTALLATION **B–14**
PROCEDURE **B–14**

03U0BX-801

Downloaded from www.Manualslib.com manuals search engine

INDEX

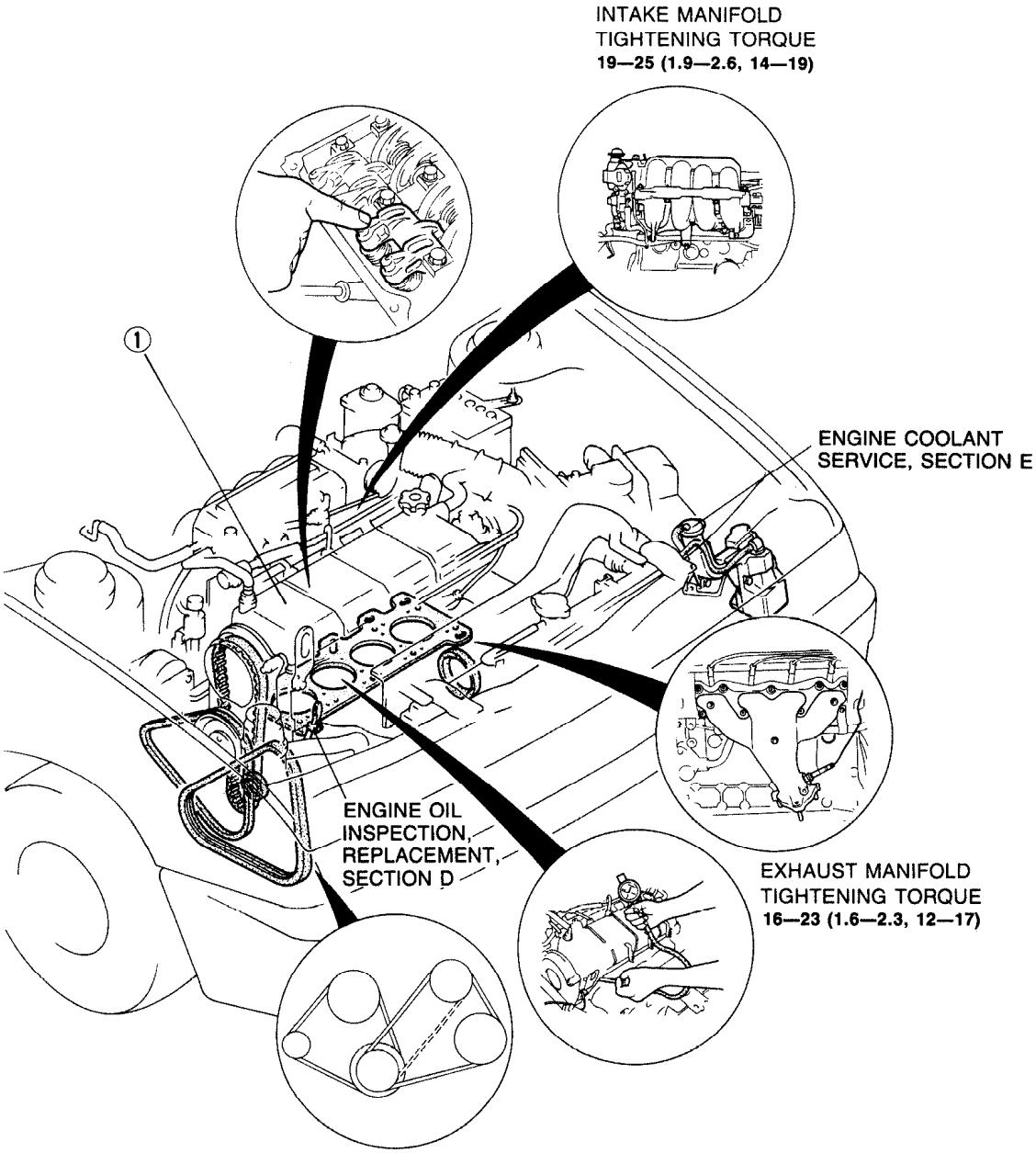

DEFLECTION AT (98 N, 10 kg, 22 lb) mm (in)

DRIVE BELT	NEW	USED
ALTERNATOR	8.0—9.0 (0.31—0.35)	9.0—10.0 (0.35—0.39)
P/S, P/S + A/C	8.0—9.0 (0.31—0.35)	9.0—10.0 (0.35—0.39)

COMPRESSION kPa (kg/cm^2, psi)-rpm

	BP SOHC
STANDARD	1,197 (12.2, 173)-300
MINIMUM	834 (8.5, 121)-300

N·m (m-kg, ft-lb)

03U0BX-802

1. Engine
Removal ..... page B– 6
Installation..... page B–14

Downloaded from www.Manualslib.com manuals search engine

OUTLINE

OUTLINE OF CONSTRUCTION

The BP SOHC engine for the 4WD model is the same as for the 2WD model, except that the flywheel is shaped differently.

03U0BX-803

SPECIFICATIONS

Item \ Engine				BP SOHC
Type				Gasoline, 4-cycle
Cylinder arrangement and number				In-line, 4 cylinders
Combustion chamber				Pentroof
Valve system				OHC, belt-driven
Displacement			cc (cu in)	1,839 (112.2)
Bore and stroke			mm (in)	83.0 x 85.0 (3.27 x 3.35)
Compression ratio				8.9
Compression pressure			kPa (kg/cm^2, psi)-rpm	1,197 (12.2, 173)-300
Valve timing	IN	Open	BTDC	2°
		Close	ABDC	50°
	EX	Open	BBDC	55°
		Close	ATDC	8°
Valve clearance		IN	mm (in)	0: Maintenance-free
		EX		0: Maintenance-free
Idle speed*1*2		MTX	rpm	750 ± 50
		ATX		750 ± 50
Ignition timing*2			BTDC	5° ± 1°
Firing order				1—3—4—2

03U0BX-804

*1...With parking brake applied. (Canada)
*2...TEN terminal of diagnosis connector grounded.

Downloaded from www.Manualslib.com manuals search engine

INTERCHANGEABILITY

The following chart shows interchangeability of the main parts of the BP SOHC engine for the 4WD model and the 2WD model.

Symbols: ○ .... Interchangeable X .... Not interchangeable

Part name			Interchangeability	Remark
Cylinder block related	Cylinder head		○	
	Camshaft oil seal		○	
	Cylinder head bolt		○	
	Cylinder head gasket		○	
	Cylinder head cover		○	
	Cylinder head cover gasket		○	
	Cylinder block		○	
	Main bearing cap		○	
	Main bearing support plate		○	
	Oil pan		○	
	Timing belt cover		○	
	Front oil seal		○	
	Rear oil seal		○	
Crankshaft related	Crankshaft		○	
	Main bearing		○	
	Thrust bearing		○	
	Connecting rod and cap		○	
	Connecting rod bearing		○	
	Piston		○	
	Piston pin		○	
	Piston ring		○	
	Crankshaft pulley		○	
	Rear cover		○	
	Flywheel		X	Shape different
	Flywheel bolt		○	
Timing belt related	Timing belt		○	
	Timing belt crank pulley		○	
	Camshaft pulley		○	
	Timing belt tensioner and spring		○	
Valve related	Camshaft		○	
	Rocker arm		○	
	Rocker arm shaft		○	
	HLA		○	
	Valve	Intake	○	
		Exhaust	○	
	Valve spring and seat	Intake	○	
		Exhaust	○	
	Valve guide		○	
	Valve seal		○	
Lubrication system related	Oil pump		○	
	Oil pump gasket		○	
	Oil strainer		○	
	Oil strainer gasket		○	
	Oil jet		○	
	Oil filter		○	
Cooling system related	Water pump		○	
	Thermostat		○	
	Radiator		X	Specification different
	Cooling fan		X	Specification different

03U0BX-805

Downloaded from www.Manualslib.com manuals search engine

FLYWHEEL

4WD MODEL

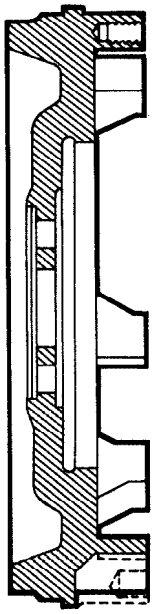

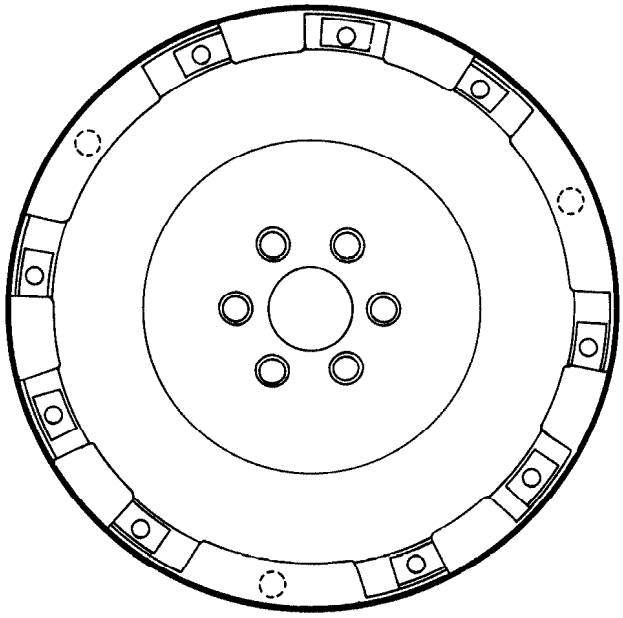

2WD MODEL

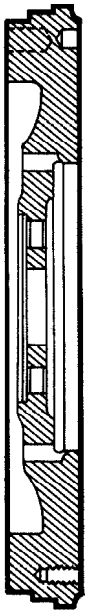

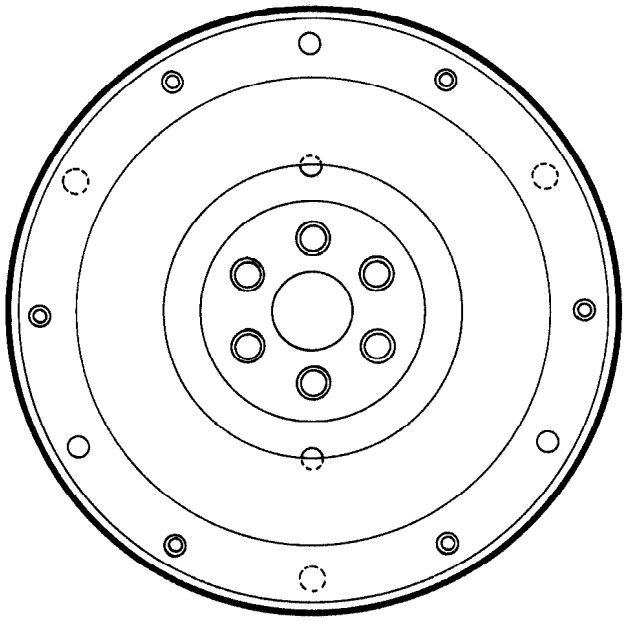

03U0BX-806

The flywheel is shaped differently to accommodate the redesigned clutch disc and clutch cover.

Downloaded from www.Manualslib.com manuals search engine

SUPPLEMENTAL SERVICE INFORMATION

The following points in this section are changed in comparison with Workshop Manual (1195-10-89E).

Engine
- Removal
- Installation

03U0BX-807

REMOVAL

Warning
- **Release the fuel pressure.**

PROCEDURE
1. Disconnect the negative battery cable.
2. Drain the engine coolant and transaxle oil.
3. Remove in the order shown in the figure, referring to **Removal Note**.

Step 1

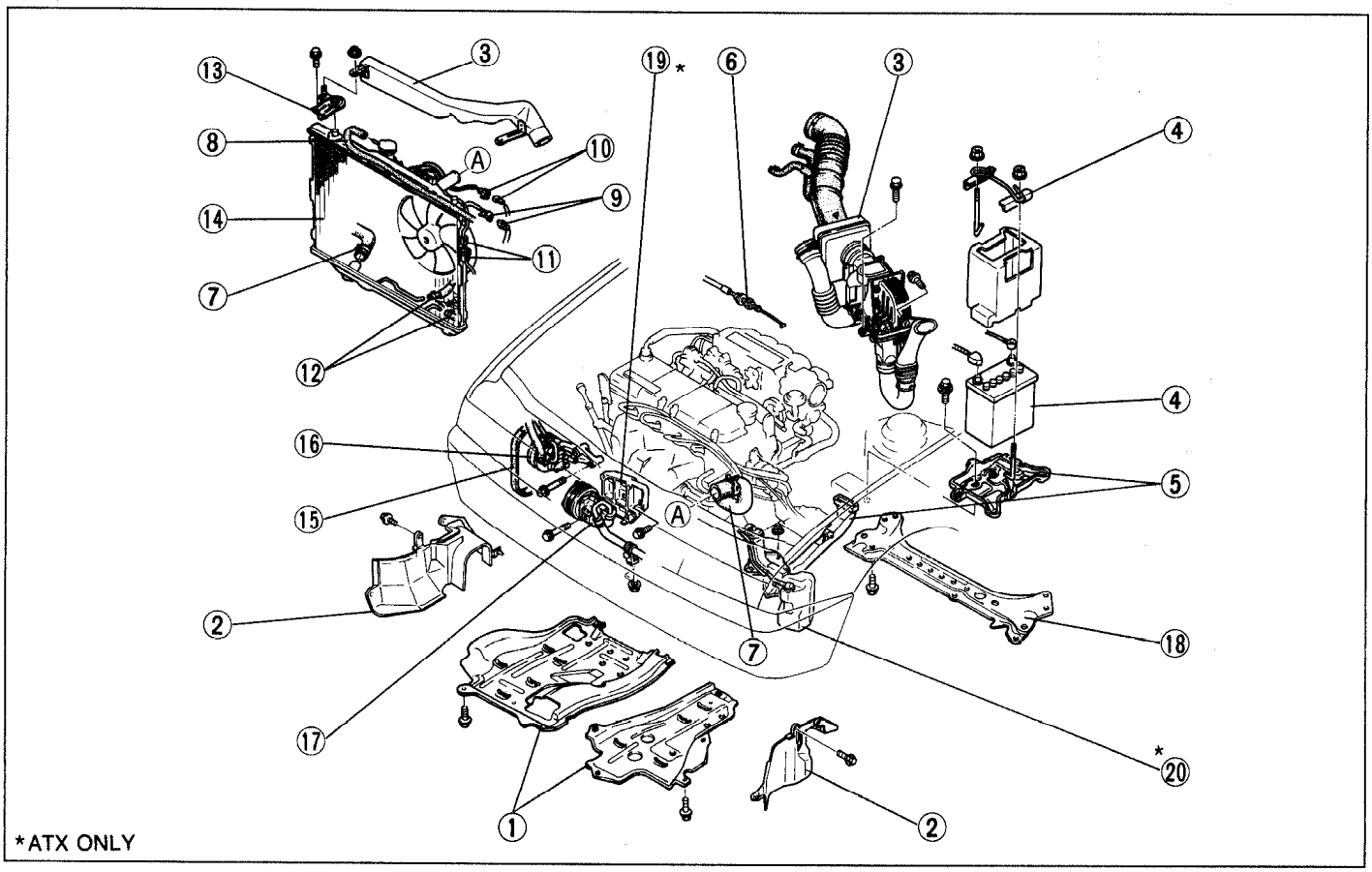

03U0BX-808

1. Undercover
2. Side cover
3. Resonance chamber and air cleaner assembly
4. Battery bracket and battery
5. Battery carrier and battery duct
6. Accelerator cable
7. Radiator hose
8. Coolant reservoir hose
9. Cooling fan connector
10. Radiator switch connector (ATX)
11. A/C cut switch connector (ATX)
12. Oil cooler hose (ATX)
13. Radiator bracket
14. Radiator and cooling fan assembly
15. P/S and/or A/C drive belt
16. P/S oil pump and bracket
    Removal Note..... page B–7
17. A/C compressor
    Removal Note..... page B–7
18. Crossmember
19. A/C compressor bracket
20. Coolant reservoir

Downloaded from www.Manualslib.com manuals search engine

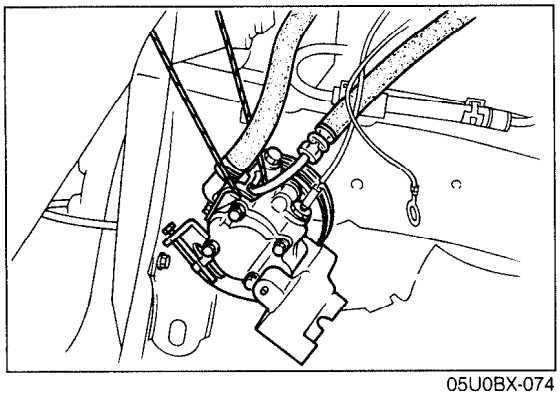

05U0BX-074

Removal note
P/S oil pump

Caution
- **Do not damage the hoses.**

1. Remove the P/S oil pump with the hoses still connected.
2. Position the pump away from the engine and affix it with wire.

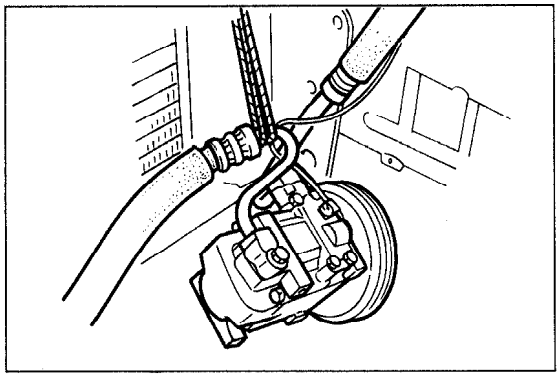

05U0BX-075

A/C compressor

Caution
- **Do not damage the hoses.**

1. Remove the A/C compressor with the hoses still connected.
2. Position the compressor away from the engine and affix it with wire.

Step 2
1. Disconnect the harness connectors shown in the figure.

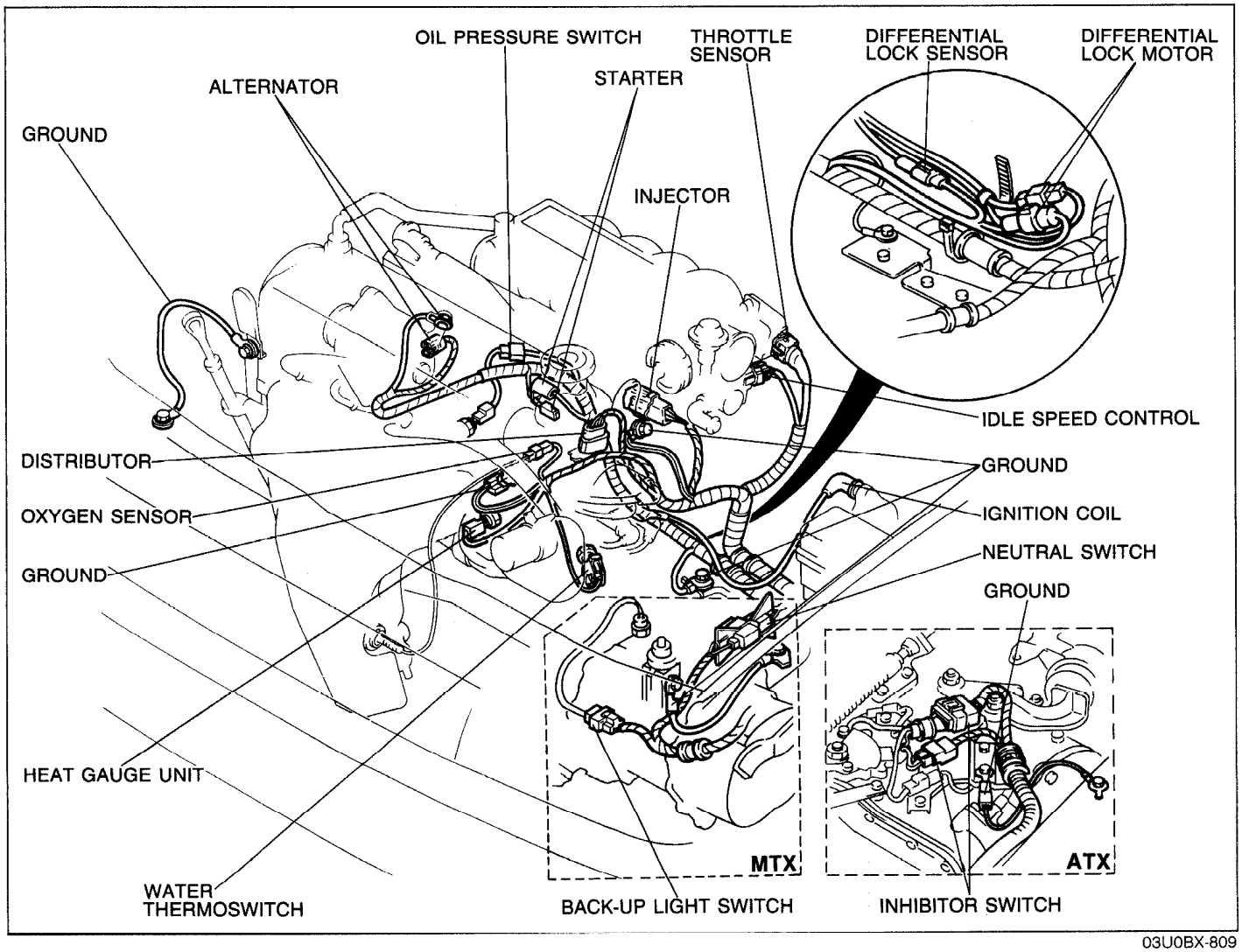

03U0BX-809

Downloaded from www.Manualslib.com manuals search engine

Step 3

1. Disconnect the hoses shown in the figure.

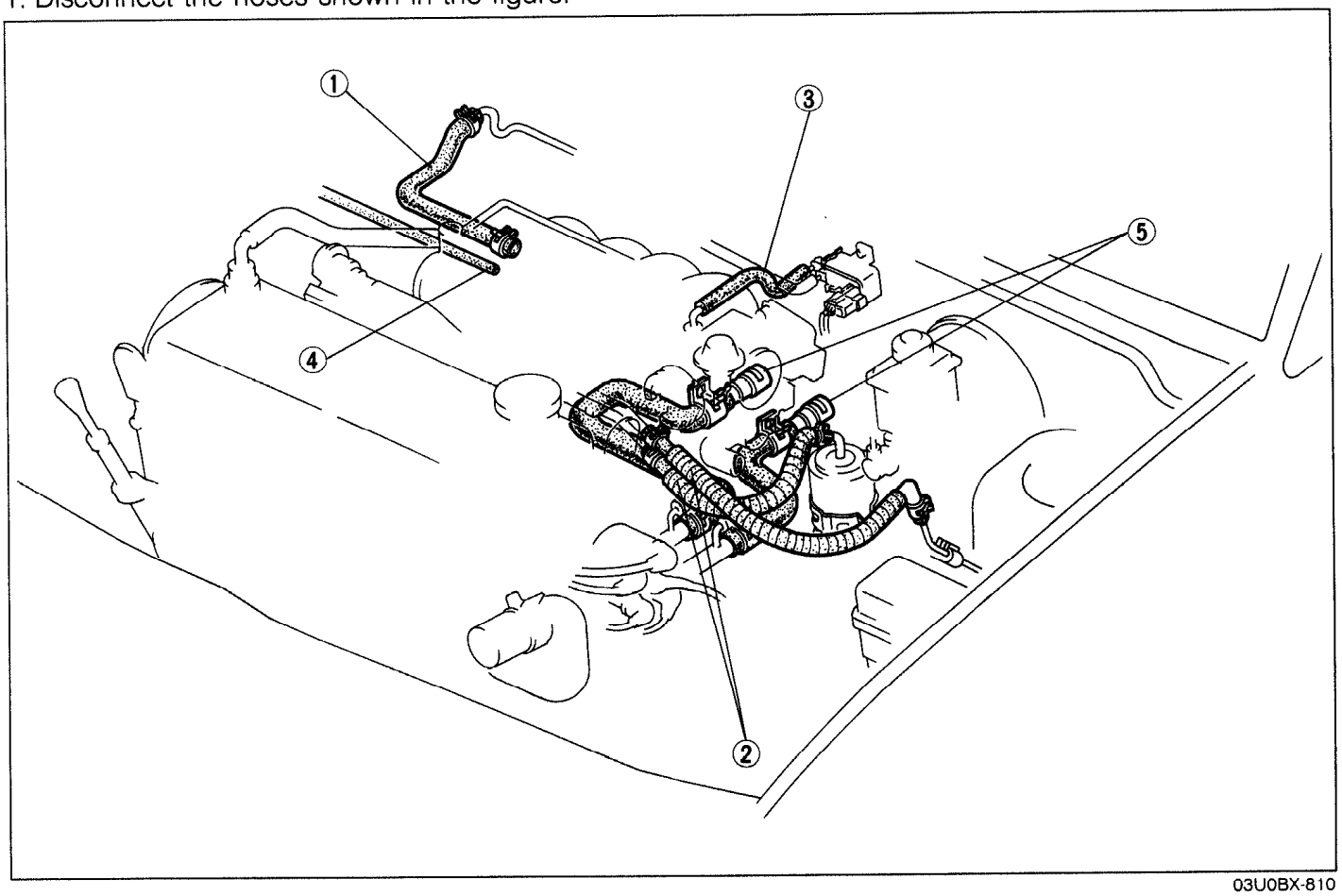

03U0BX-810

1. Brake vacuum hose
2. Fuel hose
   Removal Note..... page B–8
3. Vacuum hose (Purge control)
4. Vacuum hose (Cruise control)
5. Heater hose
   Removal Note..... page B–8

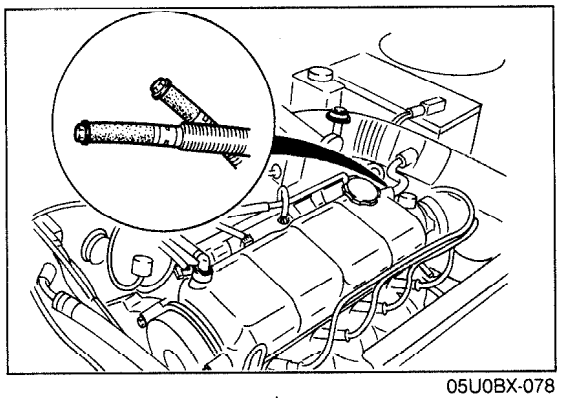

05U0BX-078

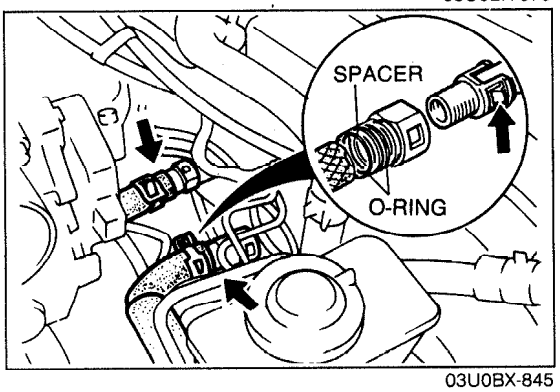

03U0BX-845

Removal note
Fuel hose

Warning
- **Keep sparks and open flame away from the fuel area.**

Caution
- **Cover the hose with a rag because fuel will spray out when disconnecting.**
- **Plug the disconnected hoses to avoid fuel leakage.**

1. Disconnect the fuel hoses.

Heater hose

Caution
- **Do not lose the heater hose joint O-rings and spacer when removed.**

1. Depress the heater hose retainer and remove the heater hose.

Downloaded from www.Manualslib.com manuals search engine

Step 4

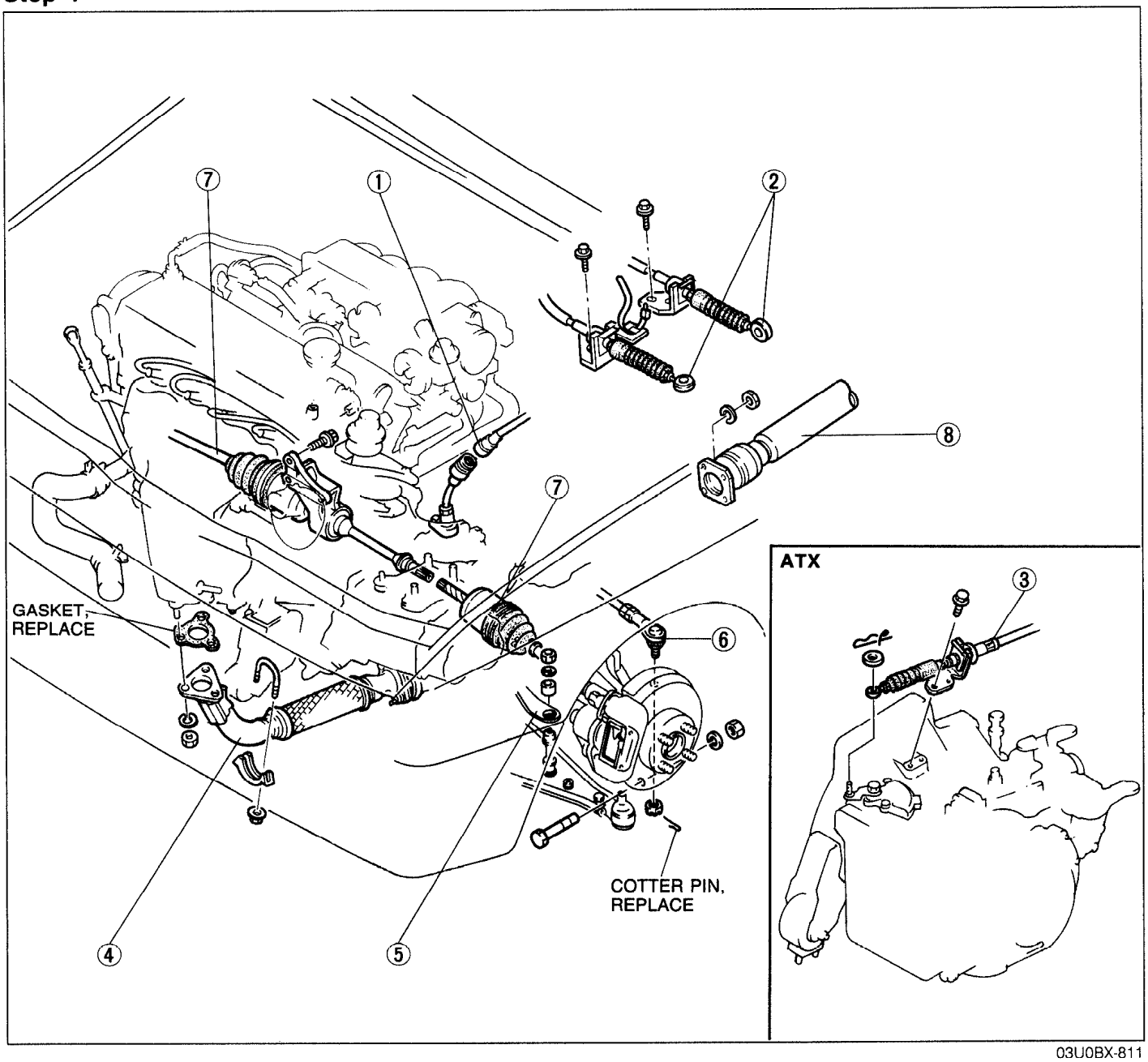

03U0BX-811

1. Speedometer cable
2. Select and shift cable (MTX)
3. Shift control cable (ATX)
4. Front exhaust pipe
5. Stabilizer
6. Tie-rod end
   Removal Note..... page B– 9
7. Driveshaft
   Removal Note..... page B–10
8. Propeller shaft
   Removal Note..... page L– 5

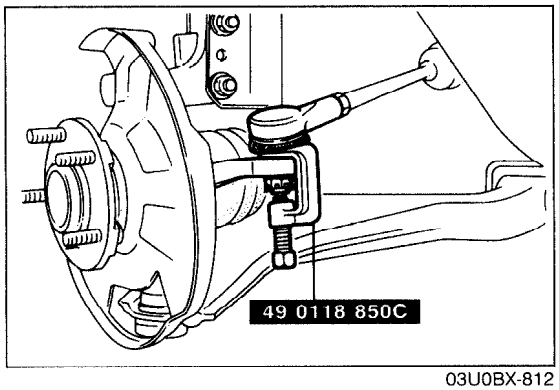

03U0BX-812

Removal note
Tie-rod end

1. Remove the cotter pin and loosen the nut until it is flush with the end of the ball joint stud.

   Caution
   - **Do not reuse the cotter pin.**

2. Separate the ball joint from the knuckle arm with the **SST**.

Downloaded from www.Manualslib.com manuals search engine

REMOVAL

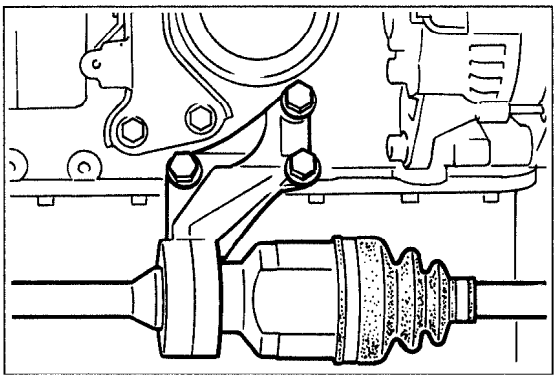

93E0B2-025

Driveshaft

1. Remove the joint shaft.

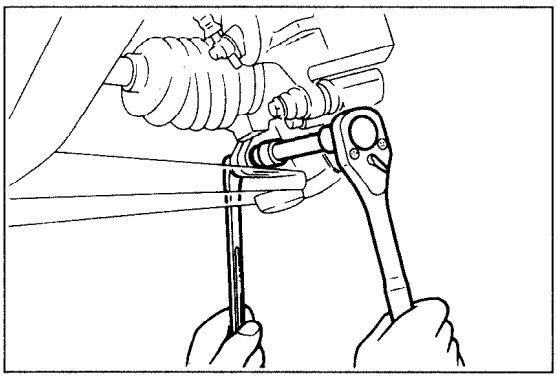

03U0BX-846

2. Remove the lower arm ball joint clinch bolt.

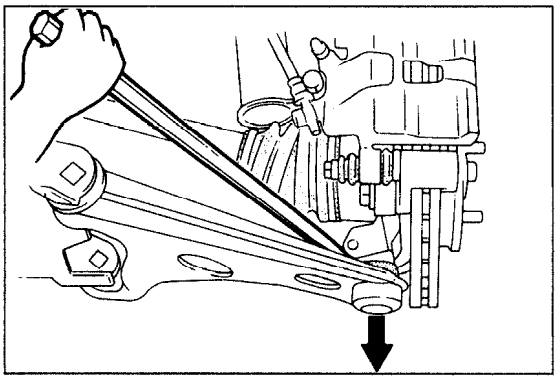

03U0BX-847

Caution
- **Do not damage the ball joint dust boots.**

3. Pry the lower arm downward to separate it from the knuckle.

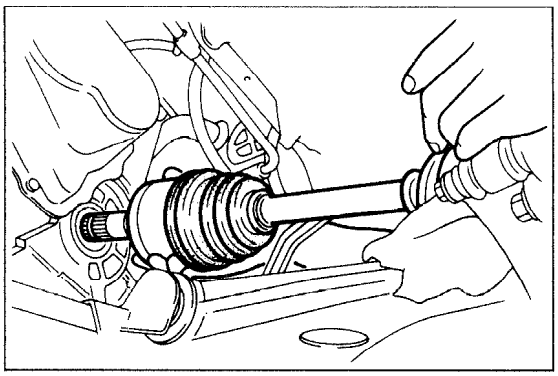

03U0BX-813

Caution
- **Do not damage the oil seal.**

4. Separate the driveshaft from the transaxle.

Downloaded from www.Manualslib.com manuals search engine

Step 5

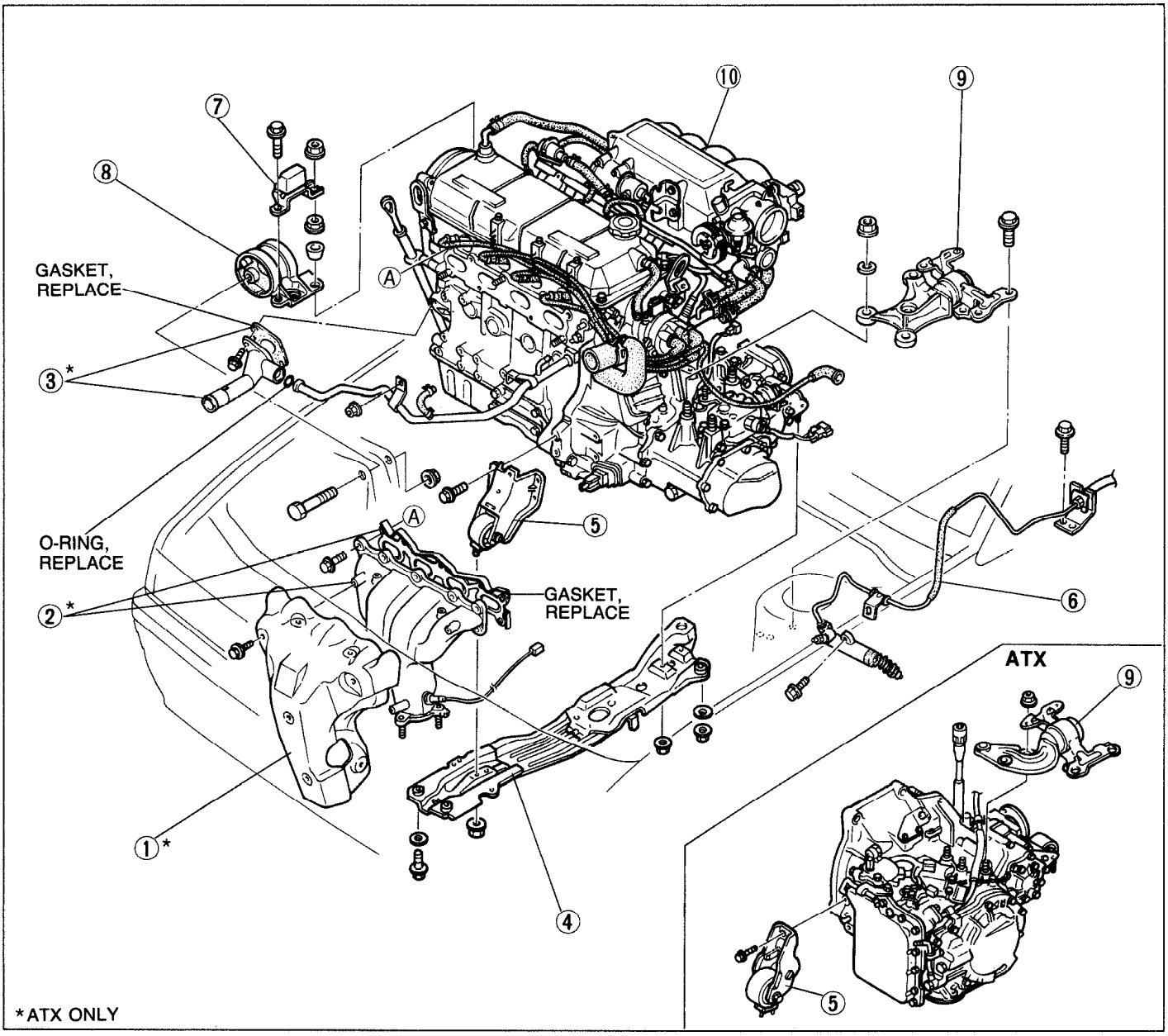

03U0BX-814

1. Exhaust manifold insulator
2. Exhaust manifold and gasket
3. Water inlet pipe and gasket
4. Engine mount member
   Removal Note..... page B–11
5. No.2 engine mount rubber and bracket
6. Clutch release cylinder (MTX)
   Removal Note..... page B–12
7. Dynamic damper
8. No.3 engine mount rubber
9. No.4 engine mount rubber and bracket
10. Engine and transaxle assembly
    Removal Note..... page B–12

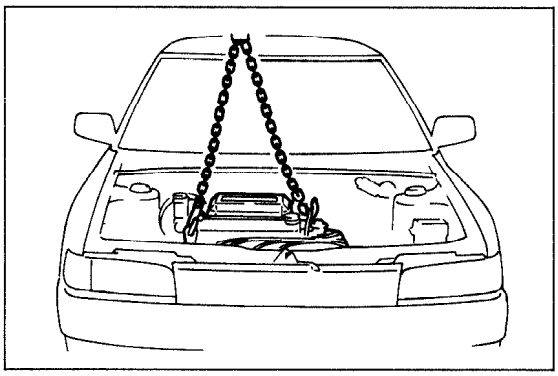

03U0BX-815

Removal note
Engine mount member
1. Suspend the engine with a chain hoist.

Downloaded from www.Manualslib.com manuals search engine

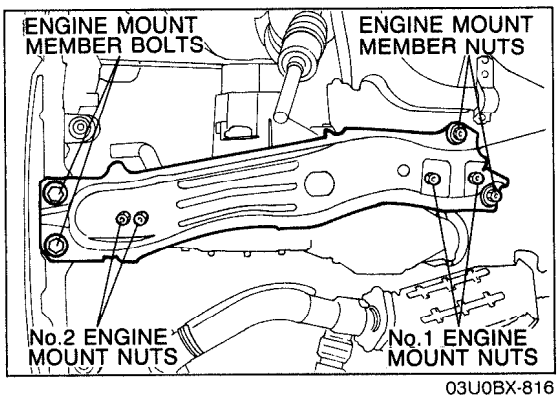

03U0BX-816

2. Remove the No.1 and No.2 engine mount nuts.
3. Remove the engine mount member bolts and nuts and the engine mount member.

Caution
- **Be careful that the engine does not fall when removing the member.**

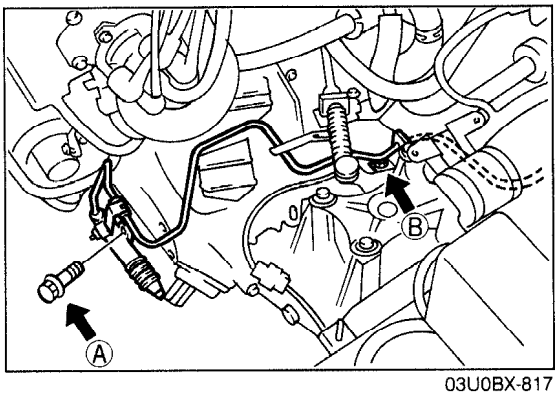

03U0BX-817

Clutch release cylinder (MTX)
1. Remove the release cylinder pipe bracket from the transaxle.
2. Position the release cylinder with the hose connected away from the transaxle for easier removal.

Caution
- **Do not damage the pipe and hose.**

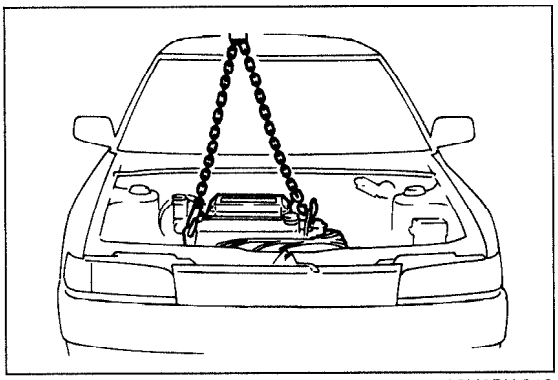
03U0BX-818

Engine and transaxle assembly

Caution
- **Do not damage any components in the engine compartment.**

1. Lift the engine and transaxle assembly out as a unit.

Downloaded from www.Manualslib.com manuals search engine

Step 6
Separate the engine and transaxle in the order shown in the figure.

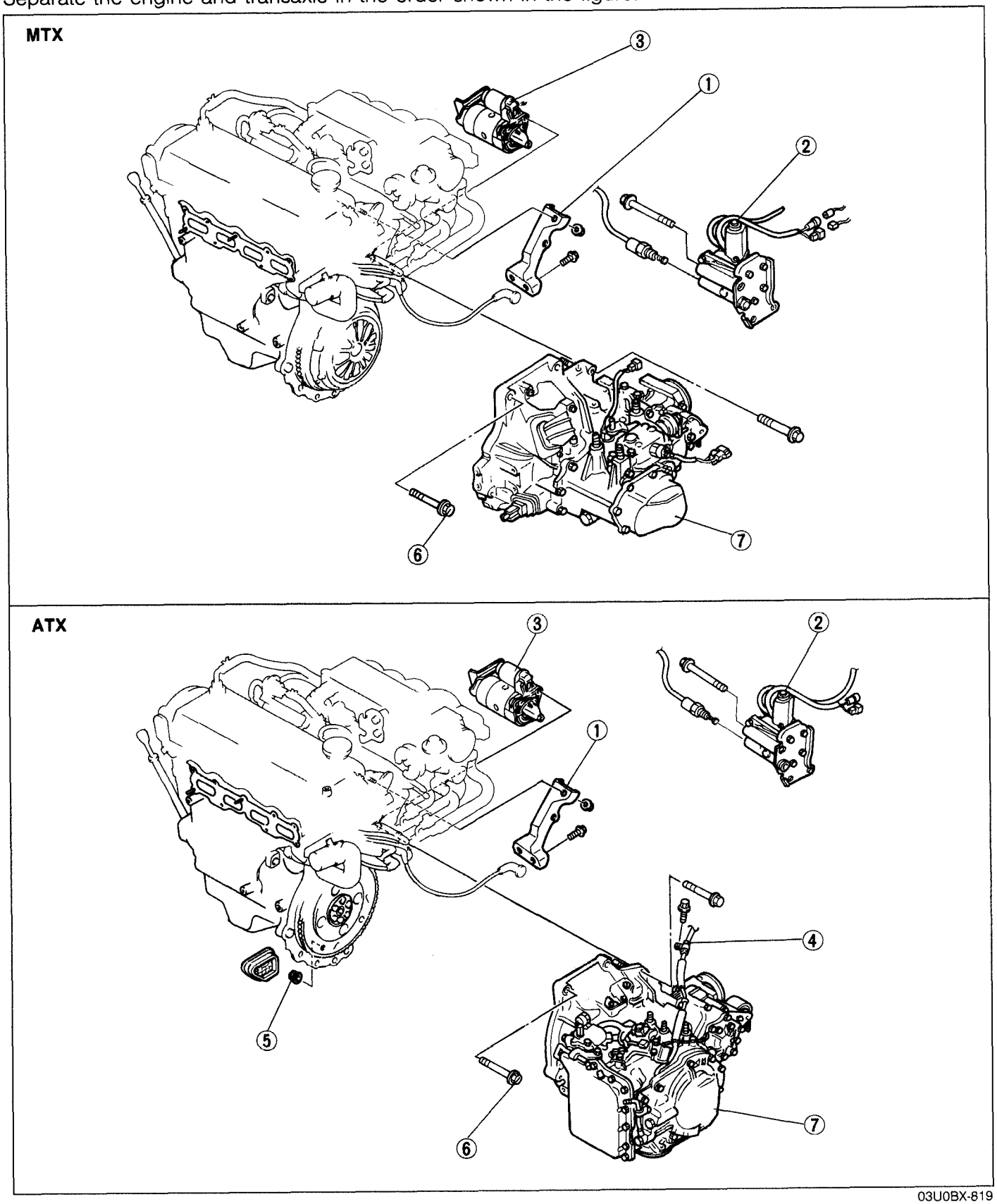

1. Intake manifold bracket
2. Center differential lock motor
   Removal Note ..... page J3–99
3. Starter and bracket
4. Throttle cable (ATX)
5. Torque converter nuts (ATX)
6. Transaxle mounting bolts
7. Transaxle

Downloaded from www.Manualslib.com manuals search engine

INSTALLATION

PROCEDURE

Tighten all bolts and nuts to the specified torques.

Step 1

1. Join the engine and transaxle.

Torque Specifications

MTX

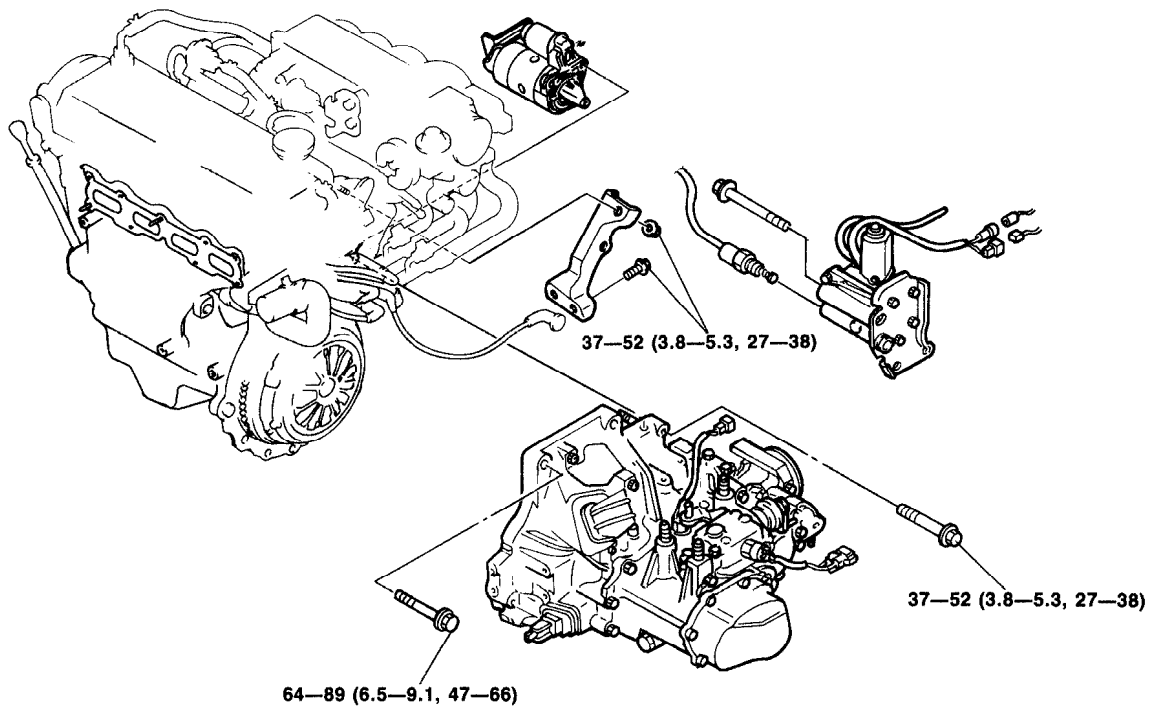

N·m (m-kg, ft-lb)

ATX

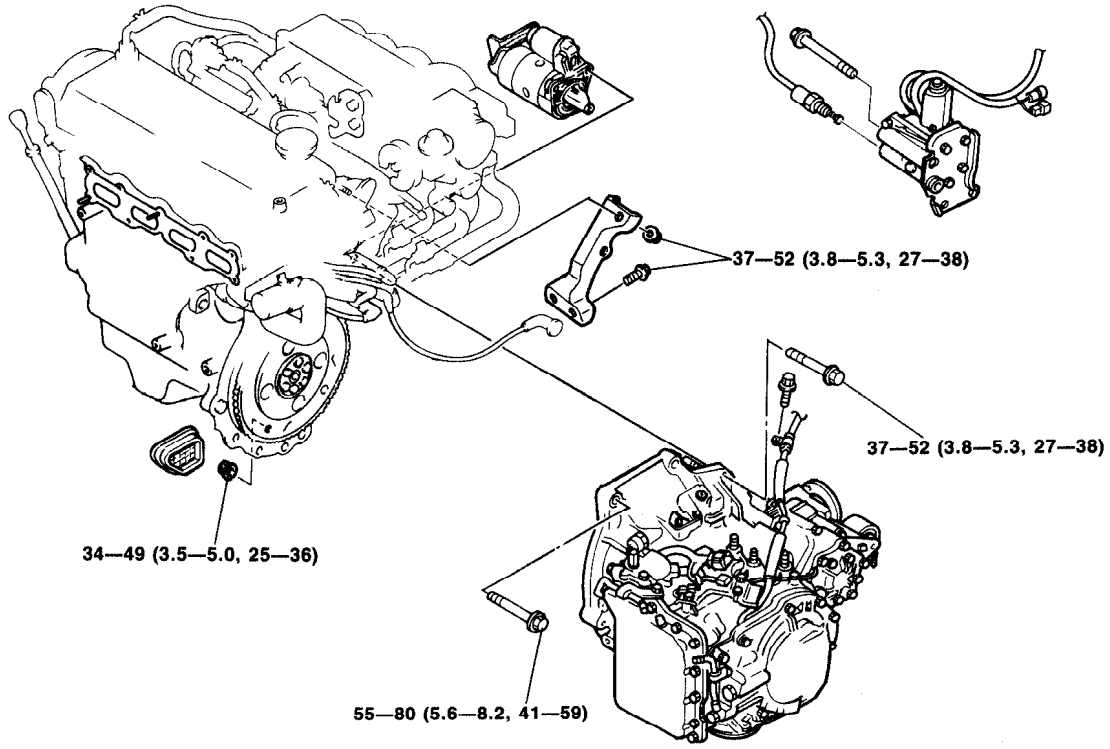

N·m (m-kg, ft-lb)

03U0BX-820

Downloaded from www.Manualslib.com manuals search engine

Step 2

Warning
- **Be sure the vehicle is securely supported on safety stands.**

Torque Specifications

55—80 (5.6—8.2, 41—59)
43—61 (4.4—6.2, 32—45)
67—93 (6.8—9.5, 49—69)
74—103 (7.5—10.5, 54—76)
GASKET, REPLACE
6.9—9.8 N·m (70—100 cm-kg, 61—87 in-lb)
19—25 (1.9—2.6, 14—19)
67—93 (6.8—9.5, 49—69)
O-RING, REPLACE
37—52 (3.8—5.3, 27—38)
16—23 (1.6—2.3, 12—17)
GASKET, REPLACE
67—93 (6.8—9.5, 49—69)
ATX
16—23 (1.6—2.3, 12—17)
64—89 (6.5—9.1, 47—66)
37—52 (3.8—5.3, 27—38)
7.8—11 N·m (80—110 cm-kg, 69—95 in-lb)
37—52 (3.8—5.3, 27—38)
64—89 (6.5—9.1, 47—66)
N·m (m-kg, ft-lb)

03U0BX-821

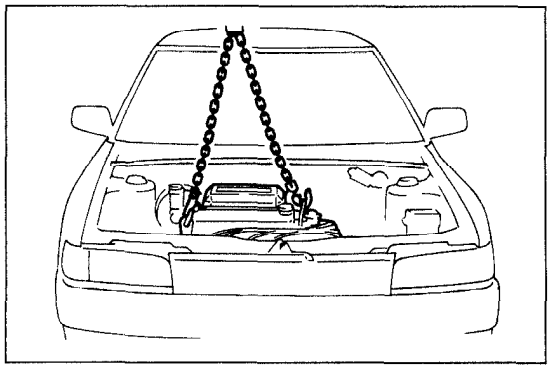

03U0BX-822

Engine and transaxle assembly
1. Suspend the engine and transaxle assembly.

Caution
- **Do not damage any components in the engine compartment.**

Downloaded from www.Manualslib.com manuals search engine

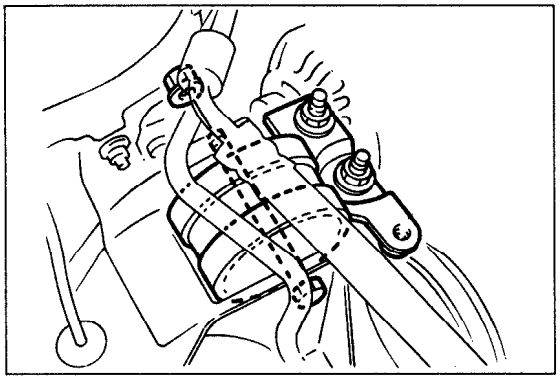

03U0BX-823

Engine mount, clutch release cyliner (MTX) and engine mount member

1. Install the No.3 engine mount rubber; then loosely tighten the bolt and nuts.

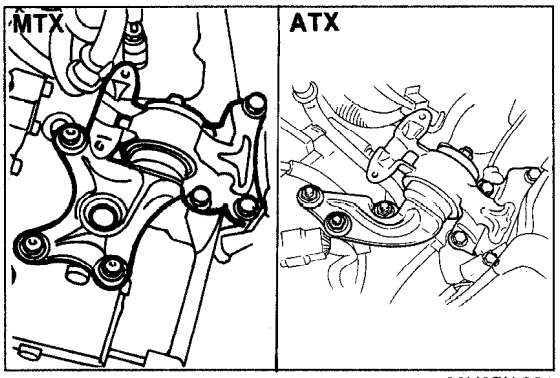

03U0BX-824

2. Install the No.4 engine mount rubber and bracket assembly; then loosely tighten the bolts and nuts.

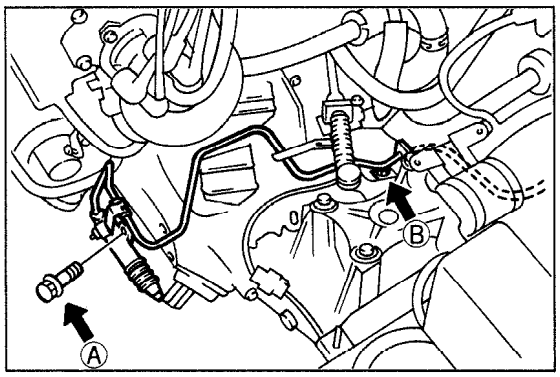

03U0BX-825

3. Install the clutch release cylinder and pipe bracket assembly. (MTX)

Tightening torque:
Ⓐ 16—23 N·m (1.6—2.3 m-kg, 12—17 ft-lb)
Ⓑ 6.9—9.8 N·m (70—100 cm-kg, 61—87 in-lb)

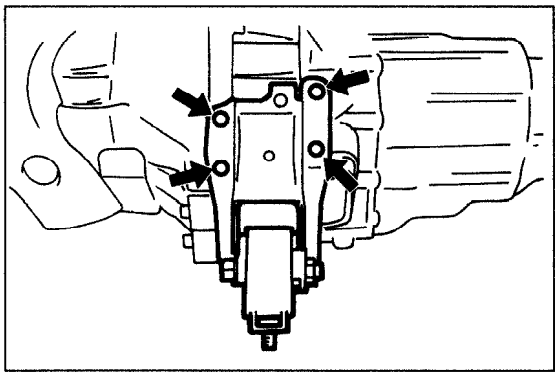

03U0BX-826

4. No.2 engine mount rubber and bracket assembly.

Tightening torque:
37—52 N·m (3.8—5.3 m-kg, 27—38 ft-lb)

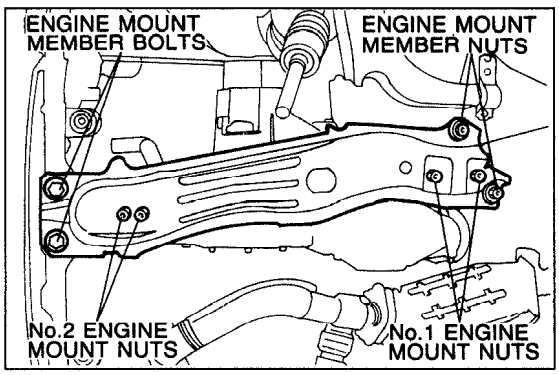

03U0BX-827

5. Align the engine mount member to the No.1 and No.2 engine mount bolts; then loosely tighten the nuts.
6. Install the engine mount member bolt and nuts; then tighten them.

Tightening torque:
64—89 N·m (6.5—9.1 m-kg, 47—66 ft-lb)

7. Tighten the No.1 and No.2 engine mount nuts.

Tightening torque:
37—52 N·m (3.8—5.3 m-kg, 27—38 ft-lb)

Downloaded from www.Manualslib.com manuals search engine

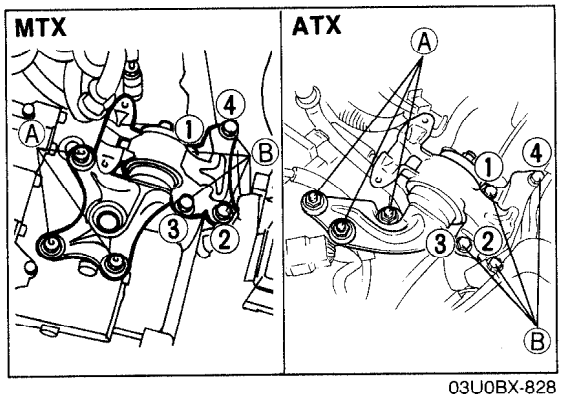

03U0BX-828

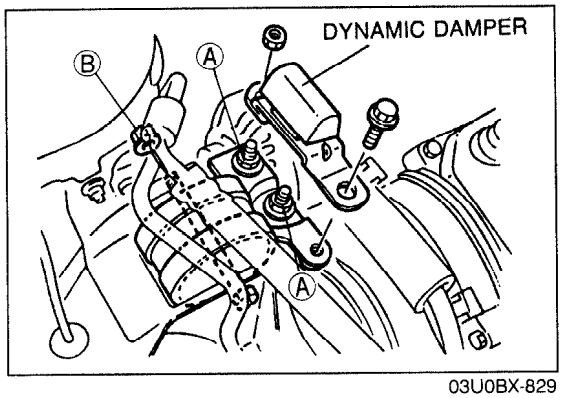

03U0BX-829

8. Tighten bolts Ⓑ in two or three steps in the order shown.

Tightening torque:
43—61 N·m (4.4—6.2 m-kg, 32—43 ft-lb)

9. Tighten nuts Ⓐ.

Tightening torque:
67—93 N·m (6.8—9.5 m-kg, 49—69 ft-lb)

10. Tighten the No.3 engine mount nuts Ⓐ.

Tightening torque:
74—103 N·m (7.5—10.5 m-kg, 54—76 ft-lb)

11. Tighten nut Ⓑ.

Tightening torque:
67—93 N·m (6.8—9.5 m-kg, 49—69 ft-lb)

12. Install the dynamic damper.

Tightening torque:
55—80 N·m (5.6—8.2 m-kg, 41—59 ft-lb)

13. Remove a chain hoist.

Step 3
Torque Specifications

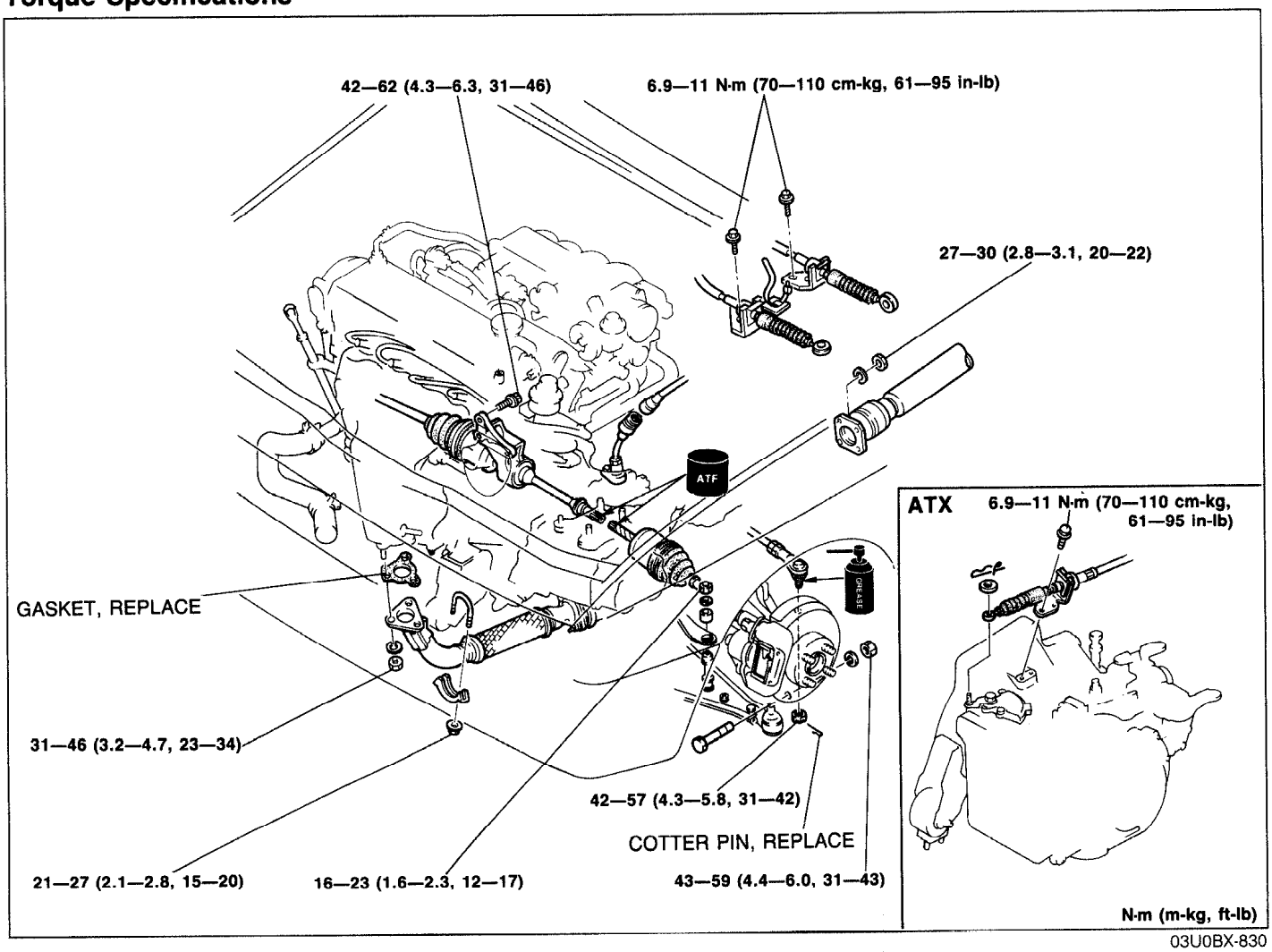

03U0BX-830

Downloaded from www.Manualslib.com manuals search engine

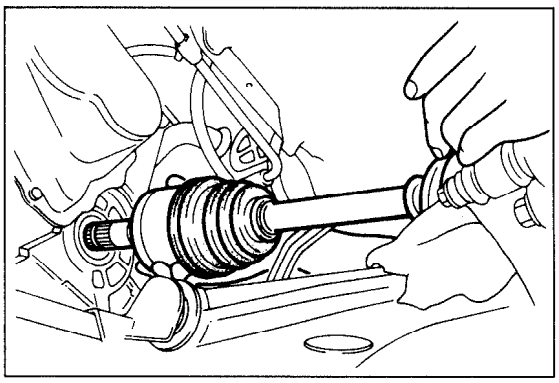

03U0BX-831

Propeller shaft

1. Install the propeller shaft. (Refer to page L–5.)

Driveshaft

1. Apply grease to the end of the driveshaft.

Caution

- **When installing the driveshaft, be careful not to damage the oil seal.**
- **After installation, pull the front hub outward to confirm that the driveshaft is securely held by the clip.**

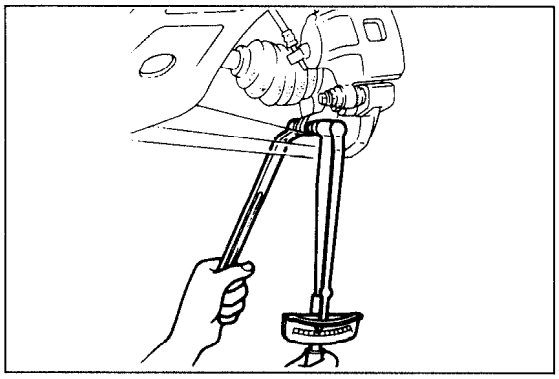

03U0B2-832

2. Install the driveshaft and a new clip.
3. Install the lower arm ball joint to the knuckle and tighten the clinch bolt.

Tightening torque:
43—59 N·m (4.4—6.0 m-kg, 31—43 ft-lb)

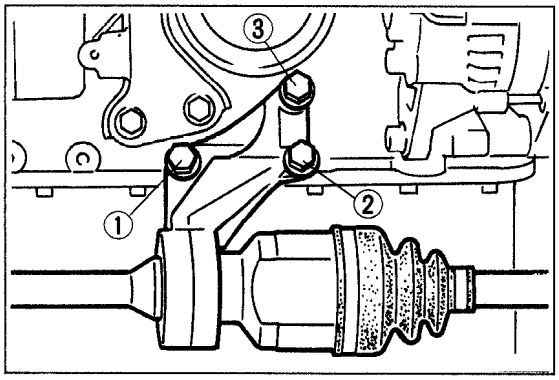

93E0B2-061

4. Install the joint shaft.
5. Tighten the bolts in the order shown.

Tightening torque:
42—62 N·m (4.3—6.3 m-kg, 31—46 ft-lb)

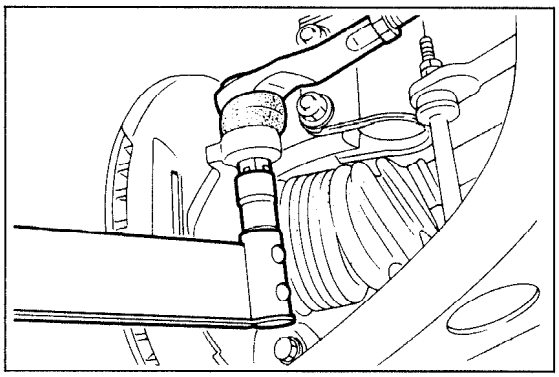

03U0BX-848

Tie-rod end

1. Install the tie-rod end to the knuckle.

Tightening torque:
42—57 N·m (4.3—5.8 m-kg, 31—42 ft-lb)

2. Install a new cotter pin.

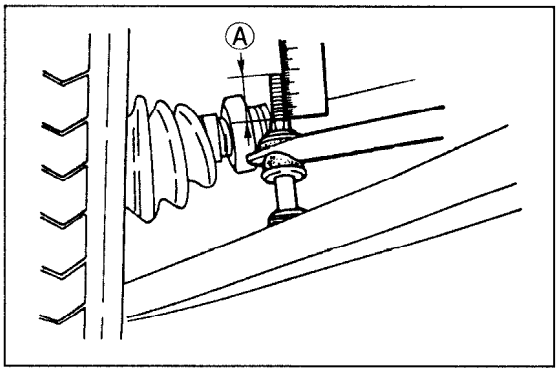

93E0B2-078

Stabilizer

1. Install and adjust the stabilizer.

Dimension A: 17—19mm (0.67—0.75 in)

Tightening torque:
16—23 N·m (1.6—2.3 m-kg, 12—17 ft-lb)

Downloaded from www.Manualslib.com manuals search engine

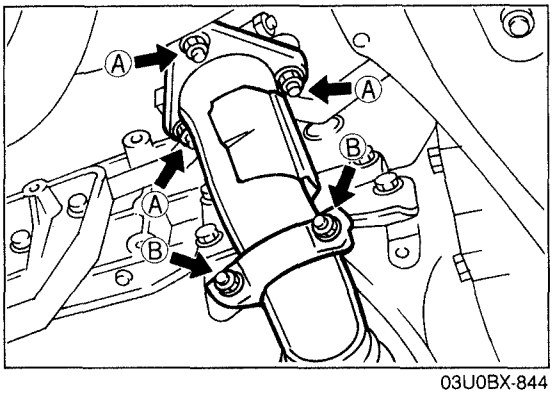

03U0BX-844

Exhaust pipe

1. Install the exhaust pipe and a new gasket; then loosely tighten the locknuts Ⓐ.
2. Loosely tighten the bracket nuts Ⓑ.
3. Tighten the locknuts Ⓐ.

Tightening torque:
31—46 N·m (3.2—4.7 m-kg, 23—34 ft-lb)

4. Tighten the bracket nuts Ⓑ.

Tightening torque:
21—27 N·m (2.1—2.8 m-kg, 15—20 ft-lb)

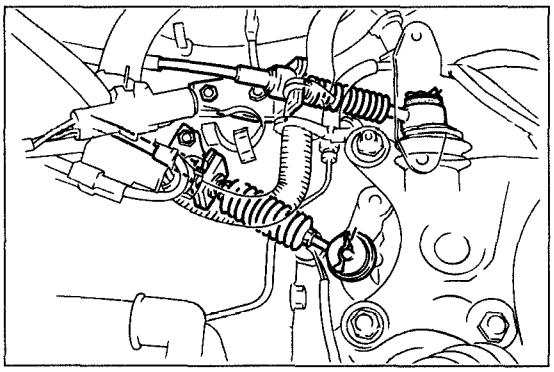
03U0BX-833

Select and shift cable (MTX)

1. Install the select cable and the spring pin.
2. Install the shift cable and the spring pin.

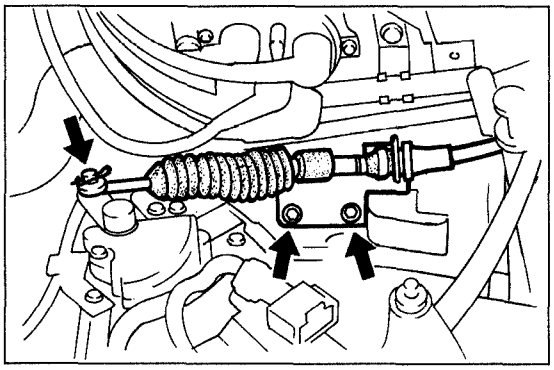
03U0BX-834

Shift control cable (ATX)

1. Install the shift control cable and the spring pin.

Tightening torque:
6.9—11 N·m (70—110 cm-kg, 61—95 in-lb)

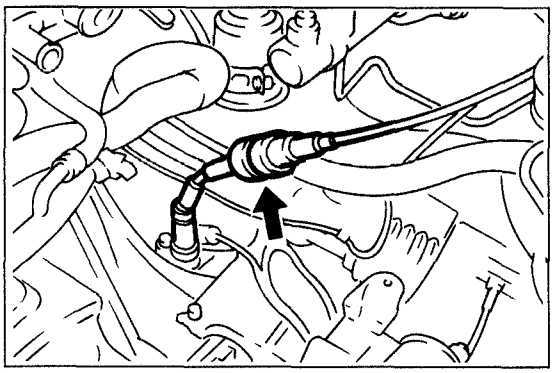
03U0BX-835

Speedometer cable

1. Connect the speedometer cable.

Downloaded from www.Manualslib.com manuals search engine

Step 4

1. Connect the hoses shown in the figure.

Caution

- **Position the hose clamp in the original location on the hose, and squeeze the clamp lightly with large pliers to ensure a good fit.**

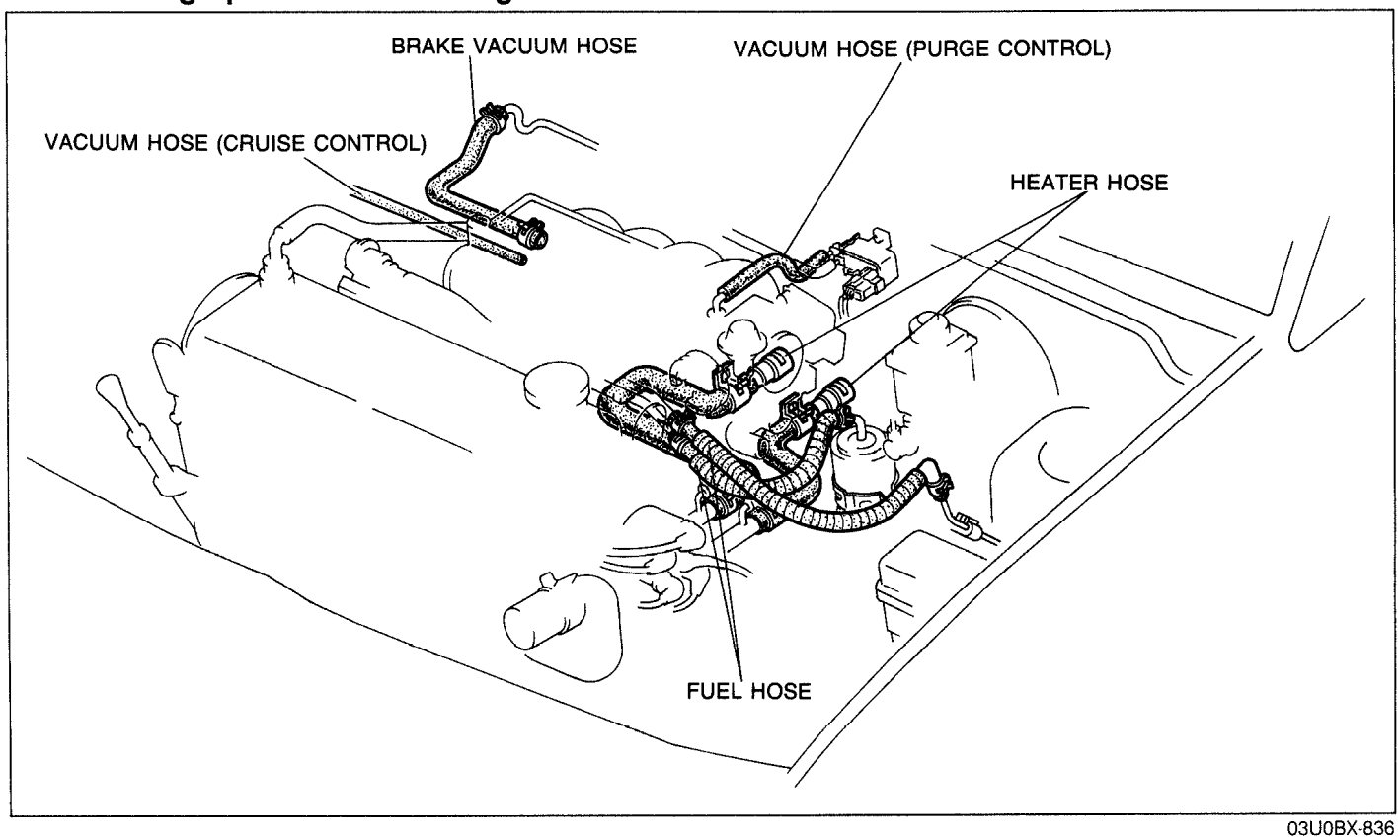

03U0BX-836

Step 5

1. Connect the harness connectors shown in the figure.

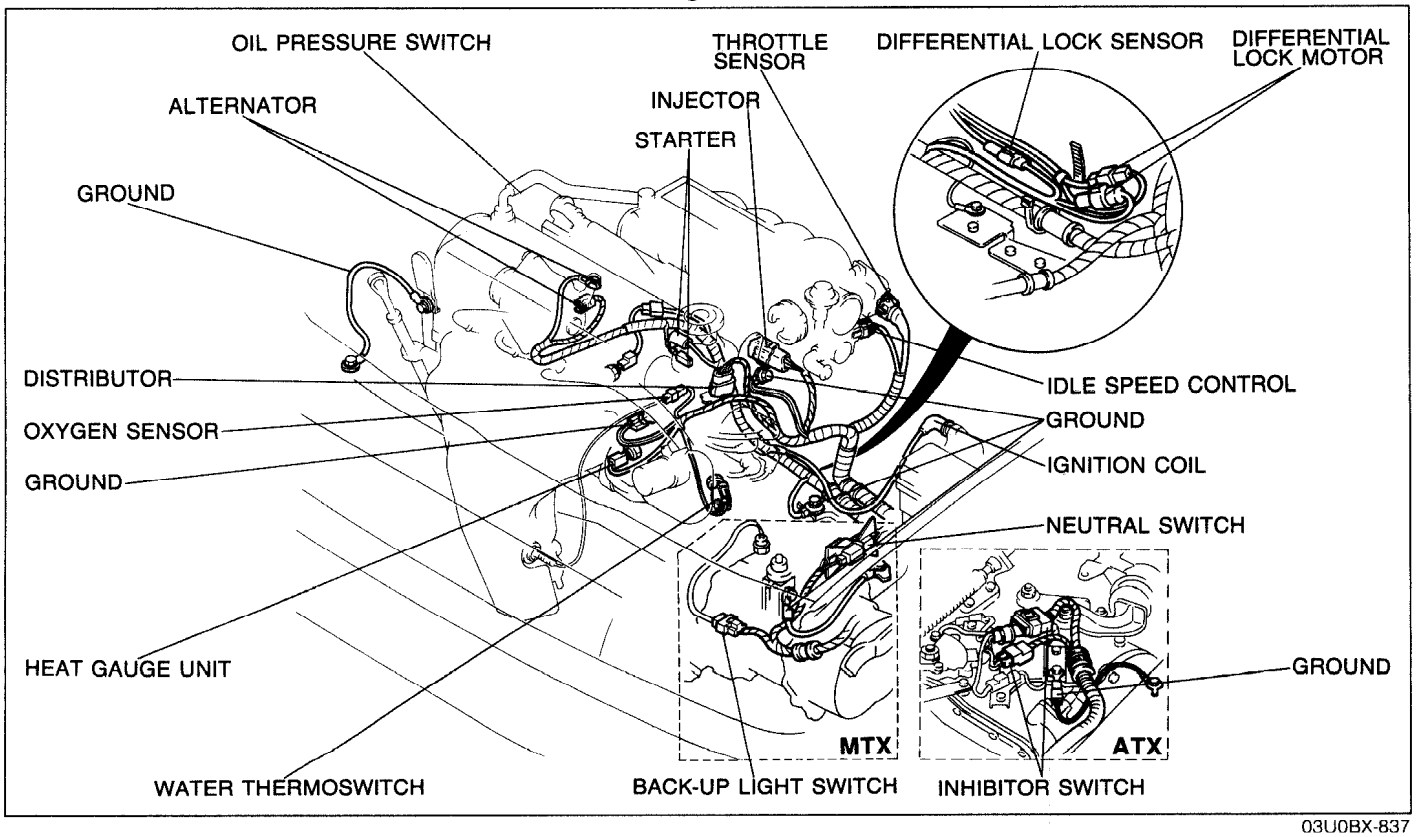

03U0BX-837

Downloaded from www.Manualslib.com manuals search engine

Step 6
Torque Specifications

7.8—11 N·m (80—110 cm-kg, 69—95 in-lb)
19—25 (1.9—2.6, 14—19)
7.8—11 N·m (80—110 cm-kg, 69—95 in-lb)
37—52 (3.8—5.3, 27—38)
37—52 (3.8—5.3, 27—38)
7.8—11 N·m (80—110 cm-kg, 69—95 in-lb)
19—25 (1.9—2.6, 14—19)
24—35 (2.4—3.6, 17—26)
93—107 (9.5—11.9, 69—79)
6.4—9.3 N·m (65—95 cm-kg, 56—82 in-lb)
7.8—11 N·m (80—110 cm-kg, 69—95 in-lb)
7.8—11 N·m (80—110 cm-kg, 69—95 in-lb)
N·m (m-kg, ft-lb)

03U0BX-838

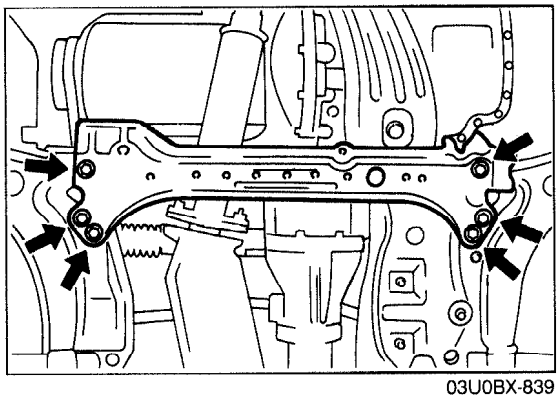

03U0BX-839

Crossmember
1. Install the crossmember.

Tightening torque:
93—107 N·m (9.5—11.9 m-kg, 69—79 ft-lb)

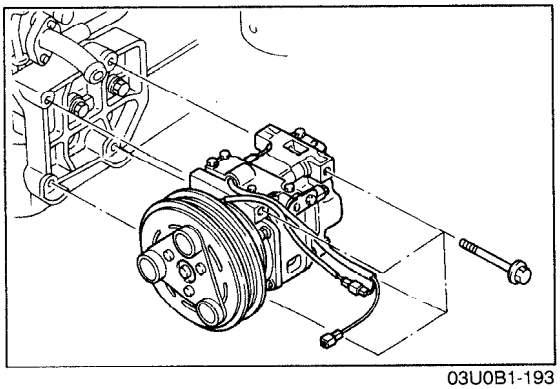

03U0B1-193

A/C compressor
1. Install the A/C compressor.

Tightening torque:
24—35 N·m (2.4—3.6 m-kg, 17—26 ft-lb)

Downloaded from www.Manualslib.com manuals search engine

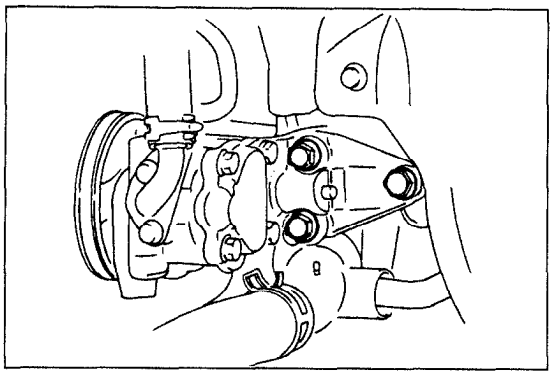

03U0BX-840

P/S oil pump and bracket

1. Install the P/S oil pump and bracket.

Tightening torque:
37—52 N·m (3.8—5.3 m-kg, 27—38 ft-lb)

Drive belt

1. Install the P/S and/or A/C drive belt.
2. Adjust the drive belt deflections.

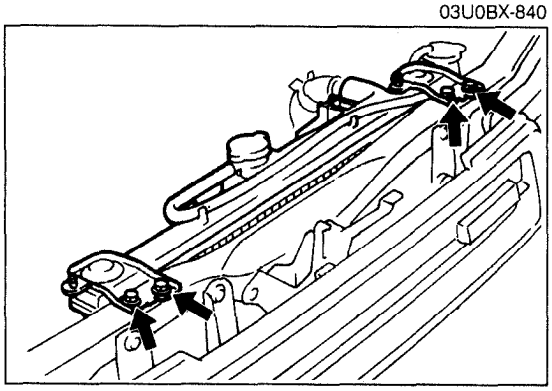

03U0BX-841

Radiator and cooling fan assembly

1. Install the radiator and cooling fan assembly.

Tightening torque:
7.8—11 N·m (80—110 cm-kg, 69—95 in-lb)

2. Connect the cooling fan connector.
3. Connect the radiator switch connector. (ATX)
4. Connect the A/C cut switch connector. (ATX)
5. Connect the oil cooler hose. (ATX)
6. Connect the coolant reservoir hose.
7. Connect the upper and lower radiator hoses.

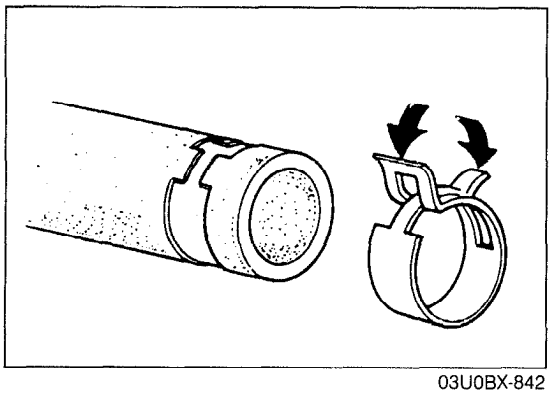

03U0BX-842

Caution

- **Position the hose clamp in the original location on the hose, and squeeze the clamp lightly with large pliers to ensure a good fit.**

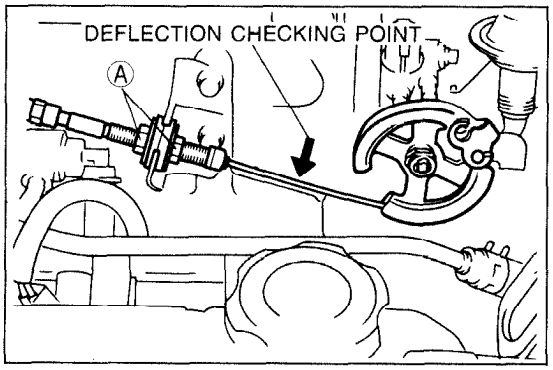

03U0BX-849

Accelerator cable

1. Install the accelerator cable.
2. Adjust the cable deflection by turning nuts A.

Deflection: 1—3mm (0.04—0.12 in)

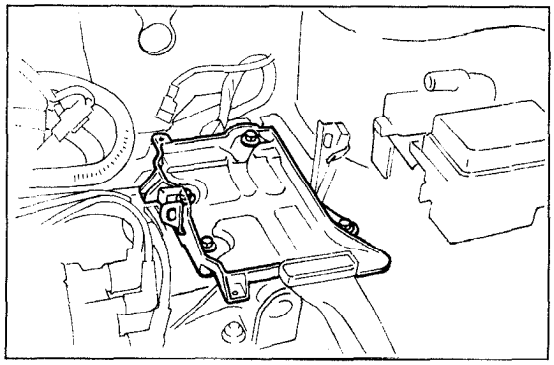

03U0B1-198

Battery duct, battery carrier, and battery

1. Install the battery duct.
2. Install the battery carrier.

Tightening torque:
19—25 N·m (1.9—2.6 m-kg, 14—19 ft-lb)

3. Install the battery and the battery bracket.

Tightening torque:
2.9—5.9 N·m (30—60 cm-kg, 26—52 in-lb)

Downloaded from www.Manualslib.com manuals search engine

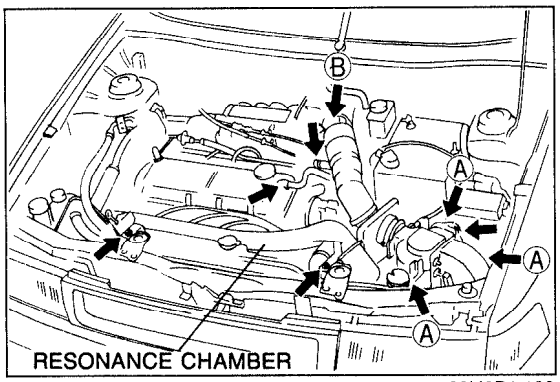

03U0B1-199

Air cleaner assembly
1. Install the air cleaner assembly.

Tightening torque:
Ⓐ 19—25 N·m (1.9—2.6 m-kg, 14—19 ft-lb)
Ⓑ 7.8—11 N·m (80—110 cm-kg, 69—95 in-lb)

2. Connect the airflow sensor connector.

Resonance chamber
1. Install the resonance chamber.

Tightening torque:
7.8—11 N·m (80—110 cm-kg, 69—95 in-lb)

Undercover and side cover
1. Install the undercover and side cover.

Steps after installation
1. If the engine oil was drained, fill with the specified amount and type of engine oil.
2. Fill the radiator with the specified amount and type of engine coolant.
3. Fill the transaxle with the specified amount and type of transaxle oil. (Refer to pages J3–12, K2–134.)
4. Connect the negative battery cable.
5. Start the engine and check the following:
   (1) Engine oil, transaxle oil, and engine coolant leakage.
   (2) Ignition timing, idle speed.
   (3) Operation of emission control system.
6. Perform a road test.
7. Recheck the engine oil and engine coolant levels.

03U0BX-843

Downloaded from www.Manualslib.com manuals search engine

Downloaded from www.Manualslib.com manuals search engine

COOLING SYSTEM

OUTLINE ..... **E– 2**
OUTLINE OF CONSTRUCTION ..... **E– 2**
SPECIFICATIONS ..... **E– 2**
RADIATOR AND COOLING FAN ..... **E– 3**

03U0EX-801

Downloaded from www.Manualslib.com manuals search engine

OUTLINE

OUTLINE OF CONSTRUCTION

The cooling system in the 4WD model 323 is basically the same as in the 2WD model 323.
The radiator and cooling fan specifications are different, however.

03U0EX-802

SPECIFICATIONS

Item \ Engine				BP SOHC	
				MTX	ATX
Cooling system				Water-cooled, forced circulation	
Coolant capacity			liters (US qt, Imp qt)	5.0 (5.3, 4.4)	6.0 (6.3, 5.3)
Water pump	Type			Centrifugal	
	Water seal			Unified mechanical seal	
Thermostat	Type			Wax, two-stage	
	Opening temperature		°C (°F)	Main: 86.5—89.5 (188—193) Sub : 83.5—86.5 (182—188)	
	Full-open temperature		°C (°F)	100 (212)	
	Full-open lift		mm (in)	Main: 8.0 (0.31) min. Sub : 1.5 (0.05) min.	
Radiator	Type			Corrugated fin	
	Cap valve-opening pressure		kPa (kg/cm^2, psi)	74—103 (0.75—1.05, 11—15)	
Cooling fan	Type			Electric	
	Blade	Outer diameter	mm (in)	320 (12.6)	340 (13.4)
		Number		4	5
	Motor	Current	A	6.6 ± 1	Hi : 13.3 + 10% max. Low: 8.8 + 10% max.

03U0EX-803

Downloaded from www.Manualslib.com manuals search engine

RADIATOR AND COOLING FAN

The radiator and cooling fan specifications are revised.

Specifications

		4WD model		2WD model	
		MTX	ATX	MTX	ATX
Radiator					
Core size mm (in)	Width	648 (25.51)	647 (25.47)	←	←
	Height	400 (15.75)	390 (15.35)	←	←
	Depth	16 (0.63)	25 (0.98)	16 (0.63)	25 (0.98)
Fin pitch mm (in)		1.25 (0.049)	1.3 (0.051)	←	←
Heat dissipation capacity kcal/h		38,500	43,800	38,800	43,800
Transaxle oil cooler	Type	—	Double tube	—	Laminated
	Heat dissipation capacity kcal/h	—	1,650	—	1,700
Cooling fan					
Number of blades		4	5	4	←
Outer diameter mm (in)		320 (12.6)	340 (13.4)	320 (12.6)	←
Capacity W-V		80-12	160-12	80-12	160-12
Current A		6.6 ± 1	Hi : 13.3+10% max. Low: 8.8+10% max.	6.6 ± 1	Hi : 13.3+10% max. Low: 8.8+10% max.

03U0EX-804

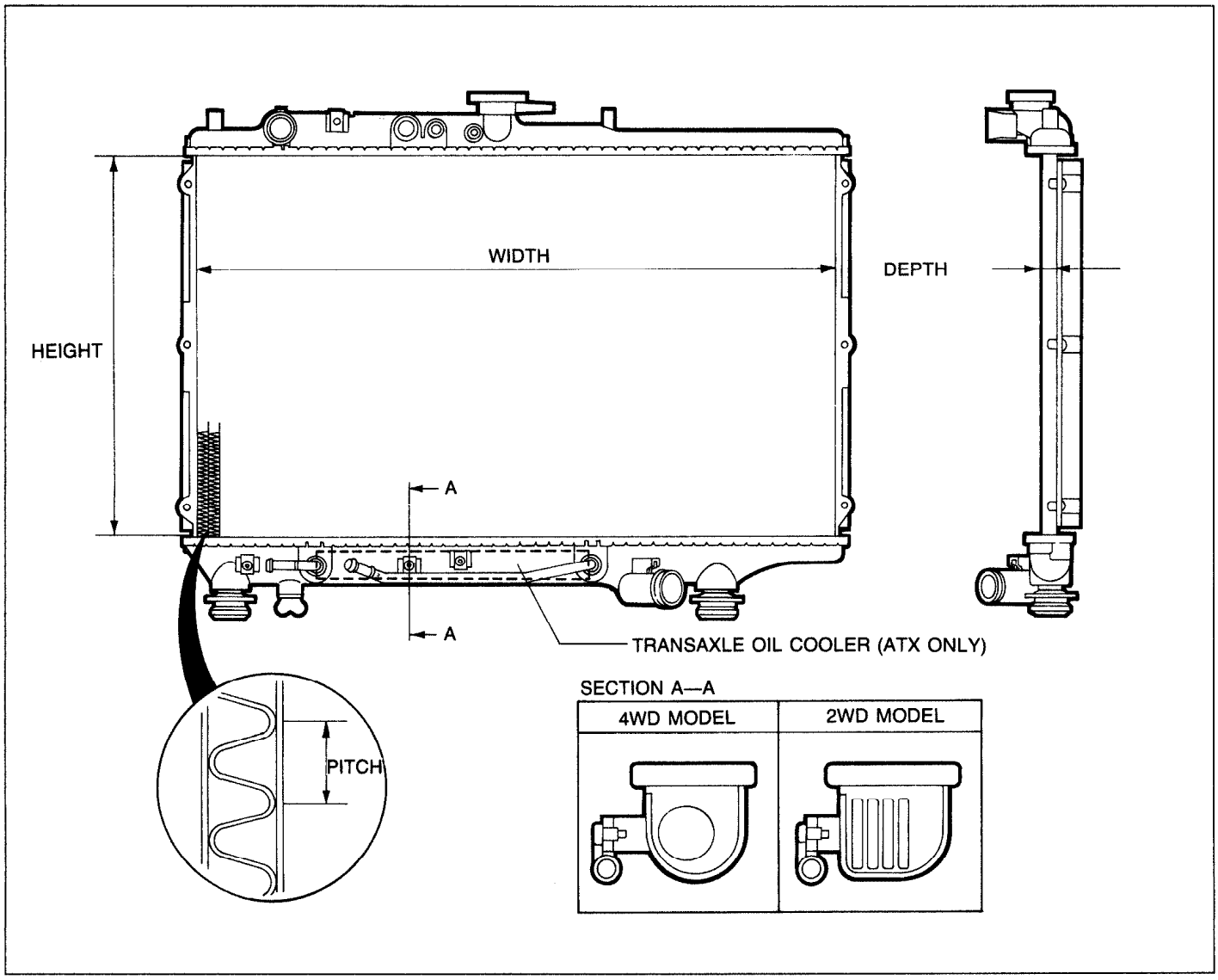

Downloaded from www.Manualslib.com manuals search engine

Downloaded from www.Manualslib.com manuals search engine

FUEL AND EMISSION CONTROL SYSTEMS

INDEX ..... F– 2

FEATURES

OUTLINE ..... F– 3
OUTLINE OF CONSTRUCTION ..... F– 3
SPECIFICATIONS ..... F– 3
SYSTEM DIAGRAM ..... F– 4
WIRING DIAGRAM ..... F– 5
FUEL SYSTEM ..... F– 6
OUTLINE ..... F– 6
FUEL TANK AND TRANSFER PUMP ..... F– 7
A/C CUT-OFF SYSTEM ..... F– 9

SERVICE

SUPPLEMENTAL SERVICE INFORMATION .. F– 9
FUEL SYSTEM ..... F– 9
PRECAUTION ..... F– 9
FUEL TANK F–10
TRANSFER PUMP CONTROL SYSTEM F–11
SYSTEM OPERATION F–11
4x4 CONTROL UNIT
(FUEL PUMP CONTROL UNIT) F–12
TRANSFER PUMP SWITCH F–13
TRANSFER PUMP F–13
EXHAUST SYSTEM F–15
COMPONENTS F–15

03U0FX-801

Downloaded from www.Manualslib.com manuals search engine

INDEX

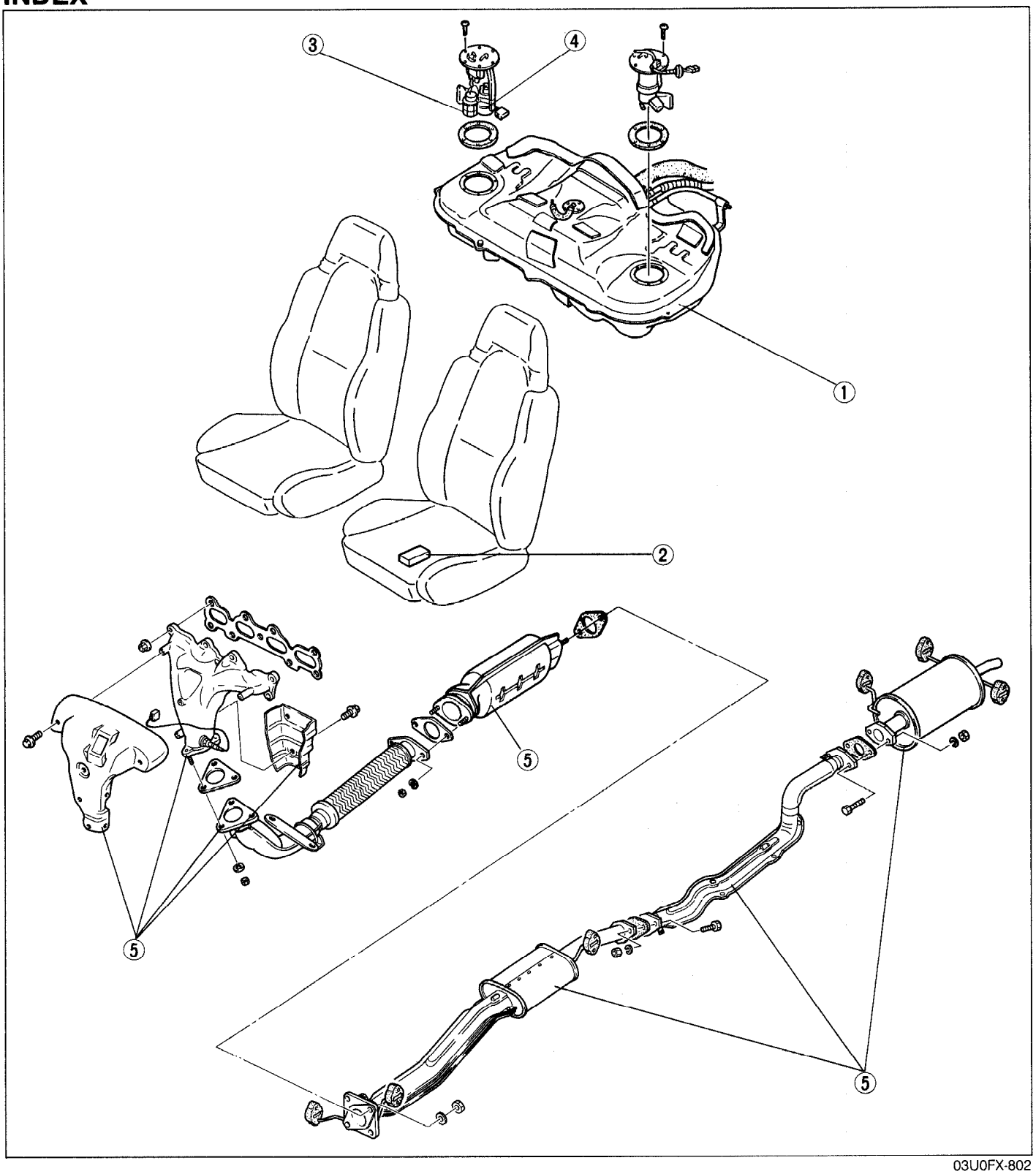

03U0FX-802

1. Fuel tank
Removal / Inspection / Installation ..... page F–10
2. 4x4 control unit (Fuel pump control unit)
Inspection ..... page F–12
Replacement ..... page F–12
3. Transfer pump switch
Removal / Installation ..... page F–13
Inspection ..... page F–13
4. Transfer pump
Inspection ..... page F–13
Replacement ..... page F–13
5. Exhaust system components
Removal / Inspection / Installation ..... page F–15

Downloaded from www.Manualslib.com manuals search engine

OUTLINE

OUTLINE OF CONSTRUCTION

The fuel and emission control system of the 1990 323 4WD is basically the same as that of the 1990 323 2WD, however, the fuel tank is designed with separate right and left sections due to the installation of the propeller shaft for the 4-wheel-drive system and the transfer pump is equipped to pump the fuel from the left to the right (fuel pump side) section of the fuel tank.
A water thermoswitch is equipped for A/C cut-off system.

03U0FX-803

SPECIFICATIONS

Item \ Engine			BP SOHC
Idle speed*1		rpm	750 ± 50
Ignition timing*2		BTDC	5 ± 1°
Fuel pump			
Maximum output pressure		kPa (kg/cm², psi)	441—589 (4.5—6.0, 64—85)
Transfer pump			
Maximum output pressure		kPa (kg/cm², psi)	More than 39 (0.4, 5.7)
Fuel filter			
Type	Low-pressure side		Nylon element
	High-pressure side		Paper element
Pressure regulator			
Regulating pressure		kPa (kg/cm², psi)	264—314 (2.7—3.2, 38.3—45.5)
Injector			
Type			High-ohmic
Type of drive			Electric
Resistance		Ω	12—16
Idle speed control (ISC) valve			
Type			Rotary
Resistance		Ω	11—13
Solenoid valve (Purge control)			
Resistance		Ω	23—27
Water themosensor			
Resistance		kΩ	−20°C (−4°F)	14.6—17.8
			20°C (68°F)	2.21—2.69
			40°C (104°F)	1.0—1.3
			80°C (176°F)	0.29—0.35
Airflow meter				
Resistance	Ω	E2 ↔ Vs	Fully closed	200—600
			Fully open	20—1,200
		E2 ↔ Vc		200—400
		E2 ↔ THAA (Intake air thermosensor)	−20°C (−4°F)	13,600—18,400
			20°C (68°F)	2,210—2,690
			60°C (140°F)	493—667
		E1 ↔ Fc	Fully closed	∞
			Fully open	0
Fuel tank				
Capacity		liters (US gal, Imp gal)	60 (15.8, 13.2)
Air cleaner			
Element type			Oil permeated
Fuel			
Specification			Unleaded regular (RON 91 or higher)

03U0FX-804

***1 With parking brake applied (Canada).**
***2 TEN terminal of diagnosis connector grounded.**

The ▒▒▒ mark indicates newly equipped parts.

Downloaded from www.Manualslib.com manuals search engine

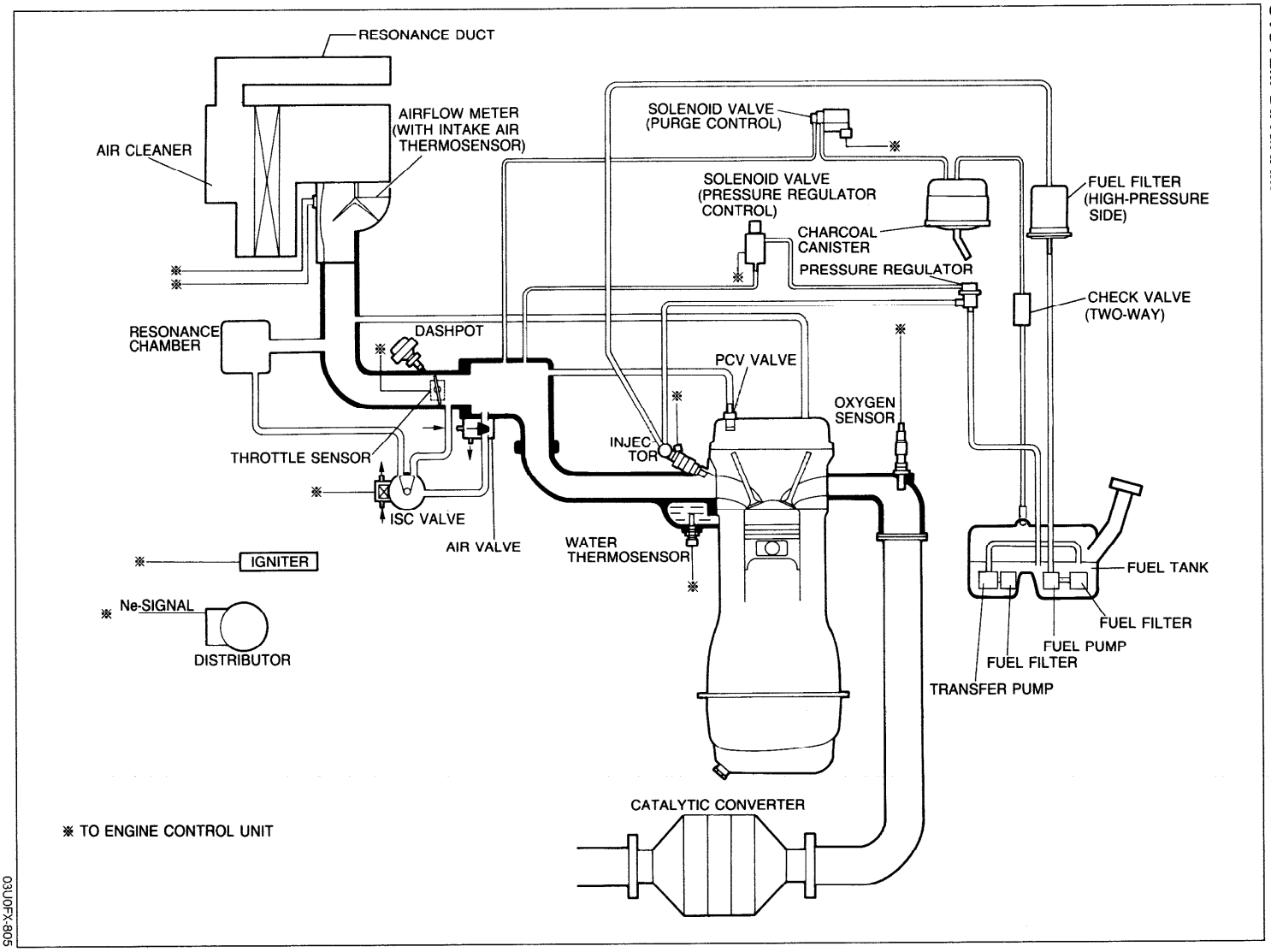

03U0FX-805

Downloaded from www.Manualslib.com manuals search engine

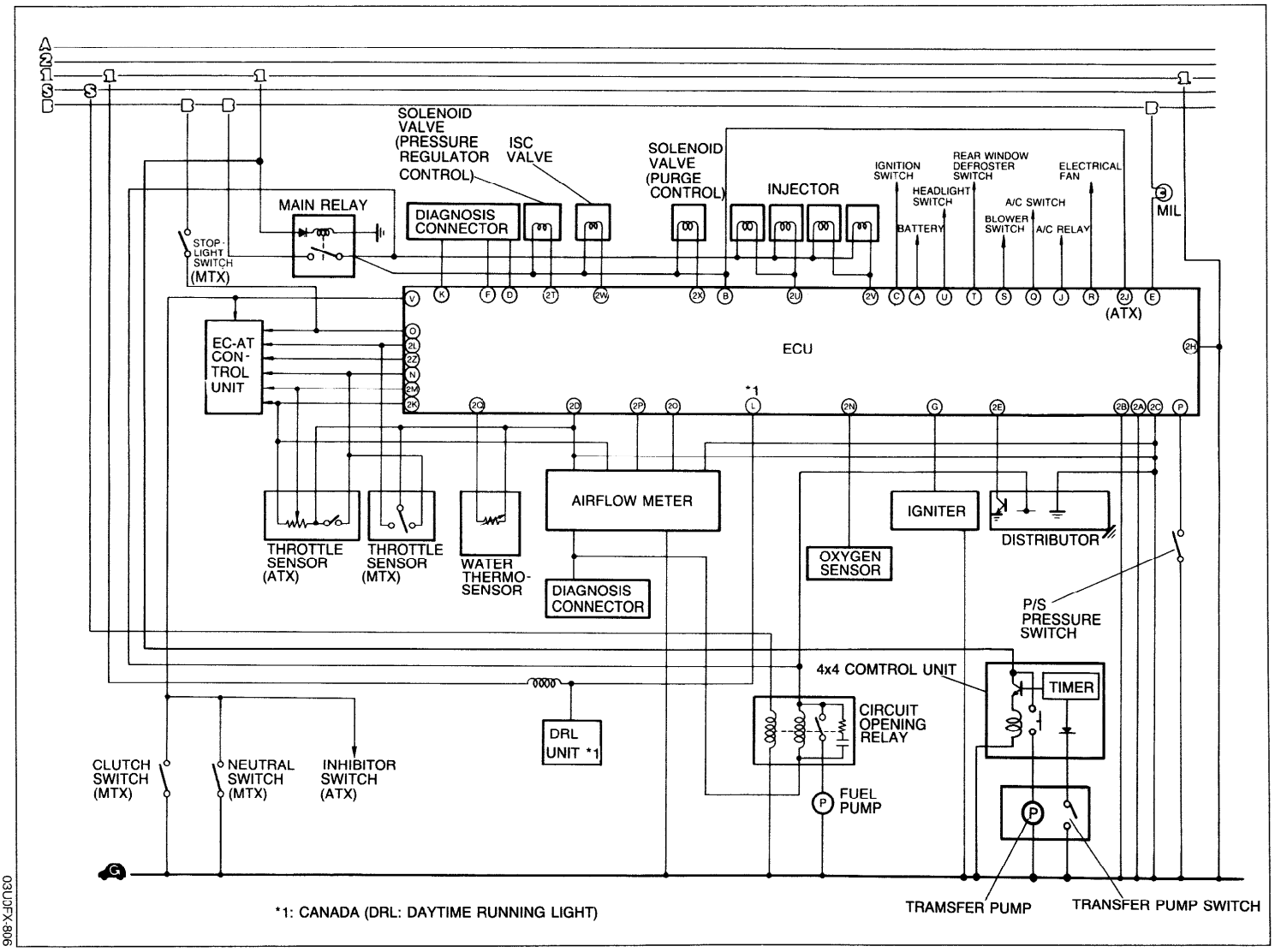

Downloaded from www.Manualslib.com manuals search engine

FUEL SYSTEM

OUTLINE

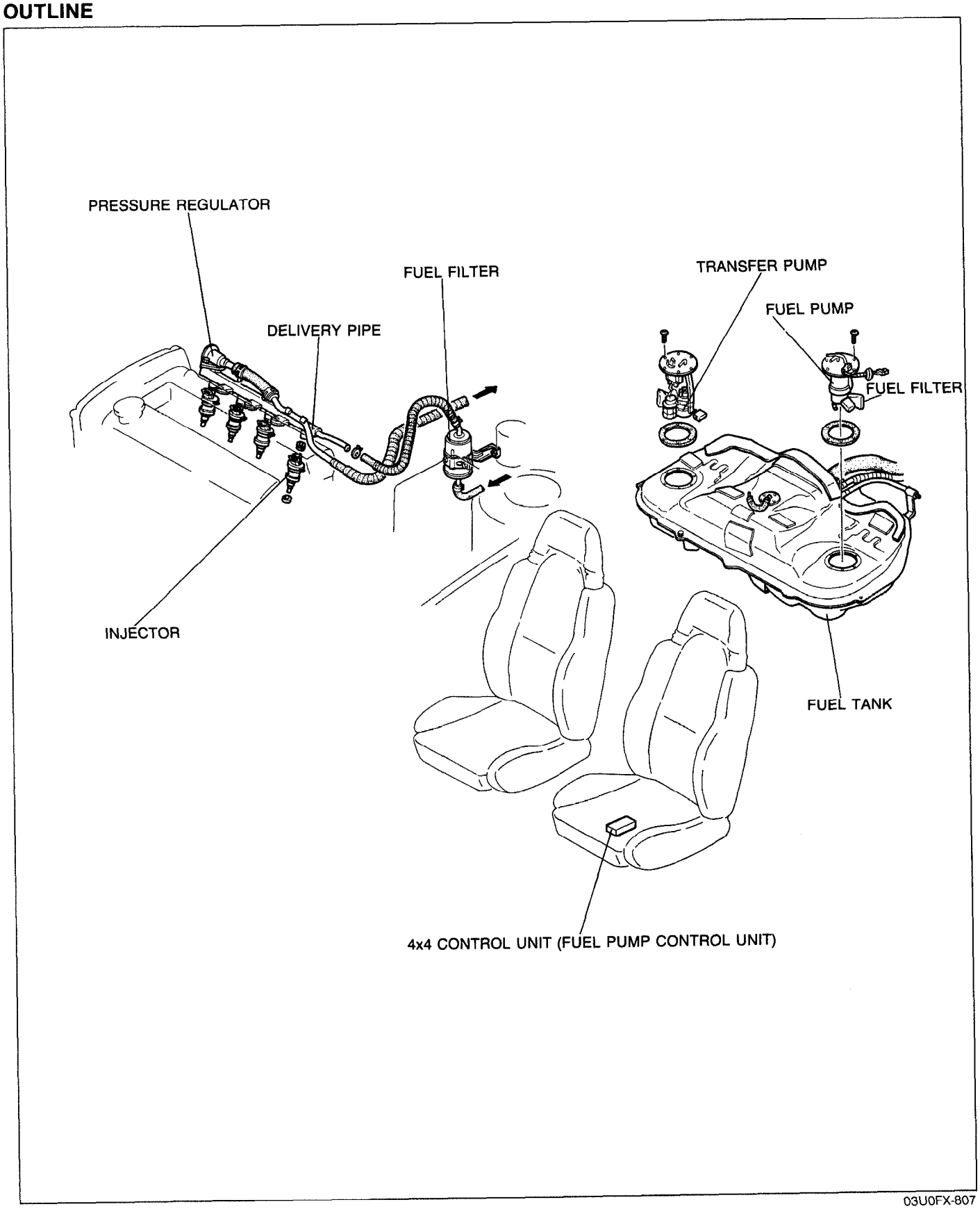

03U0FX-807

The fuel system consists of the fuel tank, the transfer pump, the fuel pump, the fuel filters, the pressure regulator, the delivery pipe, the injectors, and the 4x4 control unit (fuel pump control unit).

Downloaded from www.Manualslib.com manuals search engine

FUEL TANK AND TRANSFER PUMP

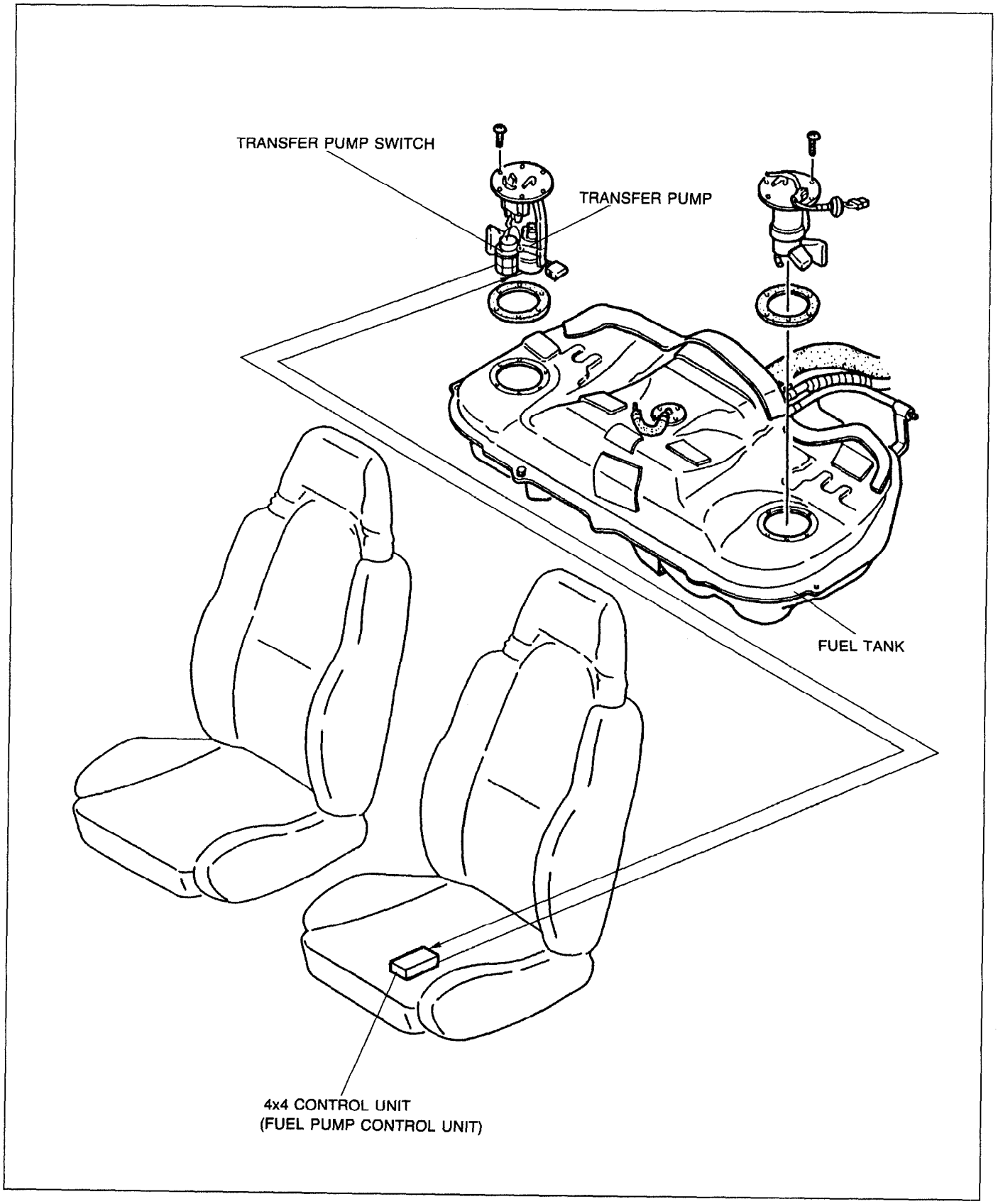

03U0FX-808

The fuel tank is designed with a separate right and left section due to the installation of the propeller shaft for the 4-wheel-drive system.

A transfer pump is used to pump the fuel from the left to the right (fuel pump) side. The transfer pump is installed in the fuel tank, and is controlled by the transfer pump switch and the fuel pump control unit (included in the 4x4 control unit).

Downloaded from www.Manualslib.com manuals search engine

Transfer Pump Control

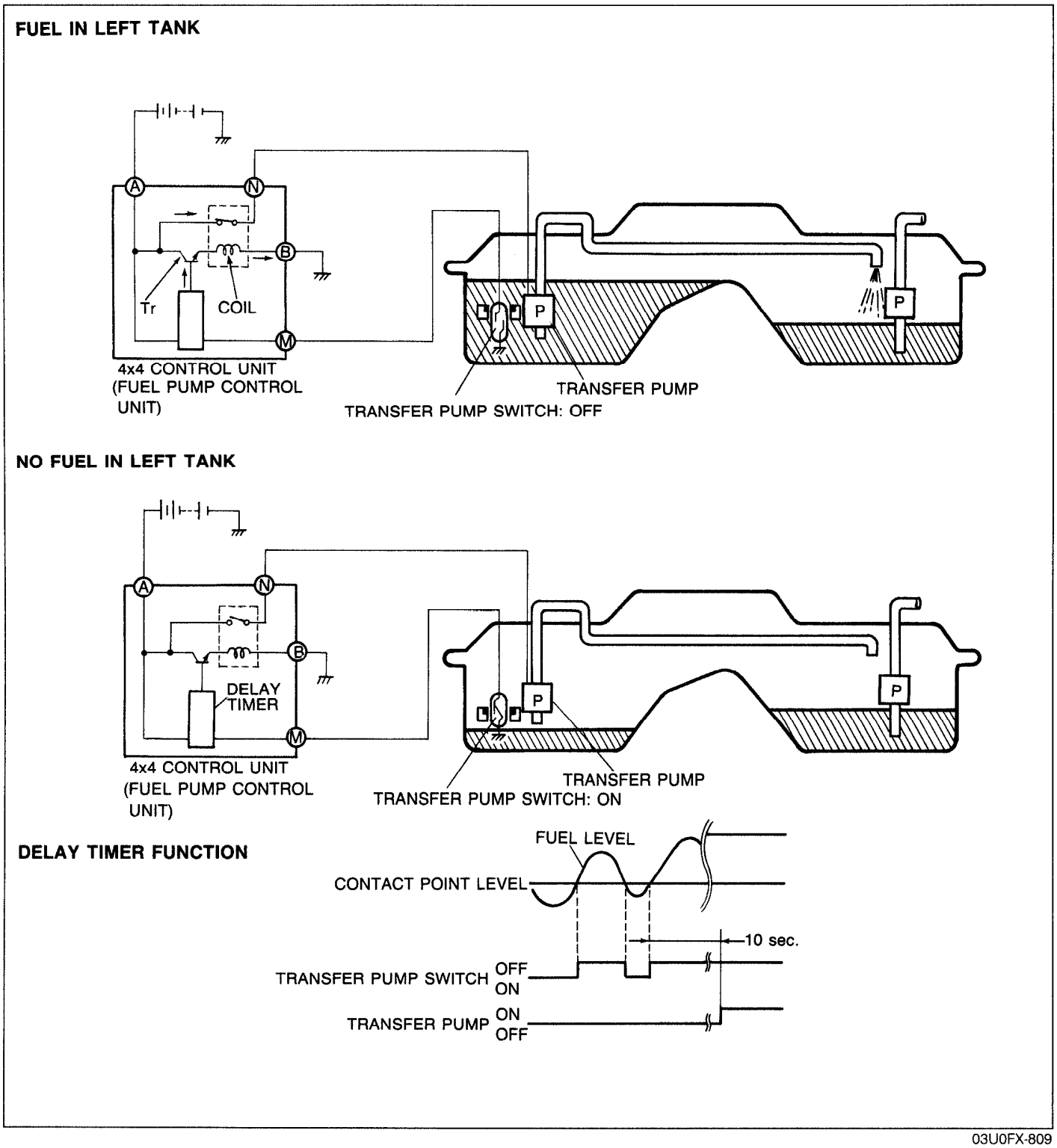

03U0FX-809

Fuel in left tank

The transfer pump switch is OFF, and the transistor within the fuel pump control unit is ON.
As a result, current flows to the coil, the switch is switched ON, and the transfer pump is activated.

No fuel in left tank

The transfer pump switch is ON, and the transistor within the fuel pump control unit is OFF.
As a result, the current to the coil is interrupted, the switch is switched OFF, and the transfer pump is stopped.
When in this condition, if the vehicle were driven on a rough road surface, the fuel level would vary up and down and fuel pump would switch ON and OFF.
The transfer pump would then operate excessively, shortening the pump life. In order to prevent this, a ten-second delay circuit is provided within the fuel pump control unit.

Downloaded from www.Manualslib.com manuals search engine

A/C CUT-OFF SYSTEM (For ATX)

To improve the reliability of the engine at high temperature condition, the water thermoswitch on the radiator is switched OFF **above approx. 111°C (232°F)** and stops the A/C operation.

03U0FX-829

SUPPLEMENTAL SERVICE INFORMATION

The following points in this section are changed in comparison with 1990 Mazda 323 Workshop Manual (1195-10-89E).

Fuel tank
- Removal / Inspection / Installation

4x4 control unit (Fuel pump control unit)
- Inspection procedure added
- Replacement procedure added

Transfer pump switch
- Inspection procedure added
- Replacement procedure added

Transfer pump
- Inspection procedure added
- Replacement procedure added

Exhaust system components
- Removal / Inspection / Installation

03U0FX-810

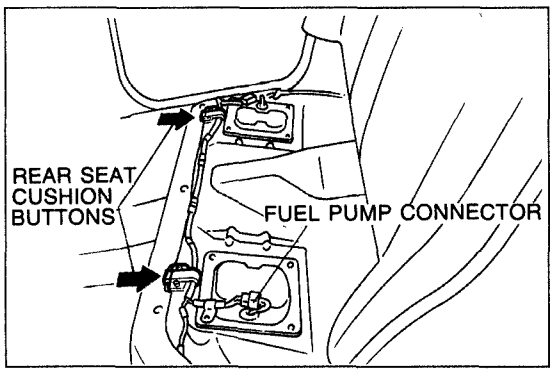

03U0FX-811

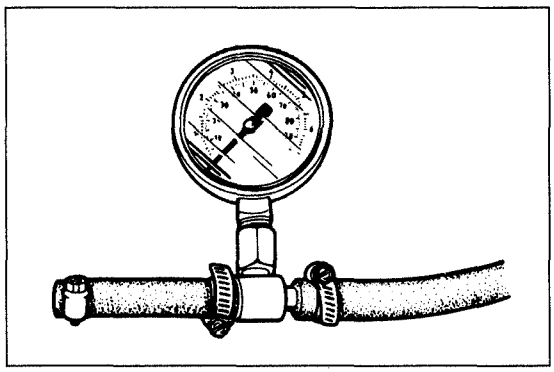

9MU0F2-122

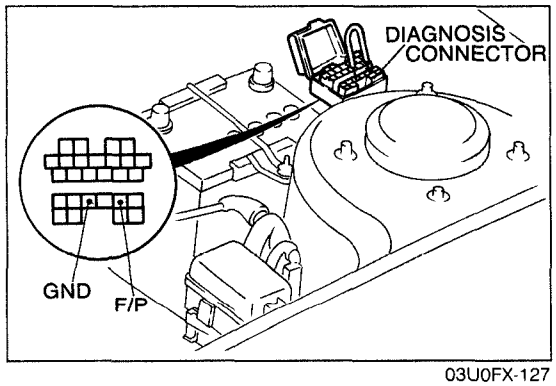

03U0FX-127

FUEL SYSTEM

PRECAUTION

Fuel Pressure Release and Servicing Fuel System

Fuel in the fuel system remains under high pressure when the engine is not running.

a) Before disconnecting any fuel line, release the fuel pressure from the fuel system to reduce the possibility of injury or fire.
   1. Start the engine.
   2. Push the rear seat cushion buttons and remove the cushion.
   3. Disconnect the fuel pump connector.
   4. After the engine stalls, turn off the ignition switch.
   5. Reconnect the fuel pump connector and install the rear seat cushion.

b) Use a rag as protection from fuel spray when disconnecting the hoses.
   Plug the hoses after removal.

c) When inspecting the fuel system, use a suitable fuel pressure gauge.

Caution
- **Install hose clamps to secure the fuel pressure gauge to the fuel filter and the fuel main hose to prevent fuel leakage.**

Priming Fuel System

After releasing the fuel pressure for repairs or inspection, the system must be primed to avoid excessive cranking when first starting the engine. Follow the steps below.

1. Connect the diagnosis connector terminals **F/P** and **GND** with a jumper wire.
2. Turn the ignition switch ON for **approx. 10 sec.** and check for fuel leaks.
3. Turn the ignition switch OFF and remove the jumper wire.

Downloaded from www.Manualslib.com manuals search engine

FUEL TANK
Removal / Inspection / Installation

Warning
- **Before performing the following operation, release the fuel pressure from the fuel system to reduce the possibility of injury or fire. (Refer to page F–9.)**
- **When removing the fuel tank, keep sparks, cigarettes, and open flames away from it.**
- **Before repairing the fuel tank, clean it throughly with steam to remove all explosive gas.**

1. Remove in the order shown in the figure.
2. Inspect the fuel tank components visually and repair or replace if necessary.
3. Install in the reverse order of removal, referring to **Installation Note**.

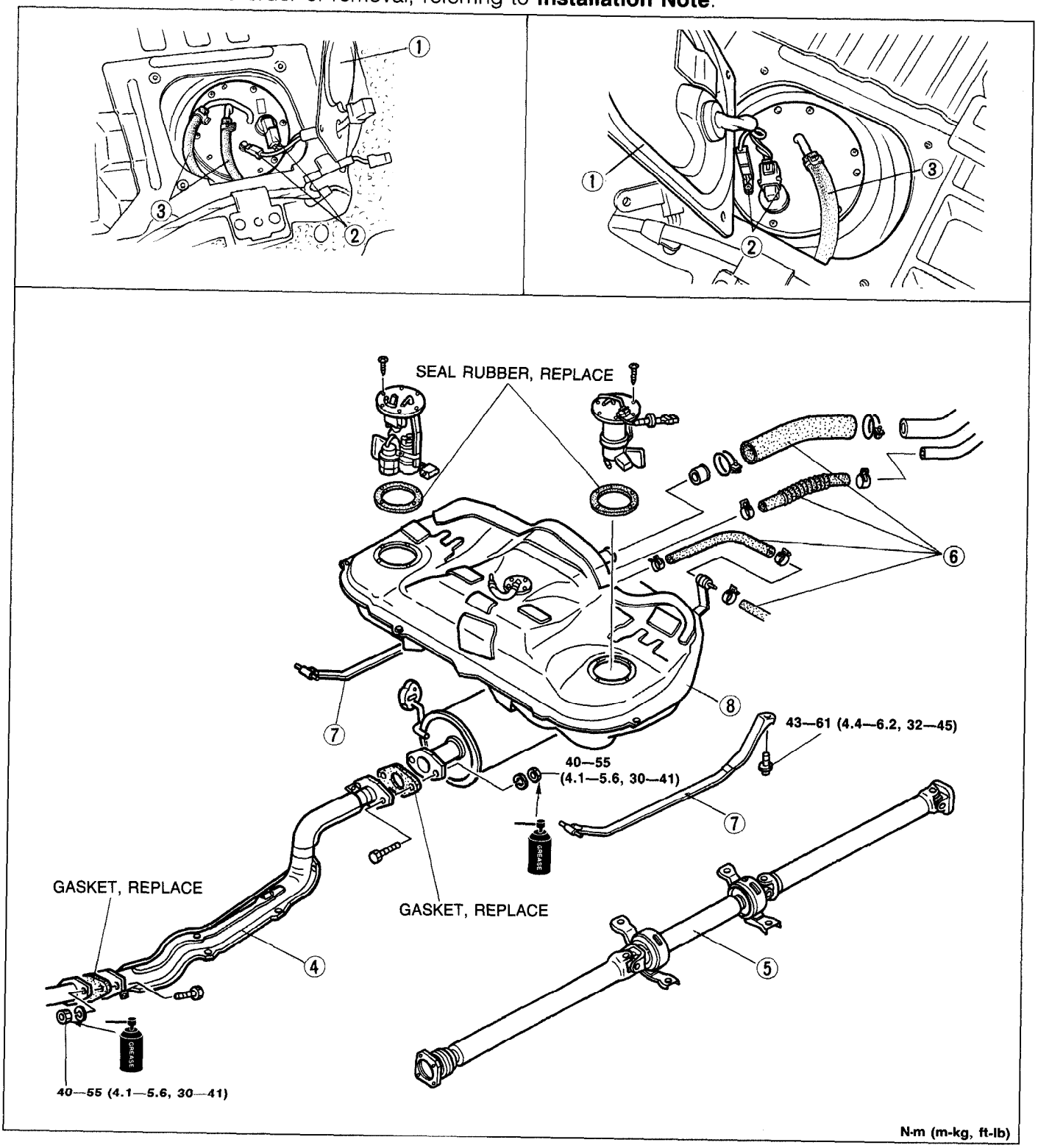

03U0FX-812
Downloaded from www.Manualslib.com manuals search engine

Note
- **Drain the fuel from the fuel tank before removing the tank.**

1. Fuel pump cover
2. Fuel pump connector
3. Fuel hoses
   Installation Note ..... page F–11
4. Exhaust pipe
   Removel / Installation ..... page F–15
5. Propeller shaft
   Removal / Installation ..... Section L
6. Fuel filler hose, breather hose, and evaporation hoses
   Installation Note ..... page F–11
7. Fuel tank straps
8. Fuel tank
   Inspect for cracks and corrosion

03U0FX-813

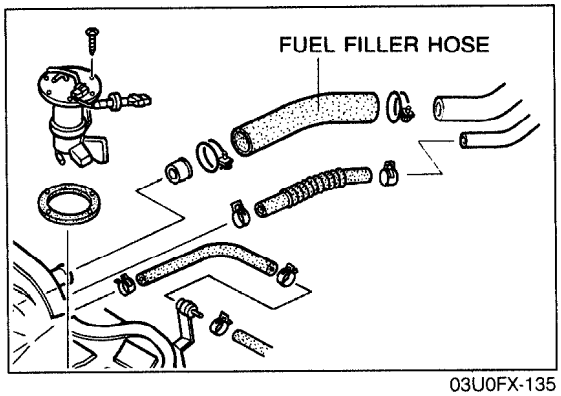

03U0FX-135

Installation Note
1. Push the ends of the main fuel hose, fuel return hose, and evaporative hoses onto the fuel tank fittings **at least 25mm (1.0 in)**.
2. Push the fuel filler hose onto the fuel tank pipe and filler pipe **at least 35mm (1.4 in)**.

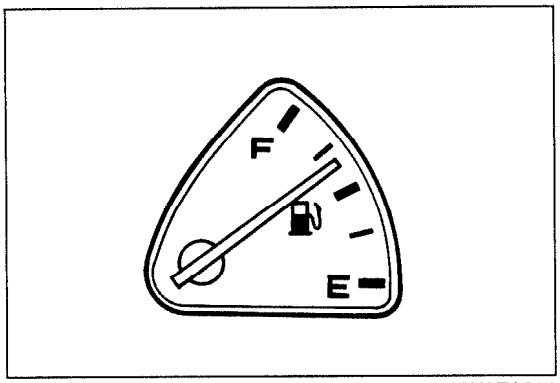

03U0FX-814

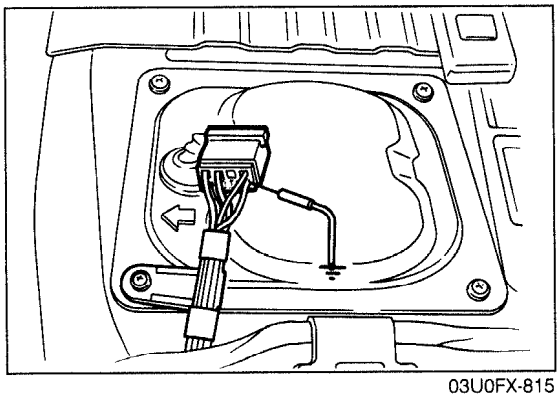

03U0FX-815

TRANSFER PUMP CONTROL SYSTEM

SYSTEM OPERATION

1. Turn the ignition switch ON and verify that the fuel gauge indicates more than half and that the transfer pump operating sound is heard.

   Warning
   - **If the fuel level is less than one half, this inspection cannot be performed.**

2. Ground the transfer pump connector terminal-wire (Y/L) with a jumper wire and verify that the transfer pump stops.
3. Remove the jumper wire and verify that the transfer pump begins operation after **approx. 10 sec**.
4. If not as specified, check the following parts.
   - 4x4 control unit (Fuel pump control unit). (Refer to page F–12.)
   - Transfer pump. (Refer to page F–13.)
   - Transfer pump switch. (Refer to page F–13.)

Downloaded from www.Manualslib.com manuals search engine

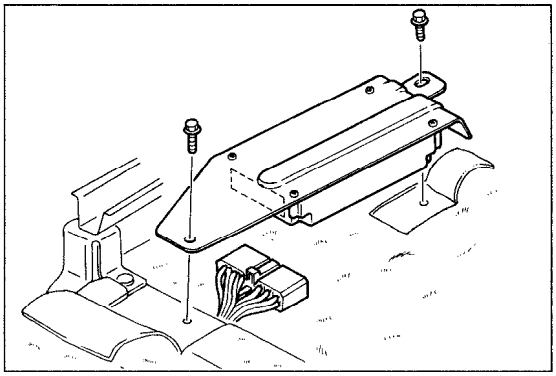

03U0FX-816

4x4 CONTROL UNIT (FUEL PUMP CONTROL UNIT)

Inspection

1. Remove the 4x4 control unit.

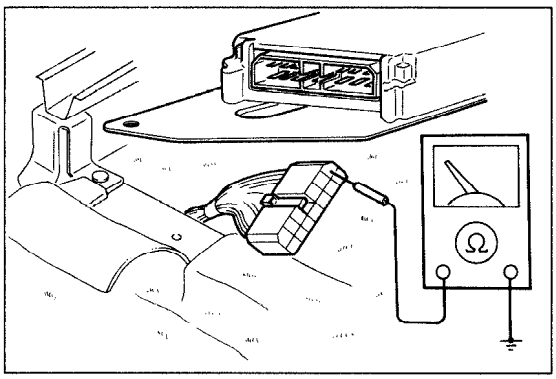

03U0FX-817

2. Disconnect the 4x4 control unit connector.
3. Check continuity between the 4x4 control unit connector terminal M and a ground.
4. Perform the following inspection according to the continuity.

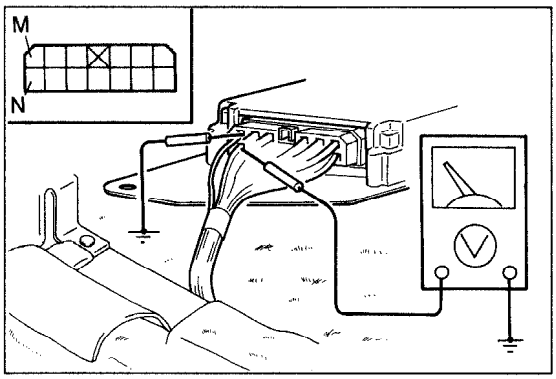

03U0FX-818

Continuity exists

1. Turn the ignition switch ON.
2. Ground the 4x4 control unit terminal M with a jumper wire and verify that the voltage at the 4x4 control unit terminal N is **0V**.
3. Remove the jumper wire and verify that the voltage at the 4x4 control unit terminal N is **approx. 12V** after **approx. 10 sec.**.

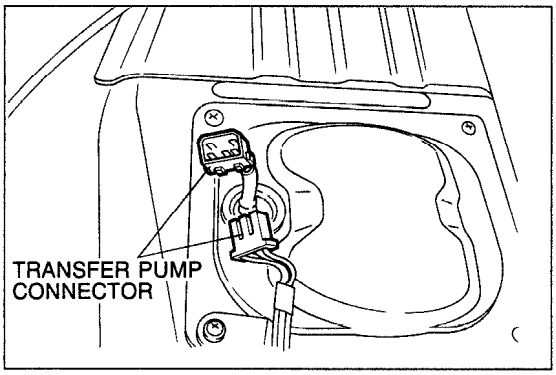

03U0FX-819

No continuity exists

1. Turn the ignition switch ON and verify that the voltage at the 4x4 control unit terminal N is **0V**.
2. Disconnect the transfer pump connector.
3. Turn the ignition switch ON and verify that the voltage at the 4x4 control unit terminal N is **approx. 12V**.

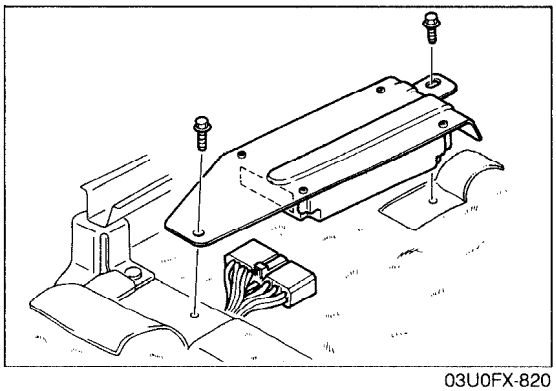

03U0FX-820

Replacement

1. Remove two bolts and remove the 4x4 control unit and the bracket as an assembly.
2. Remove the 4x4 control unit from the bracket.
3. Install in the reverse order of removal.

Downloaded from www.Manualslib.com manuals search engine

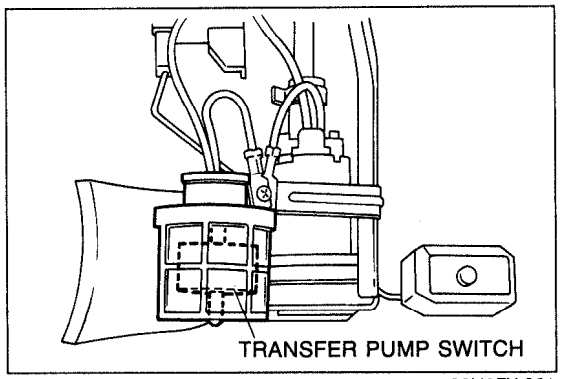

03U0FX-821

TRANSFER PUMP SWITCH

Removal / Installation

1. Refer to replacement of the transfer pump. (Refer to page F–13.)

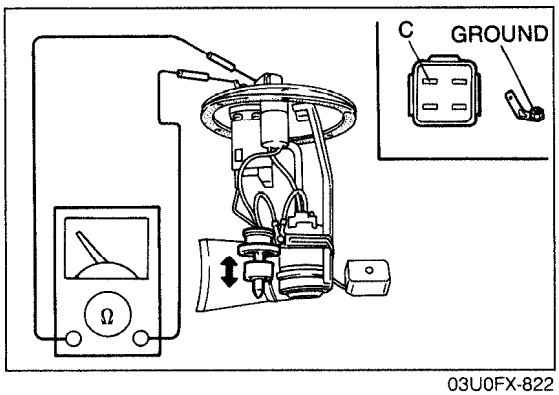

03U0FX-822

Inspection

1. Check continuity between transfer pump connector terminal C and ground terminal.

Float position	Continuity
Up	No
Down	Yes

2. If not as specified, replace the transfer pump switch.

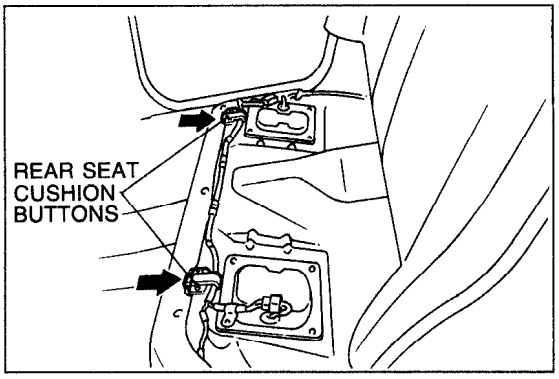

03U0FX-823

TRANSFER PUMP

Inspection

1. Remove the rear seat cushion.

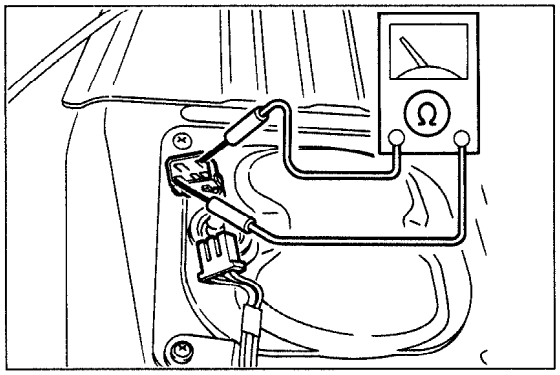

03U0FX-824

2. Disconnect the transfer pump connector.
3. Check for continuity between transfer pump connector terminal-wires (B/W) and (Y).
4. If no continuity exists, replace the transfer pump.

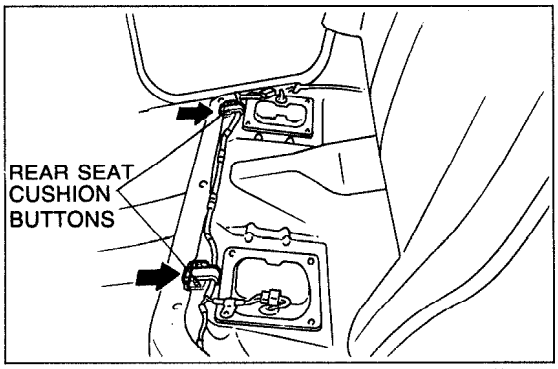

03U0FX-825

Replacement

Warning

- **When servicing the fuel system, keep sparks, cigarettes, and open flames away from the fuel.**

1. Remove the rear seat cushion.

Downloaded from www.Manualslib.com manuals search engine

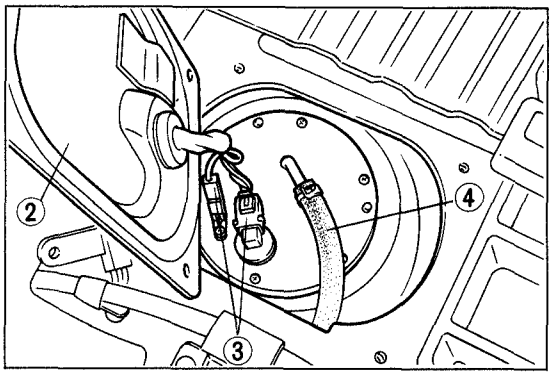

03U0FX-826

2. Remove the service hole cover of the transfer pump.
3. Disconnect the transfer pump connectors.
4. Disconnect the fuel hose.
5. Remove the transfer pump.

Caution
- **Install a new seal rubber.**

6. Install in the reverse order of removal.

Disassembly / Assembly

Caution
- **Prevent contaminants from entering into the transfer pump.**

1. Disassemble in the order shown in the figure.
2. Assemble in the reverse order of disassembly.
3. Verify that the transfer pump operates correctly after assembling it.

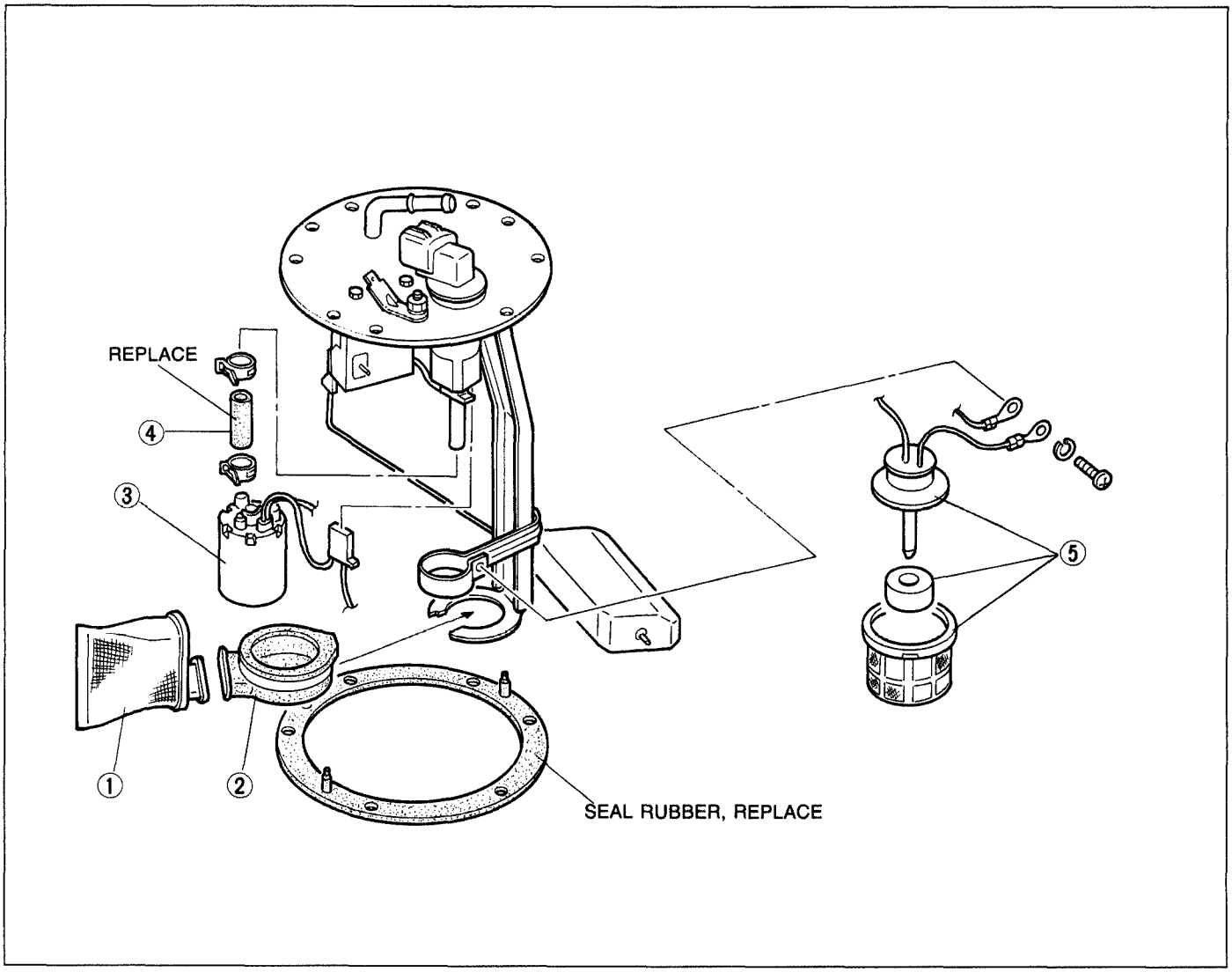

03U0FX-827

1. Fuel filter
2. Rubber mount
3. Transfer pump
4. Fuel hose
5. Transfer pump switch

Downloaded from www.Manualslib.com manuals search engine

EXHAUST SYSTEM

COMPONENTS

Removal / Inspection / Installation

1. Remove in the order shown in the figure.
2. Check the exhaust system components and repair or replace as necessary.
3. Install in the reverse order of removal.

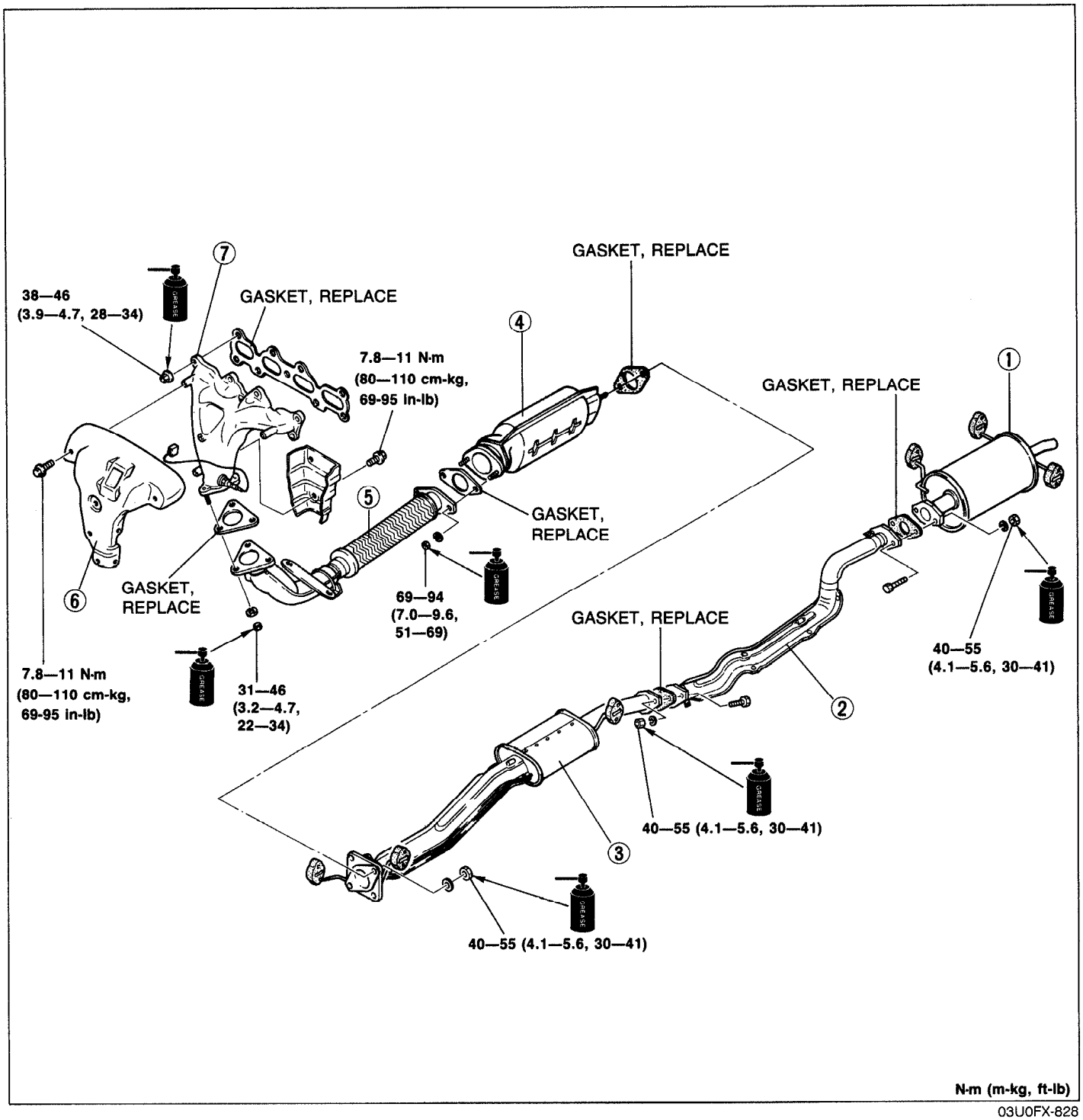

03U0FX-828

1. Main silencer
   Inspect for deterioration and restriction
2. Middle pipe assembly
   Inspect for deterioration and restriction
3. Pre-silencer
   Inspect for deterioration and restriction
4. Catalytic converter
   Inspect for deterioration and restriction
5. Front pipe assembly
   Inspect for deterioration and restriction
6. Exhaust manifold insulator
7. Exhaust manifold
   Inspect for deterioration and restriction

Downloaded from www.Manualslib.com manuals search engine

Downloaded from www.Manualslib.com manuals search engine

ENGINE ELECTRICAL SYSTEM

INDEX ..... **G– 2**

FEATURES

OUTLINE ..... **G– 3**
OUTLINE OF CONSTRUCTION ..... **G– 3**
SPECIFICATIONS ..... **G– 3**

SERVICE

SUPPLEMENTAL SERVICE INFORMATION .. **G– 4**
STARTING SYSTEM ..... **G– 4**
STARTER ..... **G– 4**

03U0GX-801

Downloaded from www.Manualslib.com manuals search engine

INDEX

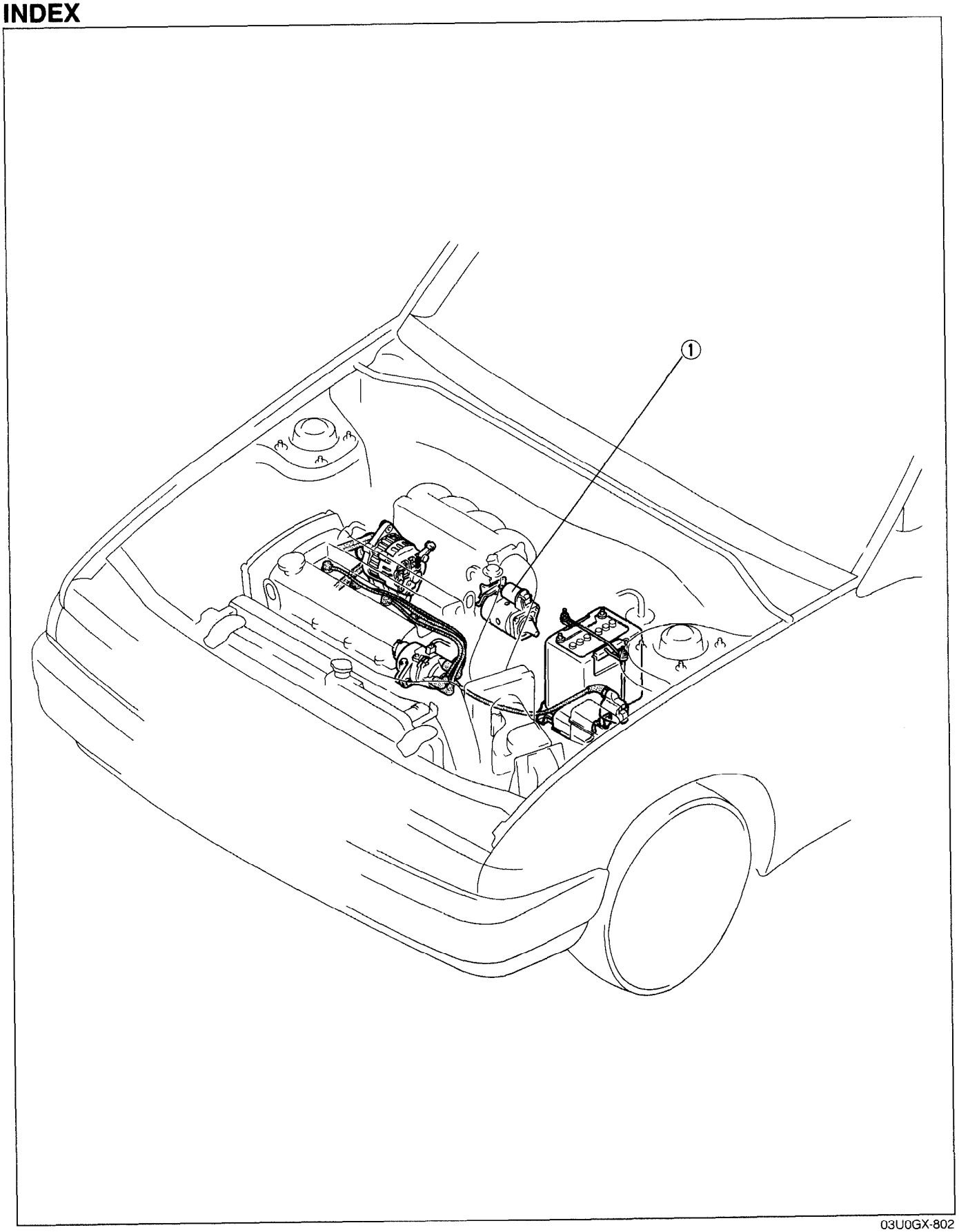

03U0GX-802

1. Starter
   Removal / Installation..... page G–4

Downloaded from www.Manualslib.com manuals search engine

OUTLINE

OUTLINE OF CONSTRUCTION

The engine electrical system of the 1990 323 4WD is as same as that of the 1990 323 2WD.

03U0PX-803

SPECIFICATIONS

Item			Engine	BP SOHC	
				MTX	ATX
Battery	Voltage		V	12	
	Type and capacity (20-hour rate)			55D23L (60AH)	
Dark current*1			mA	Max. 20.0	
Alternator	Type			A.C.	
	Output		V-A	12-65	
	Regulator type			Transistorized (built-in IC regulator)	
	Regulated voltage		V	14.1—14.7	
	Brush length mm (in)	Standard		21.5 (0.846)	
		Minimum		8.0 (0.315)	
	Drive belt deflection 98 N (10 kg, 22 lb) mm (in)	New		8—9 (0.31—0.35)	
		Used		9—10 (0.35—0.39)	
Starter	Type			Direct	Coaxical reduction
	Output		V-kW	12-0.85	12-1.4
	Brush length mm (in)	Standard		17 (0.67)	17.5 (0.69)
		Minimum		11.5 (0.453)	10.0 (0.39)
Distributor				Electronic spark advance (photo diode)	
Ignition timing (TEN terminal of diagnosis connector grounded)			BTDC	5 ± 1°	
Ignition coil	Resistance (at 20°C [68°F])	Primary coil winding		0.81—0.99Ω	
		Secondary coil winding		10—16 kΩ	
Spark plug	Type	NGK		BKR5E11 BKR6E11	
		Nippon Denso		K16PR-U11 K20PR-U11	
	Plug gap		mm (in)	1.0—1.1 (0.039—0.043)	
	Firing order			1—3—4—2	

03U0GX-804

*1 Dark current is the constant flow of current while the ignition switch is OFF. (i.e., engine control unit, EC-AT control unit, audio, etc.)

Downloaded from www.Manualslib.com manuals search engine

SUPPLEMENTAL SERVICE INFORMATION

The following point in this section is changed in comparison with 1990 Mazda 323 Workshop Manual (1195-10-89E).

Starter
- Removal / Installation

03U0GX-805

STARTING SYSTEM

STARTER

Removal / Installation

1. Remove in the order shown in the figure.
2. Inspect all parts and repair or replace as necessary.
3. Install in the reverse order of removal.

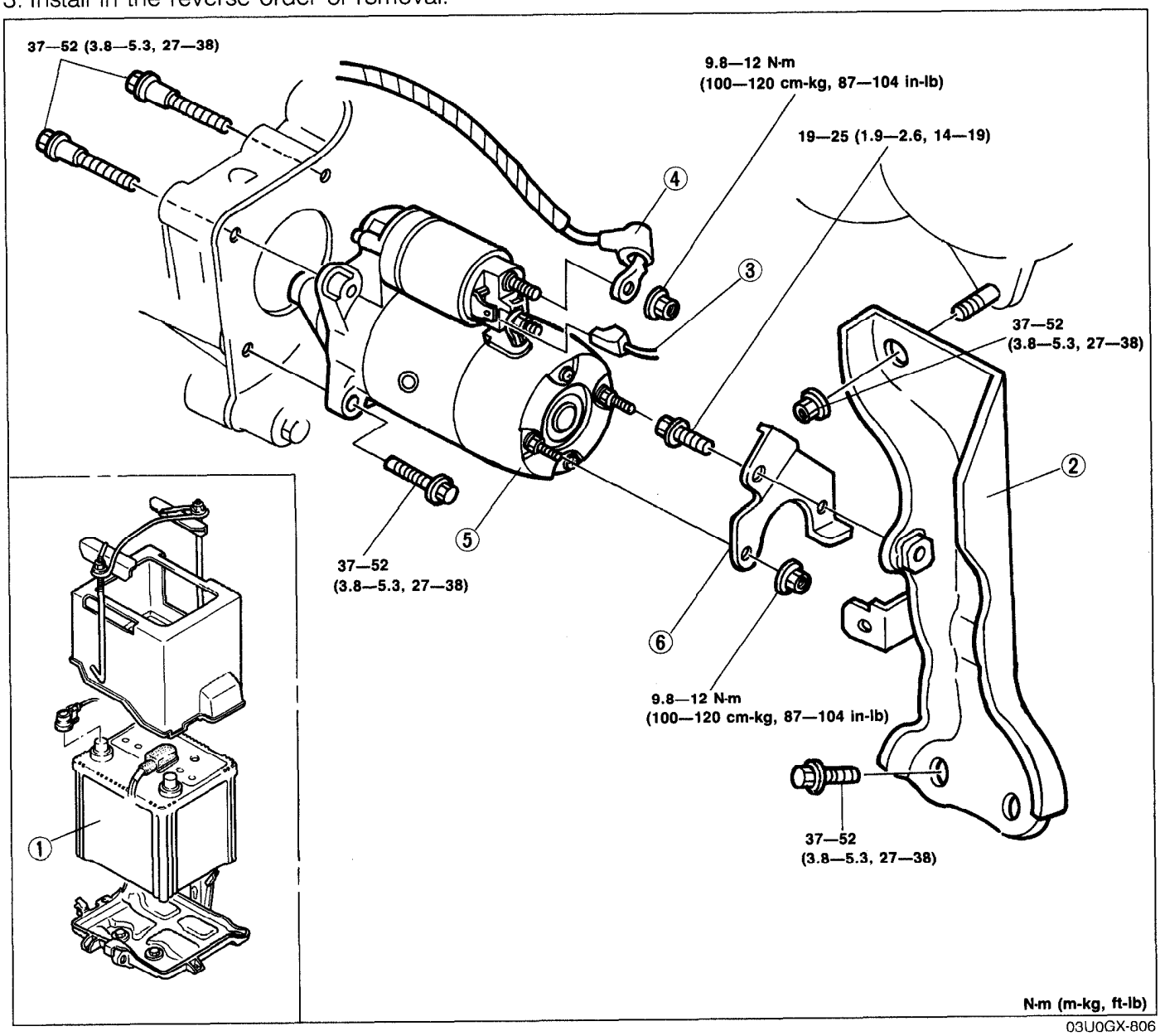

03U0GX-806

1. Battery
2. Intake manifold bracket
3. S terminal wire
4. B terminal wire
5. Starter
   Remove from upper side of vehicle
6. Starter bracket (MTX)

Downloaded from www.Manualslib.com manuals search engine

CLUTCH

OUTLINE ..... **H– 2**
OUTLINE OF CONSTRUCTION ..... **H– 2**
SPECIFICATIONS ..... **H– 2**
INTERCHANGEABILITY OF MAJOR COMPONENTS ..... **H– 2**
RELEASE BEARING ..... **H– 3**

03U0HX-801

Downloaded from www.Manualslib.com manuals search engine

OUTLINE

OUTLINE OF CONSTRUCTION

A hydraulic clutch control mechanism is used.
The basic construction is the same as that of 323 2WD model, but there is no interchangeability of component parts except for the clutch pedal, the master cylinder and the release cylinder.

1. To improve clutch operation feeling and increased parts life, a newly designed friction plate with needle roller bearings is used between the release fork and the release bearing.

03U0HX-802

SPECIFICATIONS

Item \ Engine/Transaxle Model			BP SOHC G5MX-R
Clutch control			Hydraulic
Clutch cover	Type		Diaphragm spring
	Set load N (kg, lb)		3,846 (392, 862)
Clutch disc	Outer diameter mm (in)		225 (8.86)
	Inner diameter mm (in)		150 (5.91)
	Thickness	Pressure plate side mm (in)	4.1 (0.161)
		Flywheel side mm (in)	3.5 (0.138)
Clutch pedal	Type		Suspended
	Pedal ratio		6.55
	Full stroke mm (in)		135 (5.32)
	Height (With carpet) mm (in)		196—204 (7.72—8.03)
Master cylinder inner diameter mm (in)			15.87 (0.625)
Release cylinder inner diameter mm (in)			19.05 (0.750)
Clutch fluid			SAE J1703 or FMVSS116 DOT-3

03U0HX-803

INTERCHANGEABILITY OF MAJOR COMPONENTS

The following chart shows the major components interchangeability between the 2WD model and the 4WD model.

○.....Interchangeability X.....Not interchangeability

Part name	Interchangeability	Remark
Clutch cover	X	Shape, type
Clutch disc	X	Shape diameter
Clutch pedal	○	
Master cylinder	○	
Release cylinder	○	
Release bearing	X	Shape

03U0HX-804

Downloaded from www.Manualslib.com manuals search engine

RELEASE BEARING

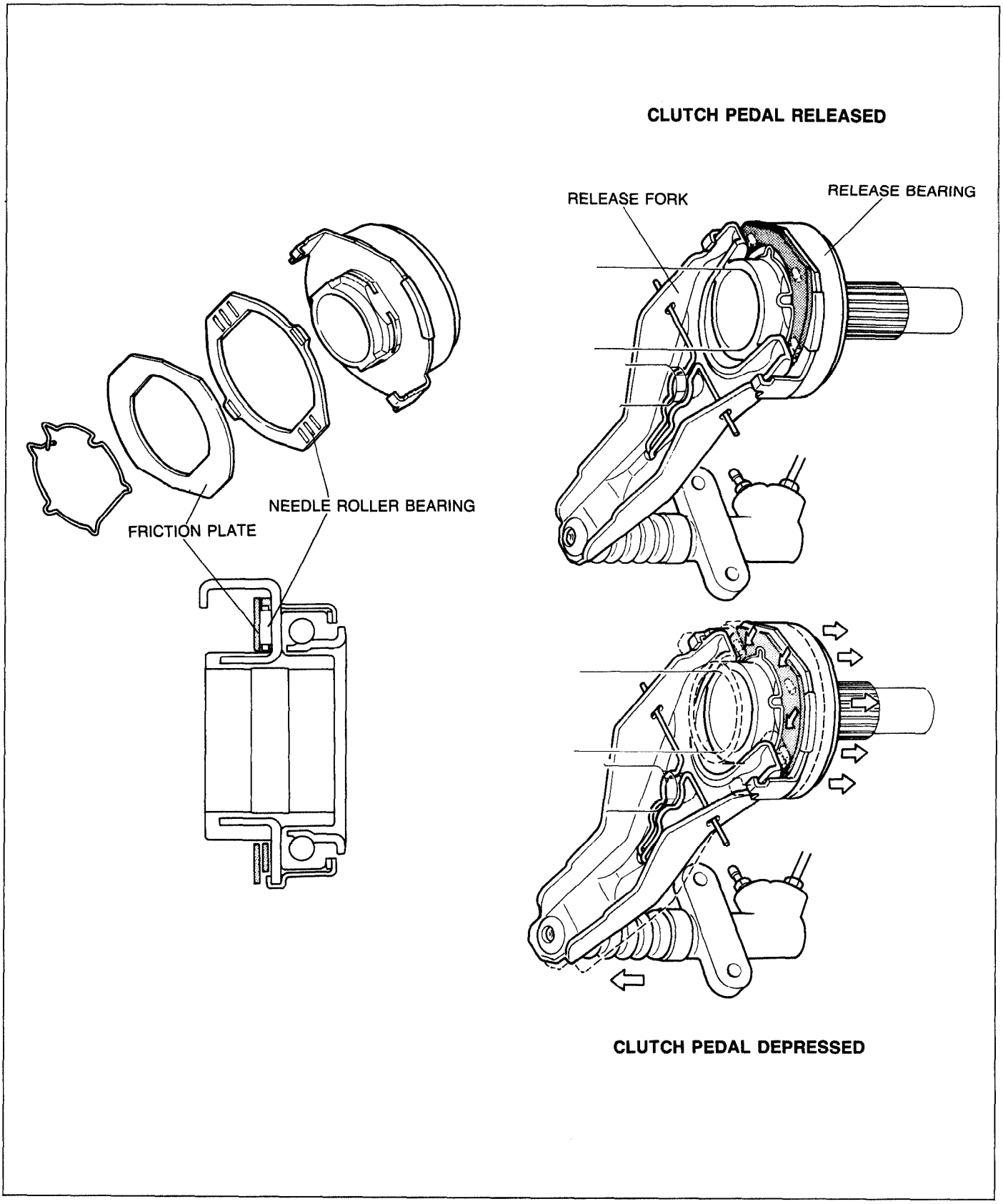

9MU0HX-505

To improve clutch operation feeling and increased parts life, a newly designed friction plate with needle roller bearings is used between the release fork and the release bearing.
With the inclusion of this friction plate, the force required to depress the clutch pedal is reduced because the usual sliding-contact action between the release bearing and the release fork is changed to a rolling action of the friction plate.

Downloaded from www.Manualslib.com manuals search engine

Downloaded from www.Manualslib.com manuals search engine

MANUAL TRANSAXLE AND TRANSFER UNIT (G5MX-R)

INDEX J3– 2

FEATURES

OUTLINE J3– 3
- OUTLINE OF CONSTRUCTION J3– 3
- SPECIFICATIONS J3– 4
- TRANSAXLE AND TRANSFER UNIT J3– 5
- STRUCTURAL VIEW J3– 8
- POWERFLOW J3– 9

SERVICE

TROUBLESHOOTING GUIDE J3– 10

TRANSAXLE AND TRANSFER UNIT OIL J3– 11
- INSPECTION J3– 11
- REPLACEMENT J3– 11

TRANSFER CARRIER OIL J3– 11
- INSPECTION J3– 11
- REPLACEMENT J3– 11

TRANSAXLE AND TRANSFER UNIT J3– 13
- PREPARATION J3– 13
- REMOVAL J3– 16
- DISASSEMBLY J3– 20
- INSPECTION J3– 45
- ASSEMBLY J3– 48
- INSTALLATION J3– 86

SHIFT MECHANISM J3– 91
- OVERHAUL J3– 91

CENTER DIFFERENTIAL LOCK SYSTEM J3– 93
- SYSTEM DIAGRAM J3– 93
- INSPECTION J3– 94

CENTER DIFFERENTIAL LOCK MOTOR J3– 95
- INSPECTION J3– 95
- REPLACEMENT J3– 95

4x4 CONTROL UNIT J3– 97
- INSPECTION J3– 97
- REPLACEMENT J3– 97

CENTER DIFFERENTIAL LOCK SWITCH J3– 98
- INSPECTION J3– 98
- REPLACEMENT J3– 98

CENTER DIFFERENTIAL LOCK SENSOR SWITCH J3– 98
- INSPECTION J3– 98
- REPLACEMENT J3– 98

03U0J3-001

Downloaded from www.Manualslib.com manuals search engine

INDEX

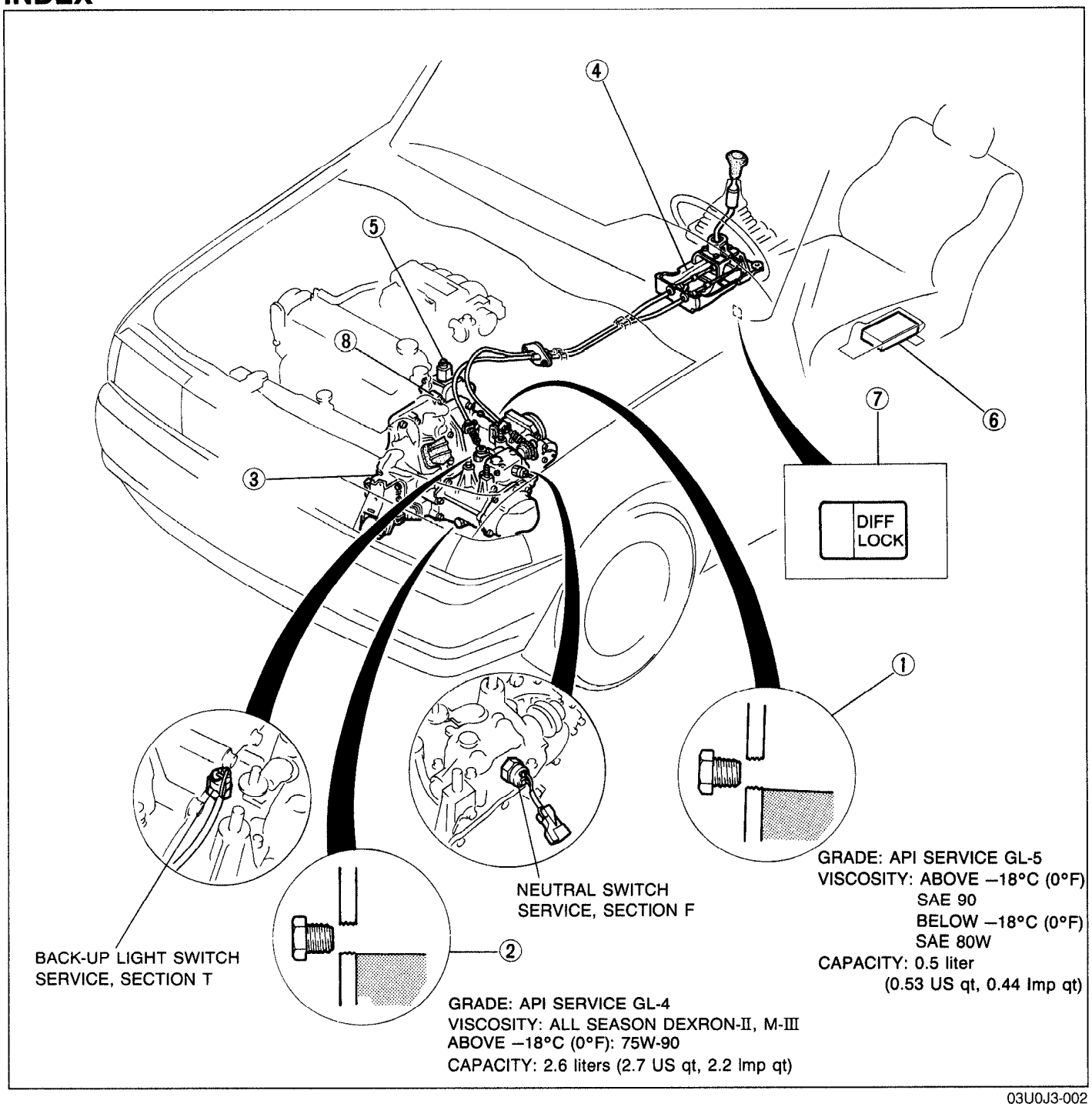

03U0J3-002

1. Transaxle oil
   - Inspection ..... page J3–11
   - Replacement ..... page J3–11
2. Transfer carrier oil
   - Inspection ..... page J3–11
   - Replacement ..... page J3–11
3. Transaxle and transfer unit
   - Removal ..... page J3–16
   - Disassembly ..... page J3–20
   - Inspection ..... page J3–45
   - Assembly ..... page J3–48
   - Installation ..... page J3–86
4. Shift mechanism
   - Overhaul ..... page J3–91
5. Center differential lock motor
   - Inspection ..... page J3–95
   - Replacement ..... page J3–95
6. 4x4 Control unit
   - Inspection ..... page J3–97
   - Replacement ..... page J3–97
7. Center differential lock switch
   - Inspection ..... page J3–98
   - Replacement ..... page J3–98
8. Center differential lock sensor switch
   - Inspection ..... page J3–98
   - Replacement ..... page J3–98

Downloaded from www.Manualslib.com manuals search engine

OUTLINE

OUTLINE OF CONSTRUCTION

- Full-Time 4-Wheel-Drive, incorporating an electronically controlled, lockable center differential, is standard on the 1990 323 4WD. With this system all driving conditions are easily contended with; from good road to bad roads and inclement weather.
- The transaxle and transfer unit were developed based on the transaxle of the 1989 323 4WD. The transaxle, center differential, and front differential are a single compact unit.
- The center differential employs a planetary carrier system, and functions to distribute the driving force to the front and rear differentials.
  Through the use of this center differential, tire scuffing common to 4-wheel-drive vehicles during tight cornering, is eliminated.
- The speedometer driven gear (for detection of vehicle speed) is installed in the transfer carrier and detects the speed of the rear wheels.
- Lubrication oil of the transaxle and transfer unit and the carrier is contained separately.
- A cable shift control is used in order to reduce weight and vibration.

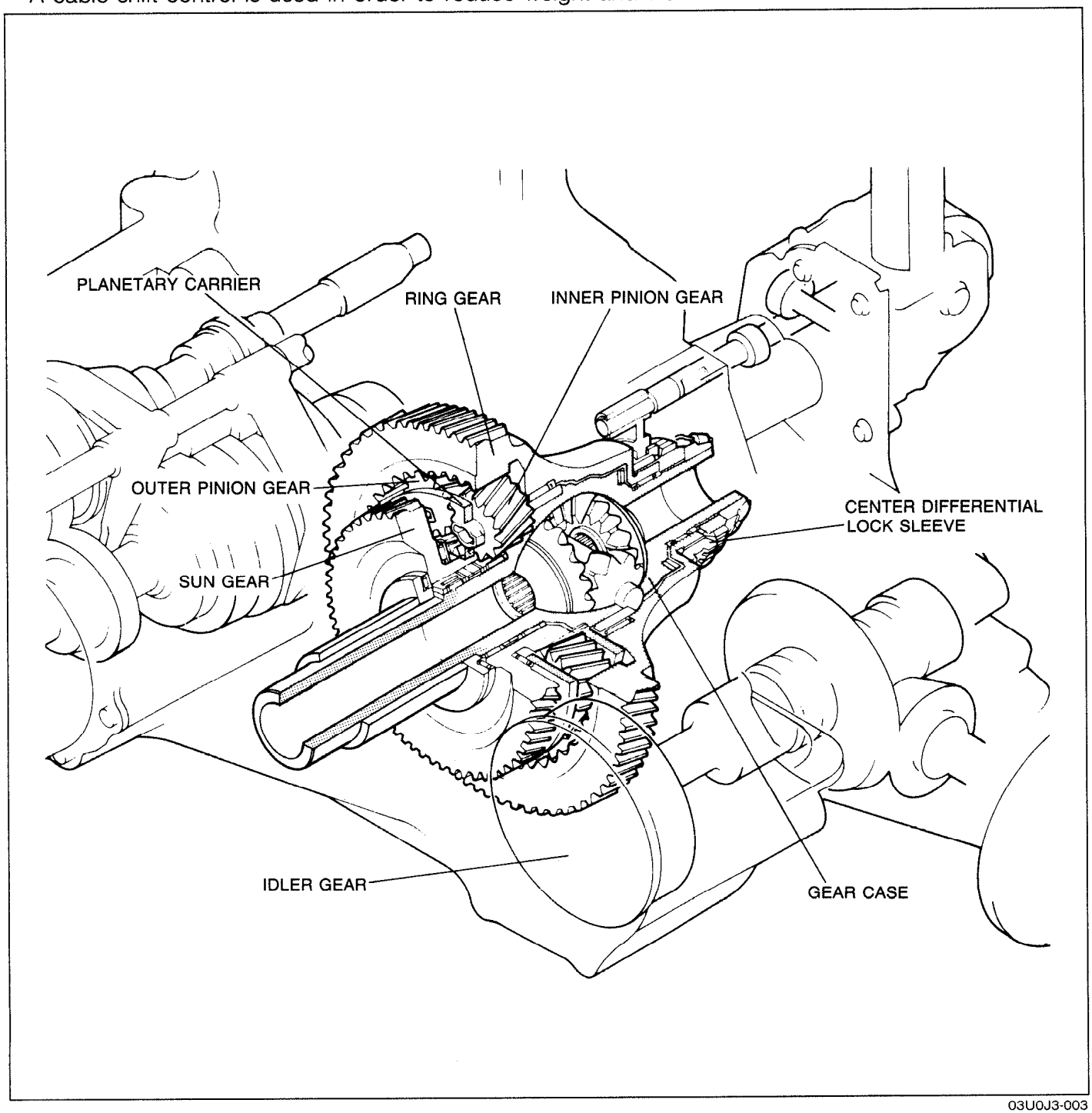

03U0J3-003

Downloaded from www.Manualslib.com manuals search engine

SPECIFICATIONS
TRANSAXLE AND TRANSFER UNIT

Item			Engine model: 1990 323 (4WD) BP SOHC	1989 323 (4WD) B6 DOHC
Transaxle control			Floor shift	
Synchromesh system		Forward	Synchromesh	
		Reverse	Selective sliding and synchromesh	Selective sliding
Gear ratio		1st	3.307	←
		2nd	1.833	←
		3rd	1.233	←
		4th	0.914	0.970
		5th	0.717	0.795
		Reverse	3.166	←
Final gear ratio			4.388	4.105
Speedometer gear ratio			1.045	←
Center differential	Type		Planetary carrier	←
	Number of ring gear teeth	Outer	79	78
		Inner	66	←
	Number of pinion gear teeth	Outer	14	←
		Inner	14	←
	Number of sun gear teeth	Pinion gear side	33	←
		Idler gear side	43	50
	Number of idler gear teeth		37	43
Oil		Type	ATF: DEXRON-II, M-III Above −18°C (0°F) API servie GL-4 SAE 75W-90	ATF: DEXRON-II API servie GL-4 SAE 80W-90 or 90
		Capacity	2.6 liters (2.7 US qt, 2.2 Imp qt)	3.6 liters (3.8 US qt, 3.2 Imp qt)

03U0J3-004

Transfer Carrier

Number of teeth	Ring gear	37
	Pinion gear	11
Oil	Type	API service GL-5 Above −18° (0°F) SAE 90 Below −18° (0°F): SAE 80W
	Capacity	0.5 liter (0.53 US qt, 0.44 Imp qt)

03U0J3-005

Downloaded from www.Manualslib.com manuals search engine

TRANSAXLE AND TRANSFER UNIT
Shift forks and shift rods

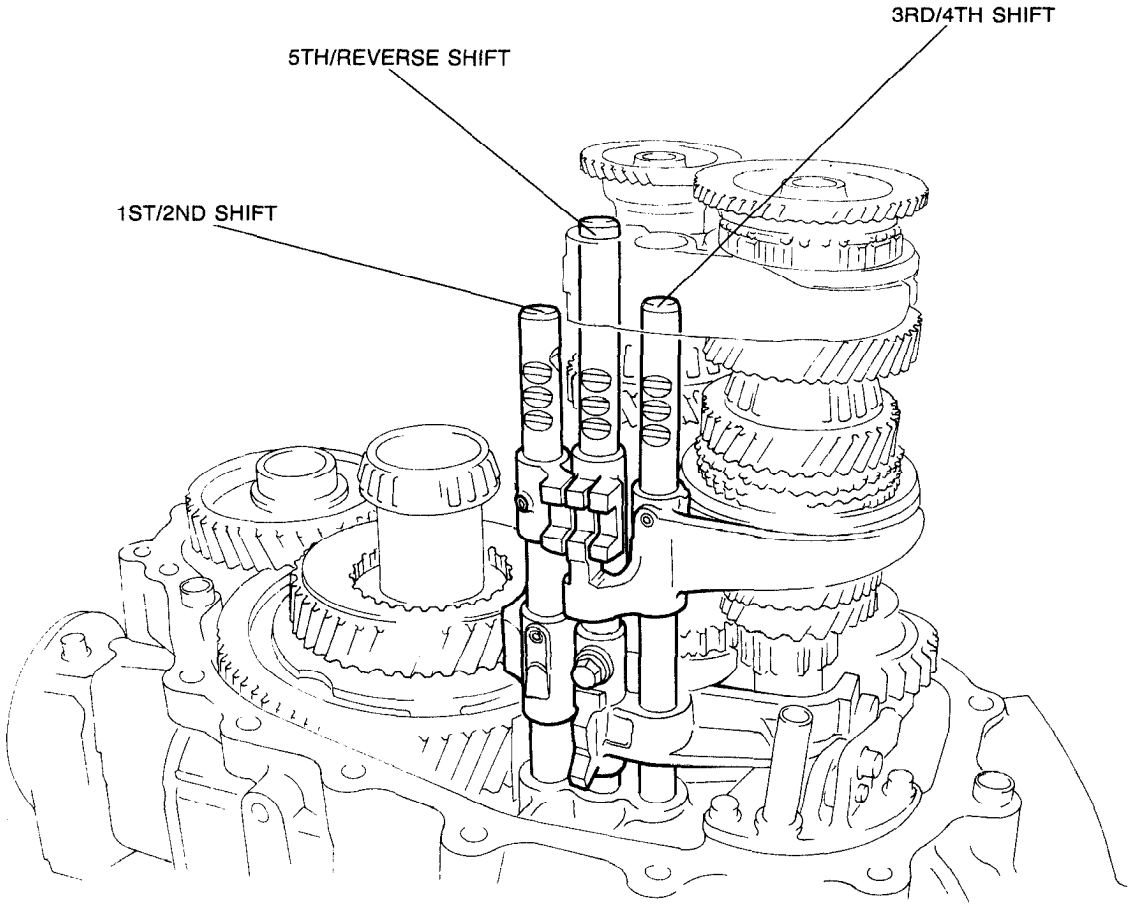

03U0J3-006

The shift mechanism is composed of three shift rods, shift forks, and shift rod ends. For the manual transaxle of the 1989 323 4WD, the 1-2 and 3-4 shift forks were moved by one shift rod, but, for the 1990 323 4WD, separate shift rods are used, thus reducing mechanical friction during shifting, and improving the shift feeling.

Downloaded from www.Manualslib.com manuals search engine

Interlock mechanism

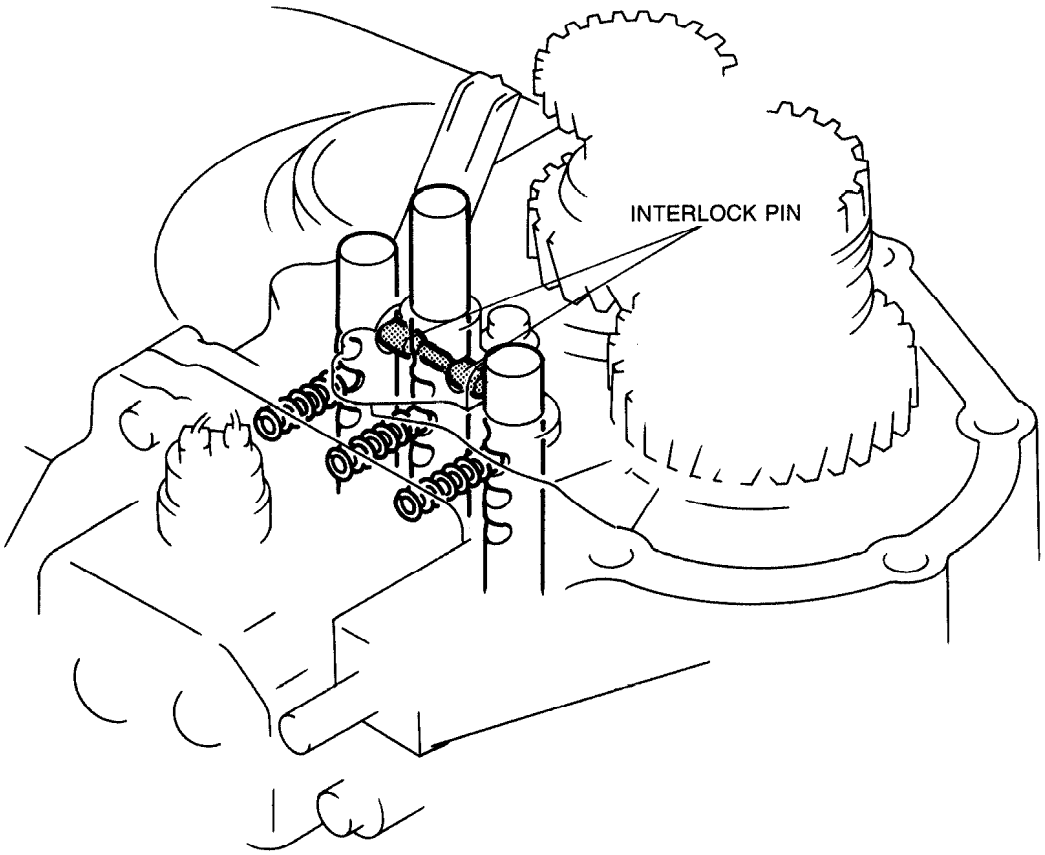

03U0J3-007

The interlock mechanism is the pin type. For the manual transaxle of the 1989 323 4WD, the one shift rod was held by the other shift rod's interlock sleeve, but, for the manual transaxle of the 1990 323 4WD, when one shift rod is caused to move, the interlock pins are pushed out to hold the other shift rods.

Downloaded from www.Manualslib.com manuals search engine

Idler gear shaft

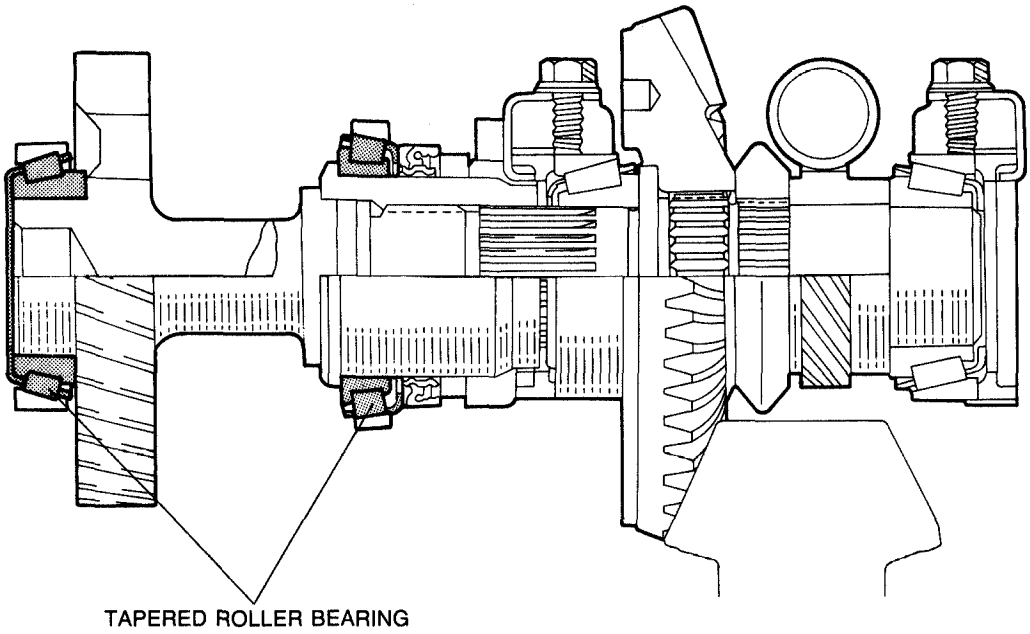

03U0J3-008

For improved transaxle reliability, a tapered roller bearing is newly fitted at the ring gear end of the idler gear shaft for better support; in addition, the previously fitted bearing is changed from a ball bearing to a tapered roller bearing.

Downloaded from www.Manualslib.com manuals search engine

STRUCTURAL VIEW

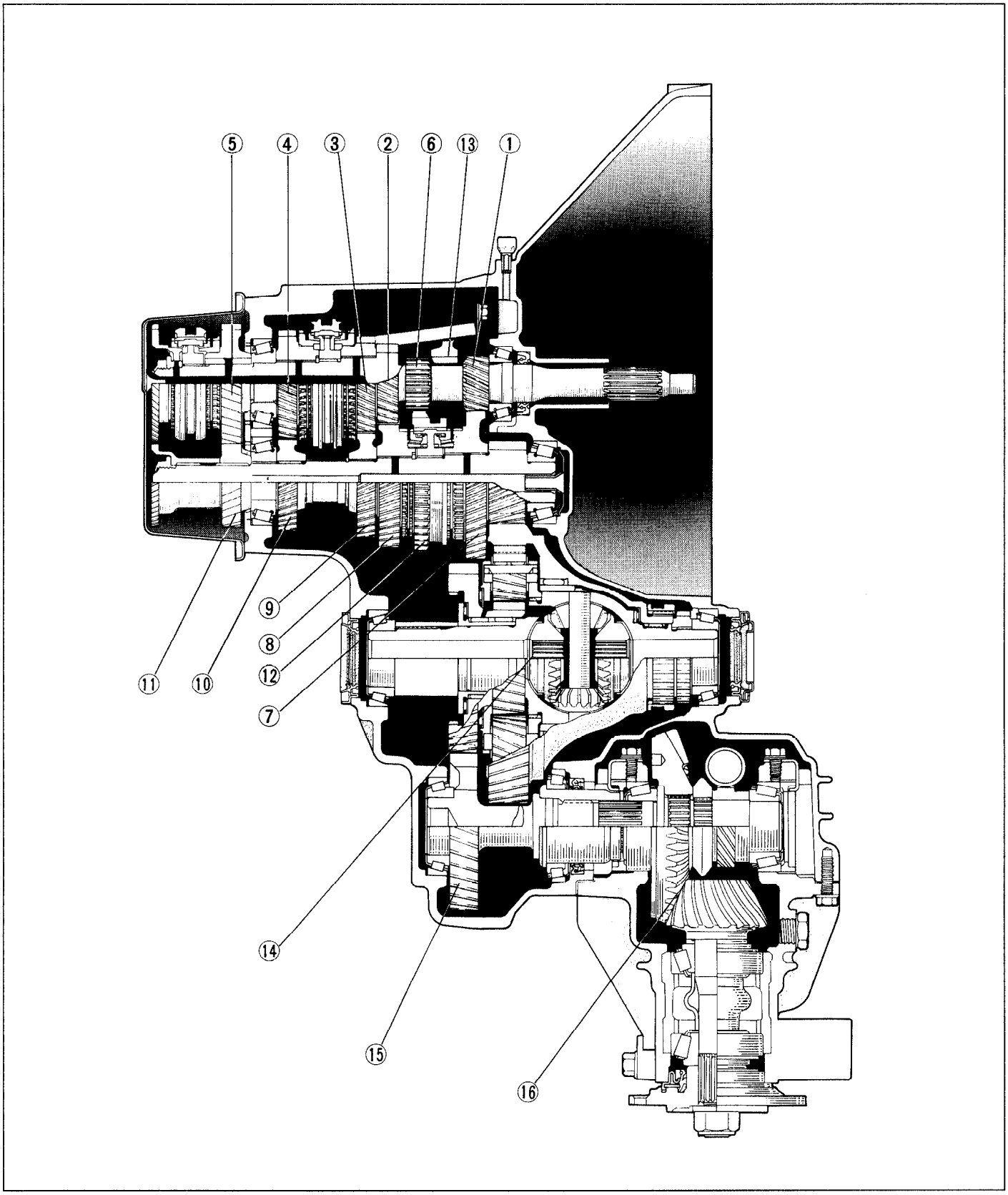

03U0J3-010

1. Primary 1st gear
2. Primary 2nd gear
3. Primary 3rd gear
4. Primary 4th gear
5. Primary 5th gear
6. Primary reverse gear
7. Secondary 1st gear
8. Secondary 2nd gear
9. Secondary 3rd gear
10. Secondary 4th gear
11. Secondary 5th gear
12. Secondary reverse gear
13. Reverse idler gear
14. Front and center differential assembly
15. Idler gear assembly
16. Transfer carrier assembly

Downloaded from www.Manualslib.com manuals search engine

POWERFLOW

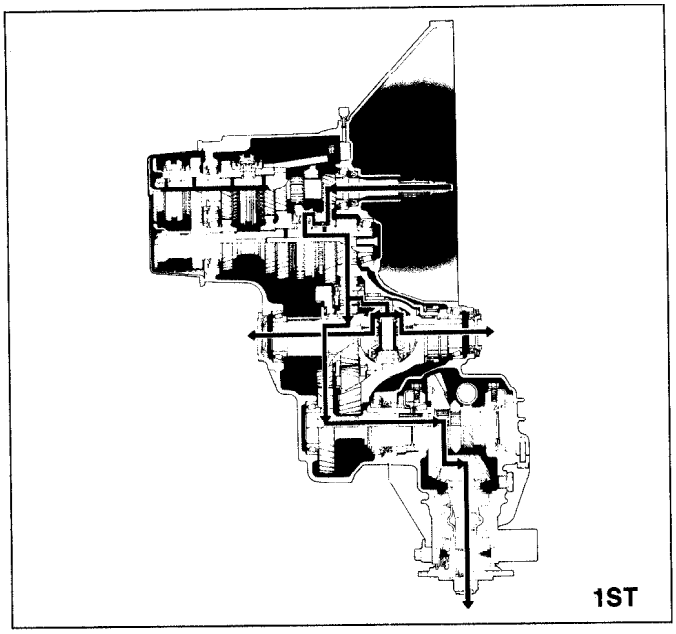

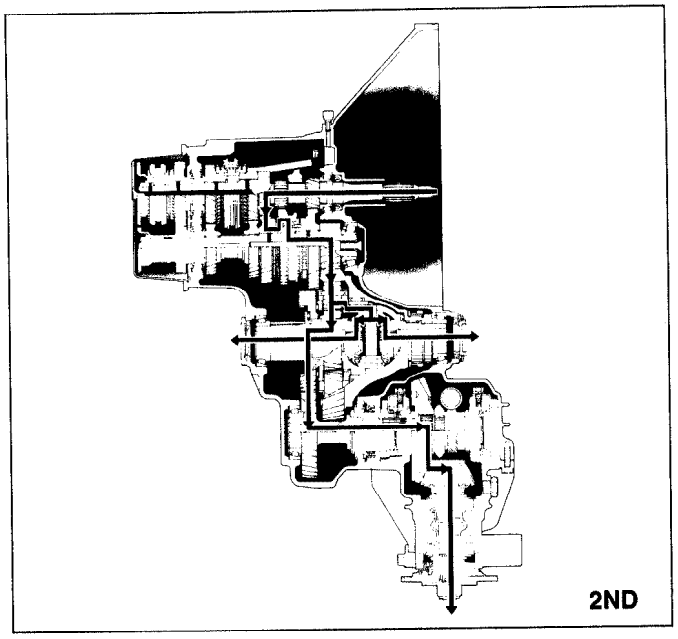

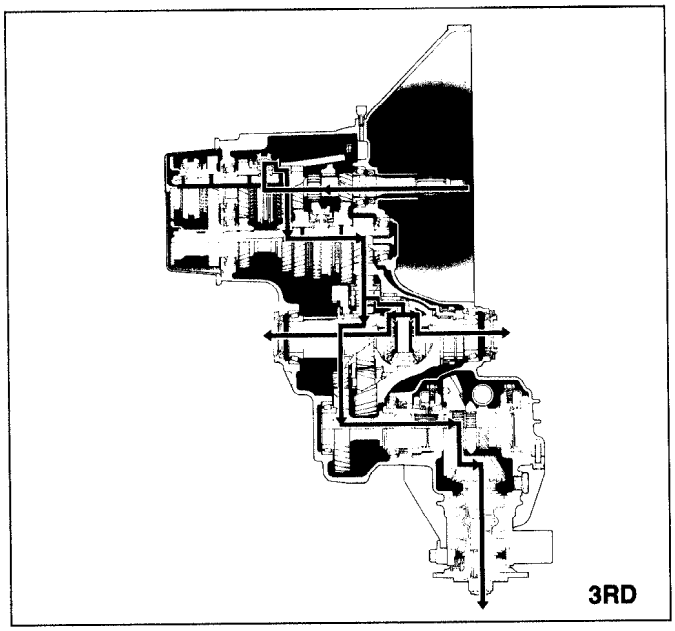

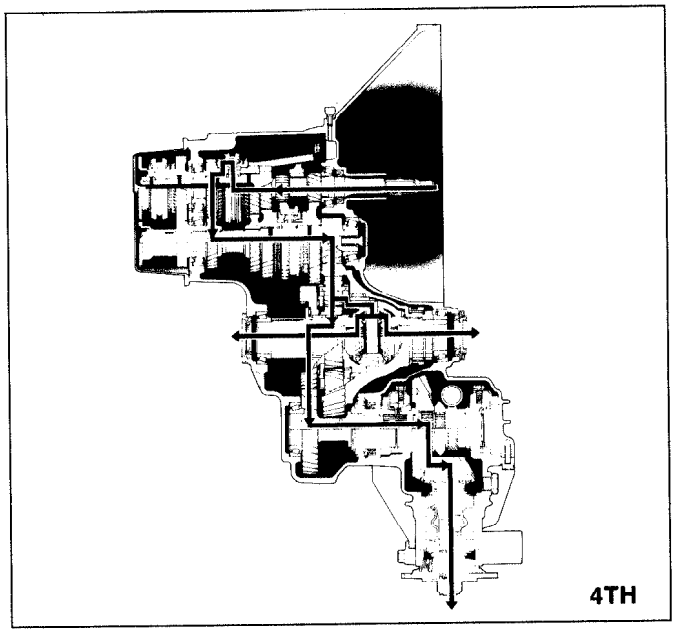

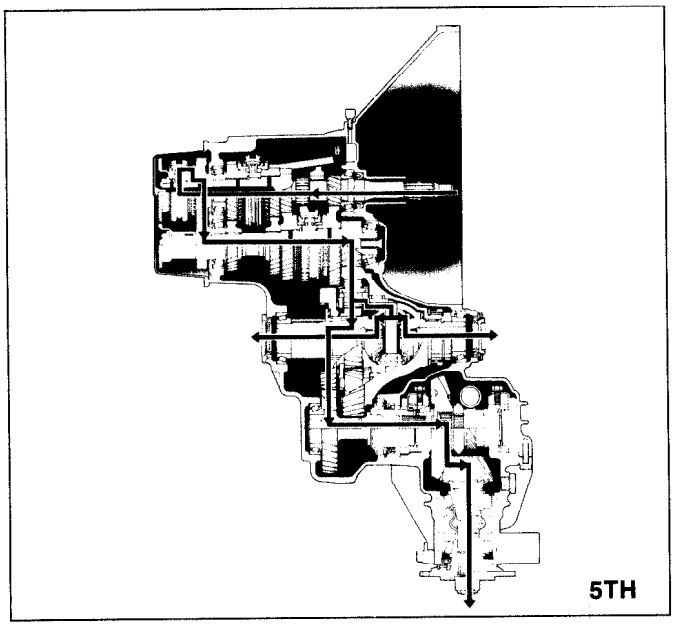

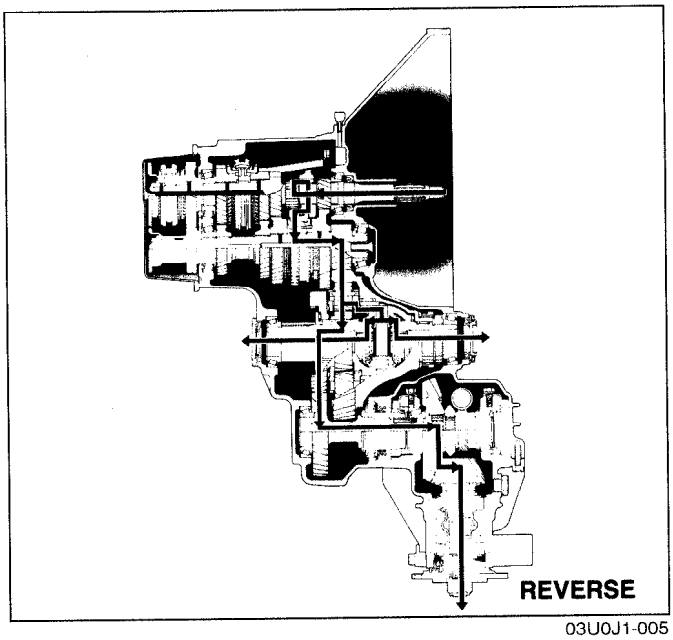

03U0J1-005

Downloaded from www.Manualslib.com manuals search engine

TROUBLESHOOTING GUIDE

Problem	Possible cause	Action	Page
Shift lever won't shift smoothly or is hard to shift	Worn change control cable	Replace	J3–91
Difficult to shift	Worn change rod	Replace	J3–91
	No grease in transaxle control	Lubricate	J3–91
	Insufficient oil	Add oil	J3–11
	Deterioration of oil quality	Replace with oil of specified quality	J3–11
	Wear or play of shift fork or shift rod	Replace	J3–20
	Worn synchronizer ring	Replace	J3–33, 35
	Worn synchronizer cone of gear	Replace	J3–33, 35
	Bad contact of synchronizer ring and cone of gear	Replace	J3–33, 35
	Excessive longitudinal play of gears	Replace	J3–33, 35
	Worn bearing	Replace	J3–33, 35
	Worn synchronizer key spring	Replace	J3–33, 35
	Excessive primary shaft gear bearing preload	Adjust	J3–73
	Improperly adjusted change guide plate	Adjust	J3–31
Won't stay in gear	Worn change control cable	Replace	J3–91
	Weak shift lever ball spring	Replace	J3–91
	Worn shift fork	Replace	J3–20
	Worn clutch hub	Replace	J3–33, 35
	Worn clutch hub sleeve	Replace	J3–33, 35
	Worn gear sliding part of both shaft gears	Replace	J3–33, 35
	Worn gear sliding part of each gear	Replace	J3–33, 35
	Worn steel sliding groove of control end	Replace	J3–20
	Weak spring pressing against steel ball	Replace	J3–20
	Excessive thrust clearance	Replace	J3–33, 35
	Worn bearing	Replace	J3–33, 35
	Improperly installed or loose engine mount	Tighten	J3–86
Abnormal noise	Insufficient oil	Add oil	J3–11
	Deterioration of oil quality	Replace	J3–11
	Worn bearing	Adjust or replace	J3–33, 35
	Worn sliding surfaces of gears or shafts	Replace	J3–33, 35
	Excessive gear backlash	Replace	J3–33, 35
	Damaged gear teeth	Replace with oil of specified quality	J3–33, 35
	Foreign material in gears	Replace	J3–33, 35
	Damaged differential gear or excessive backlash	Adjust or replace	J3–58

03U0J3-011

Downloaded from www.Manualslib.com manuals search engine

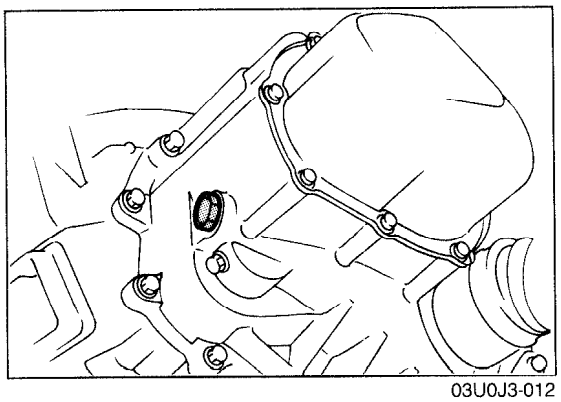
03U0J3-012

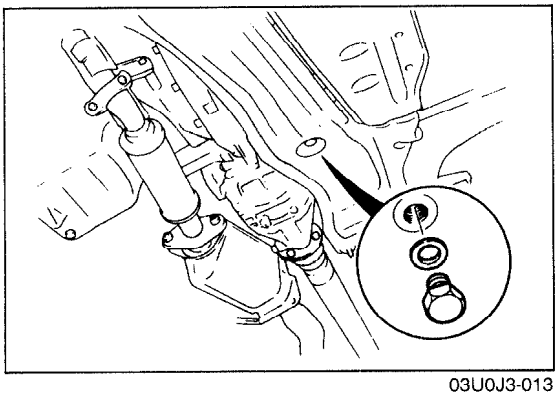
03U0J3-013

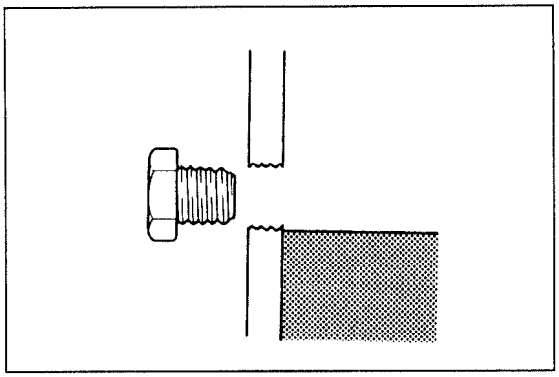
03U0J3-014

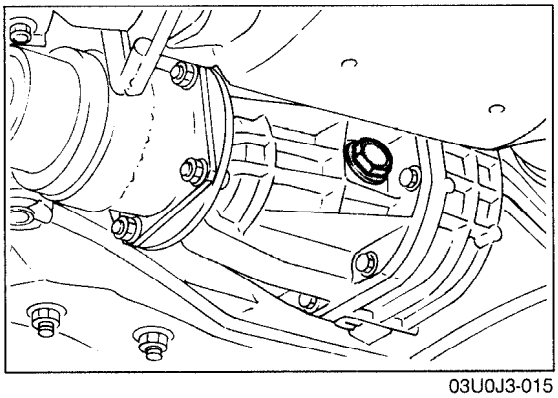
03U0J3-015

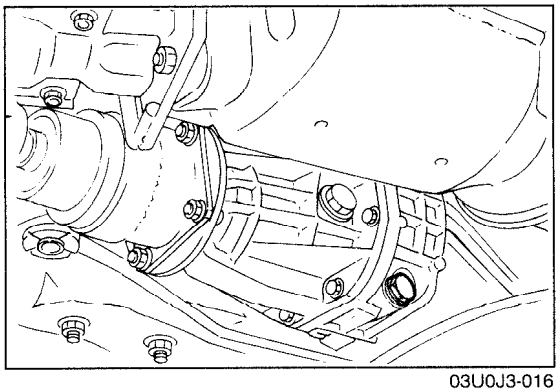
03U0J3-016

TRANSAXLE OIL

INSPECTION

Note
- **Park the vehicle on level ground.**

1. Remove the check plug.
2. Verify that the oil is at the bottom of the plug port. If it is low, add the specified oil from plug port.
3. Install the check plug.

Tightening torque:
39—58 N·m (4.0—6.0 m-kg, 28—43 ft-lb)

REPLACEMENT

1. Remove the drain plug and washer. Drain the oil into a suitable container.
2. Install a new washer and the drain plug.

Tightening torque:
39—58 N·m (4.0—6.0 m-kg, 28—43 ft-lb)

3. Add the necessary amount of the specified oil through the check plug port.

Specified oil
All-season : ATF (DEXRON-II, M-III)
Above −18°C (0°F): SAE 75W-90
Grade : API service GL4

Capacity: 2.6 liters (2.7 US qt, 2.2 Imp qt)

4. Verify the oil level.
5. Install the check port plug.

Tightening torque:
39—58 N·m (4.0—6.0 m-kg, 28—43 ft-lb)

TRANSFER CARRIER OIL

INSPECTION

Note
- **Park the vehicle on level ground.**

1. Remove the check plug.
2. Verify that the oil is at the bottom of the plug port. If it is low, add the specified oil from plug port.
3. Install check plug.

Tightening torque:
39—58 N·m (4.0—6.0 m-kg, 28—43 ft-lb)

REPLACEMENT

1. Remove the drain plug. Drain the oil into a suitable container.
2. Install a new washer and the drain plug.

Tightening torque:
39—58 N·m (4.0—6.0 m-kg, 28—43 ft-lb)

Downloaded from www.Manualslib.com manuals search engine

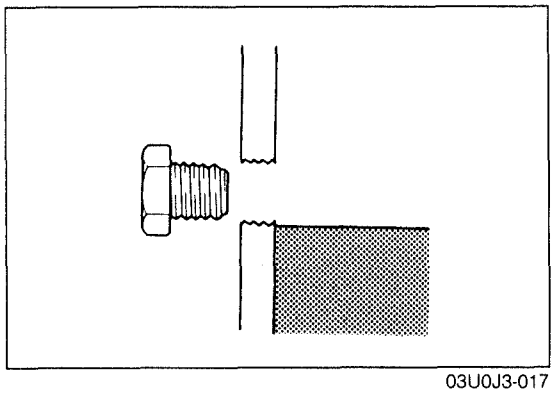

03U0J3-017

3. Add the necessary amount of the specified oil through the check plug port.

Grade : API servies Gl-5
Specified oil: Above –18°C (0°F) SAE 90
Below –18°C (0°F) SAE 80W
Capacity : 0.5 liter (0.53 US qt, 0.44 Imp qt)

4. Install the check plug.

Tightening torque:
39—58 N·m (4.0—6.0 m-kg, 28—43 in-lb)

Downloaded from www.Manualslib.com manuals search engine

TRANSAXLE AND TRANSFER UNIT

PREPARATION
SST

49 G017 5A0 Support, engine	For support of engine	49 0118 850C Puller, ball joint	For removal of tie-rod end
49 0107 680A Stand, engine	For disassembly and assembly of transaxle	49 G019 0A0 Transaxle, hanger	For disassembly and assembly of transaxle
49 G030 440 Holder, primary shaft	For holding primary shaft	49 G030 795 Installer, oil seal	For installation of oil seal
49 0636 145 Puller, fan pulley boss	For removal of bearing inner race	49 G030 370 Plate, removing	For removal of secondary 3rd gear and 2nd gear
49 G017 1A0 Remover set, bearing	For removal of bearing	49 F401 366A Plate (Part of 49 G017 1A0)	For removal of bearing inner race
49 B092 373 Attachment G (Part of 49 G017 1A0)	For removal of bearing inner race	49 B092 374 Attachment H (Part of 49 G017 1A0)	For removal of bearing inner race
49 0839 425C Puller set, bearing	For removal of bearing inner race	49 F401 330B Installer set, bearing	For installation of bearing
49 F401 331 Body (Part of 49 F401 330B)	For installation of bearing inner race	49 F401 335A Attachment A (Part of 49 F401 330B)	For installation of bearing inner race

Downloaded from www.Manualslib.com manuals search engine

49 F401 337A Attachment B (Part of 49 F401 330B)	For installation of bearing inner race	49 G030 380C Selector set, shim	For adjustment of bearing preload
49 G030 381 Selector for ϕ68 (Part of 49 G030 380C)	For adjustment of bearing preload	49 G030 382A Selector ϕ58 (Part of 49 G030 380C)	For adjustment of bearing preload
49 F401 382A Selector ϕ52 (Part of 49 G030 380C)	For adjustment of bearing preload	49 F401 384 Collar (Part of 49 G030 380C)	For adjustment of bearing preload
49 G019 021 Set, bolt (Part of 49 G030 380C)	For adjustment of bearing preload	49 B027 002 Adapter, preload	For adjustment of bearing preload
49 F401 385 Bar (Part of 49 G030 380C)	For adjustment of bearing preload	49 U027 003 Installer, oil seal	For installation of oil seal
49 G017 202 Adapter, preload	For adjustment of bearing preload	49 B027 001 Holder, diff. side gear	For holding side gear
49 F027 009 Attachment 68 & 77 (Part of 49 F027 0A1)	For installation of bearing inner race	49 G017 1A0 Remover set, bearing	For removal of bearing
49 F401 366A Plate (Part of 49 G017 1A0)	For removal of bearing	49 0710 520 Puller, bearing	For removal of bearing

Downloaded from www.Manualslib.com manuals search engine

49 F027 0A1 Installer set, bearing	For installation of bearing	49 M005 561 Hanger, differential carrier	For disassembly and assembly of differentia
49 S120 710 Holder, coupling flange	For removal and installation of companion flange	49 B027 003 Attachment M	For removal of bearing
49 F027 0A0 Gauge set, pinion height adjustment	For adjustment of pinion height	49 0727 570 Gauge body, pinion height (Part of 49 F027 0A0)	For adjustment of pinion height
49 F401 337A Attachment C (Part of 49 D017 2A1)	For installation of bearing inner race (side bearing)	49 F027 003 Handle (Part of 49 F027 0A1)	For installation of bearing
49 F027 005 Attachment ϕ62 (Part of 49 F027 0A1)	For installation of bearing	49 0259 720 Wrench, differential side bearing adjusting nut	For adjustment of drive pinion and ring gear backlash
49 W023 785 Boot, installer	For installation of oil seal	49 G030 338 Attachment E	For installation of bearing
49 H028 2A0 Rubber bush replacer	For installation of bearing	49 H028 202 Block L (Part of 49 H028 2A0),	For installation of bearing

03U0J3-018

Downloaded from www.Manualslib.com manuals search engine

REMOVAL

1. Disconnect the negative battery cable.
2. Raise the vehicle and support it with safety stands.
3. Drain the transaxle oil and transfer carrier oil into a suitable container.
4. Remove in the order shown in the figure, referring to **Removal Note**.

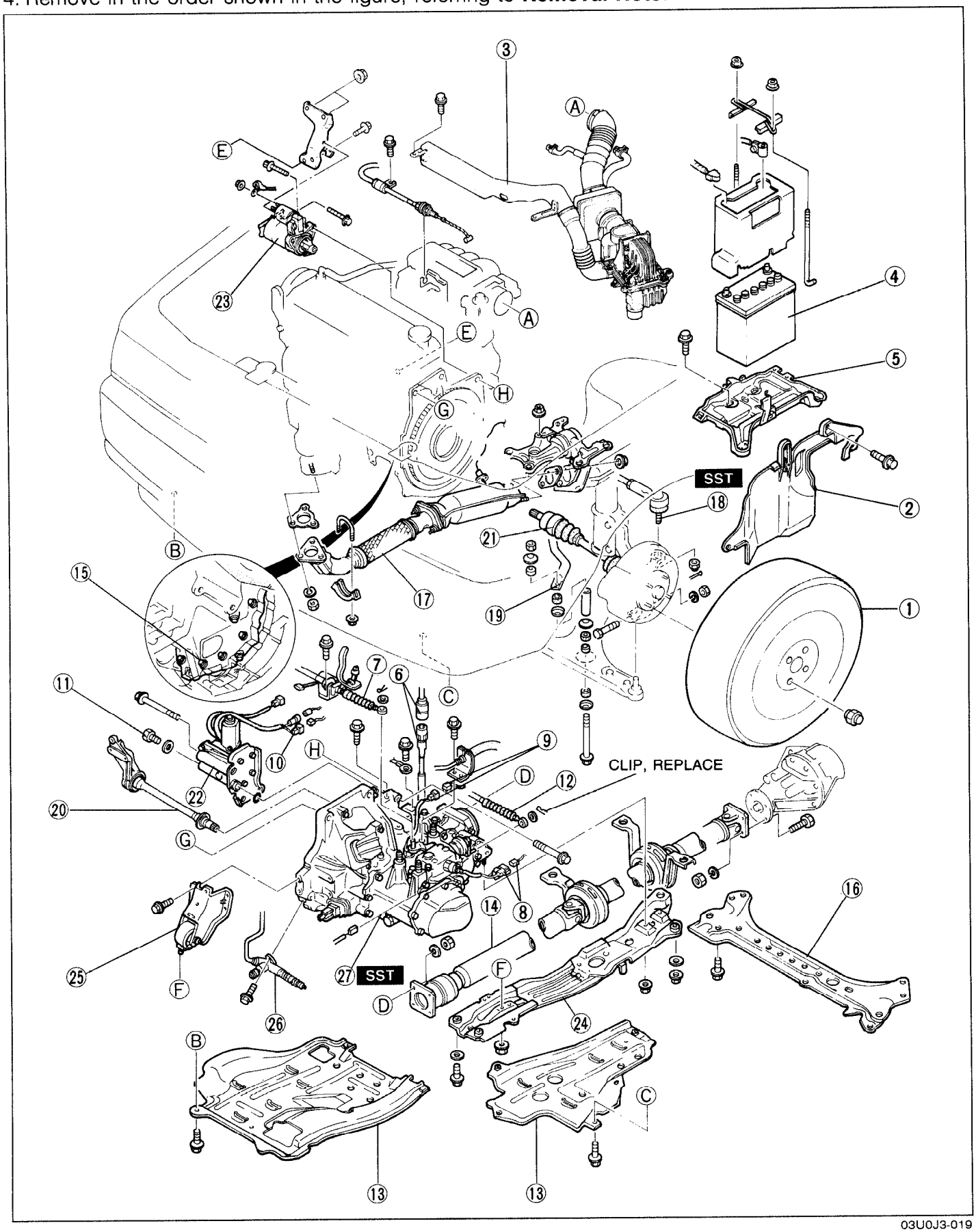

03U0J3-019

Downloaded from www.Manualslib.com manuals search engine

1. Wheel and tire
2. Splash shield
3. Air hose and air cleaner assembly
4. Battery
5. Battery carrier
6. Speedometer cable
7. Shift cable
8. Neutral switch connector
9. Back-up light switch connector
10. Differential lock motor connector
11. Bolt
12. Control cable
13. Undercover
14. Propeller shaft
    Removal Note ..... page J3–17
15. Integrated stiffener
16. Crossmember
17. Exhaust pipe
18. Tie-rod end
    Removal Note ..... page J3–17
19. Stabilizer
20. Joint shaft
21. Driveshaft
    Removal Note ..... page J3–17
22. Center differential lock motor
    Removal Note ..... page J3–18
23. Starter
24. Engine mount member
    Removal Note ..... page J3–19
25. Engine mount No.2
26. Clutch release cylinder and clutch pipe
    Removal Note ..... page J3–19
27. Transaxle and transfer carrier
    Removal Note ..... page J3–19

03U0J3-020

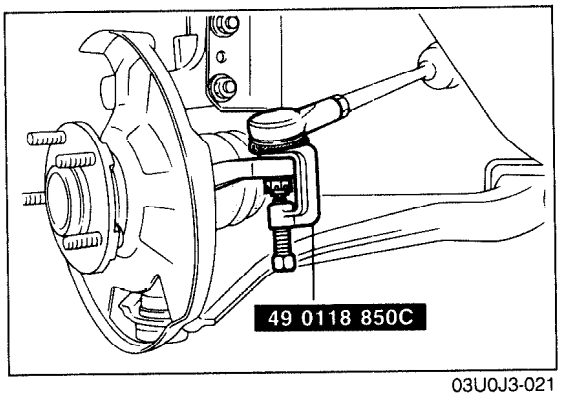

03U0J3-021

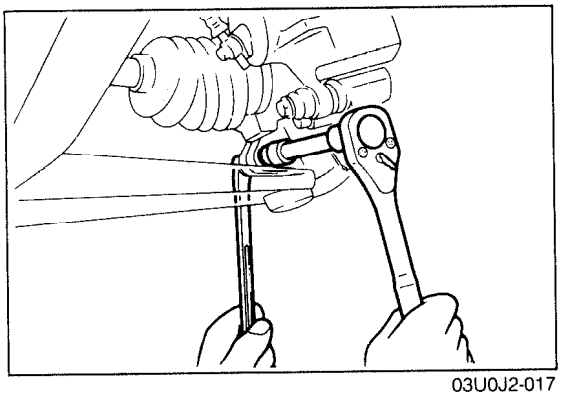

03U0J2-017

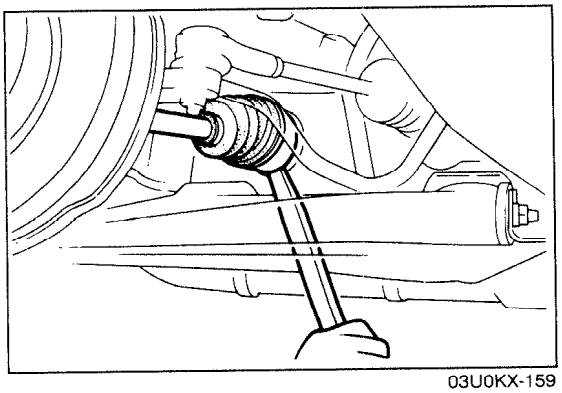

03U0KX-159

Removal note
Propeller shaft

Caution
- **Do not mark with a punch.**

1. Mark the companion flange and the front yoke.
2. Mark the companion flange and the rear yoke.
3. Remove the propeller shaft.

Tie-rod end

1. Remove the cotter pin.

Caution
- **Do not damage the dust boot.**

2. Loosen the nut and disconnect the tie-rod end with the **SST**.

Driveshaft

Caution
- **Do not damage the ball joint dust boot.**

1. Remove the clinch bolts from the lower arm ball joints.
2. Pull the lower arms downward to separate them from the knuckles.

Downloaded from www.Manualslib.com manuals search engine

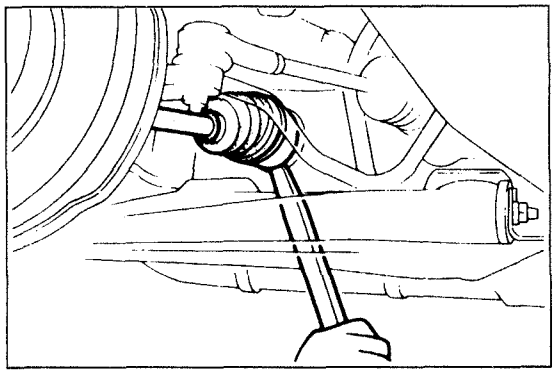

03U0KX-160

Caution
- **Do not damage the oil seal.**

3. Separate the left driveshaft from the transaxle by prying with a bar inserted between the shaft and the transaxle case.

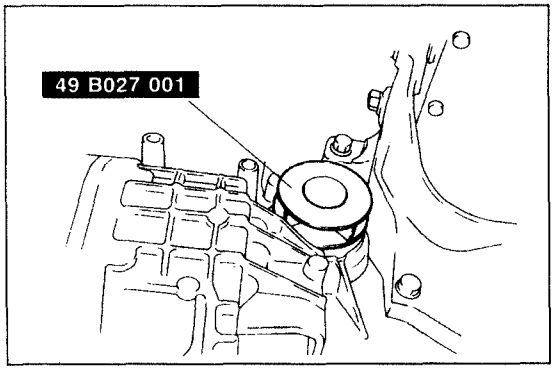

03U0KX-161

Caution
- **If the SST is not installed, the differential side gears may become misaligned.**

4. Slide the **SST** into the differential side gear.

Center differential lock motor

1. Remove the set bolt.

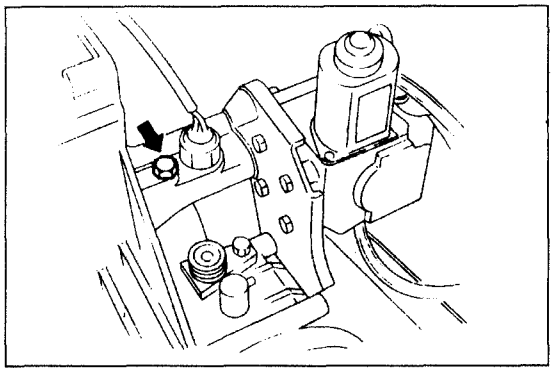

03U0J3-022

2. Remove the center differential lock sensor switch.
3. Remove the plug, and turn the rod with a screwdriver.

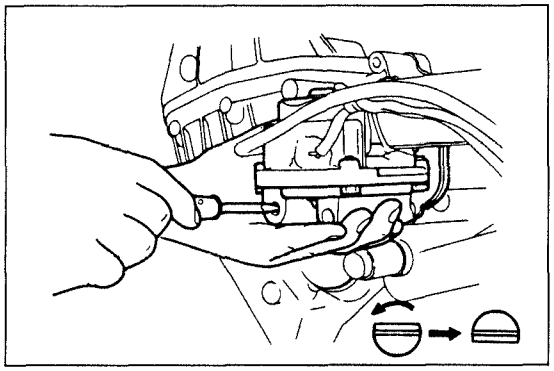

03U0J3-023

4. Remove the center differential lock motor.
5. Remove the O-ring from the center differential lock motor.

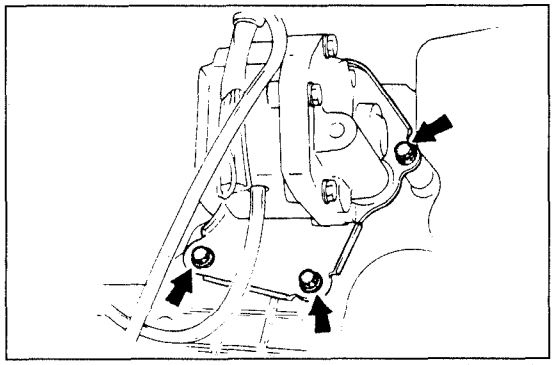

03U0J3-024

Downloaded from www.Manualslib.com manuals search engine

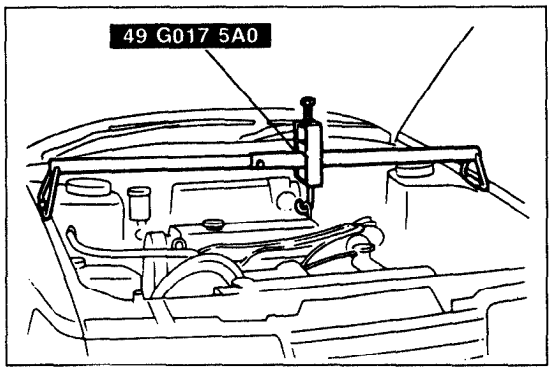

03U0J3-025

Engine mounting member

1. Suspend the engine with the **SST** before removing the engine mounting member.

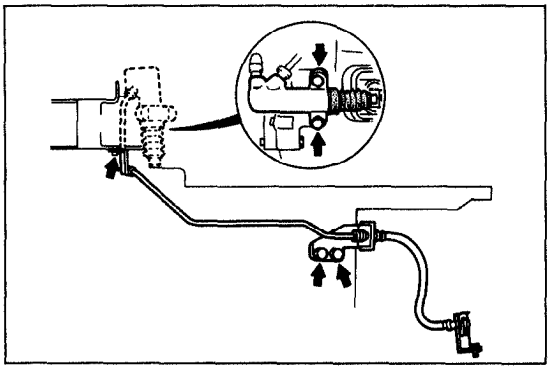

03U0J2-016

Clutch release cylinder

Caution
- **Do not damage the clutch pipe.**

1. Remove the bolts shown.
2. Lay aside the clutch release cylinder and the clutch pipe.

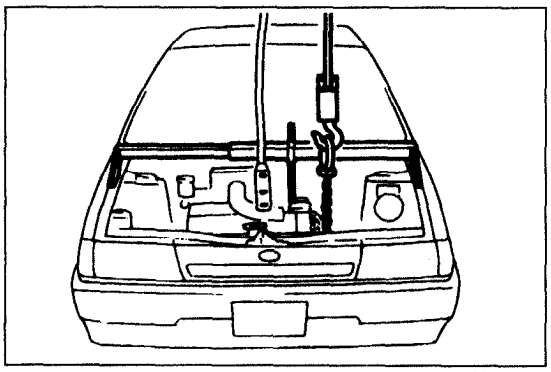

03U0J3-026

Transaxle and transfer unit

1. Use an engine hoist, and remove the transaxle and transfer unit.

Downloaded from www.Manualslib.com manuals search engine

DISASSEMBLY

Precaution

1. Clean the transaxle exterior thoroughly with a steam cleaner and/or cleaning solvent before disassembly.
2. Clean the removed parts (except sealed bearings) and all sealing surfaces with cleaning solvent, and dry with compressed air. Clean out all holes and passages with a compressed air, and check that there are no obstructions.
3. Wear eye protection when using compressed air to clean components.

5th/Reverse Gear and Housing Parts

1. Measure the thrust clearance between 5th gear and the transaxle case, referring to **Preinspection**.
2. Disassmble in the order shown in the figure, referring to **Disassembly Note**.
3. Inspect all parts and repair or replace as necessary.

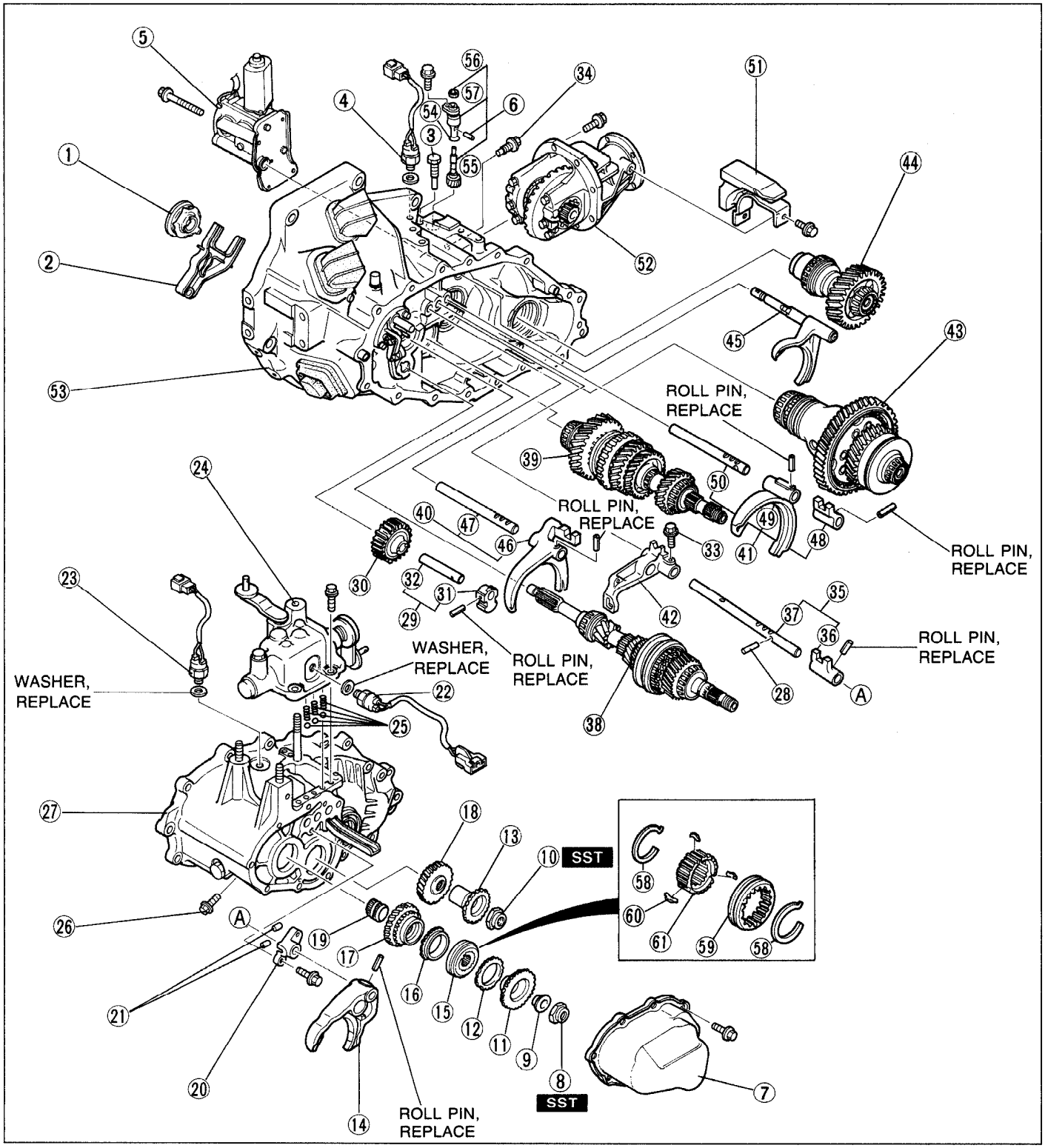

03U0J3-027

Downloaded from www.Manualslib.com manuals search engine

1. Clutch release bearing
   Disassembly Note ..... page J3–22
2. Clutch release fork
   Disassembly Note ..... page J3–22
3. Differential lock set bolt
4. Differential lock switch
5. Differential lock motor
   Disassembly Note ..... page J3–22
6. Speedometer assembly
7. Rear cover
8. Locknut
9. Spacer
10. Locknut
11. Primary reverse synchronizer gear
    Inspect gear teeth for damage, wear, and cracks
12. Synchronizer ring
    Inspection ..... page J3–45
13. Secondary reverse synchronizer gear
    Inspect gear teeth for damage, wear, and cracks
14. Shift fork
    Disassembly Note ..... page J3–23
    Inspection ..... page J3–46
15. Clutch hub assembly
    Disassembly Note ..... page J3–23
    Inspection ..... page J3–45
16. Synchronizer ring
    Inspection ..... page J3–45
17. Primary 5th gear
    Inspection ..... page J3–45
18. Secondary 5th gear
    Inspect gear teeth for damage, wear, and cracks
19. Gear sleeve
    Inspection ..... page J3–45
20. Interlock plate
21. Interlock pins
22. Neutral switch
23. Back-up light switch
24. Top cover assembly
    Disassembly Note ..... page J3–23
    Disassembly ..... page J3–31
    Assembly ..... page J3–62
25. Steel balls and springs
26. Lock bolt
27. Transaxle case assembly
    Disassembly Note ..... page J3–23
    Disassembly ..... page J3–28
    Assembly ..... page J3–70
28. Interlock pin
29. Reverse idler gear shaft assembly
30. Reverse idler gear
    Inspection ..... page J3–45
31. Reverse idler gear support
32. Reverse idler gear shaft
33. Bolt
34. Steel ball, spring, and bolt
35. Shift rod assembly
36. Shift rod end
37. Shift rod
38. Primary shaft assembly
    Disassembly Note ..... page J3–24
    Disassembly ..... page J3–33
    Assembly ..... page J3–64
39. Secondary shaft assembly
    Disassembly Note ..... page J3–35
    Disassembly ..... page J3–24
    Assembly ..... page J3–67
40. Shift fork assembly (3rd/4th)
41. Shift fork assembly (1st/2nd)
42. Shift gate
43. Front and center differential assembly
    Disassembly Note ..... page J3–24
    Disassembly ..... page J3–38
    Assembly ..... page J3–58
44. Idler gear assembly
    Disassembly ..... page J3–40
    Assembly ..... page J3–56
45. Center differential lock shift fork
    Disassembly ..... page J3–38
    Assembly ..... page J3–58
46. Shift fork (3rd/4th)
    Inspection ..... page J3–45
47. Shift rod (3rd/4th)
48. Shift rod end
49. Shift fork (1st/2nd)
    Inspection ..... page J3–45
50. Shift rod (1st/2nd)
51. Dynamic damper assembly
52. Transfer carrier assembly
    Disassembly ..... page J3–42
    Assembly ..... page J3–50
53. Clutch housing assembly
    Disassembly ..... page J3–28
    Assembly ..... page J3–70
54. O-ring
55. Speedometer driven gear
56. Oil seal
    Disassembly Note ..... page J3–25
    On-vehicle ..... page J3–25
57. Speedometer sleeve
58. Synchronizer key spring
59. Clutch hub sleeve
    Inspection ..... page J3–45
60. Synchronizer key
61. Clutch hub

03U0J3-028

Downloaded from www.Manualslib.com manuals search engine

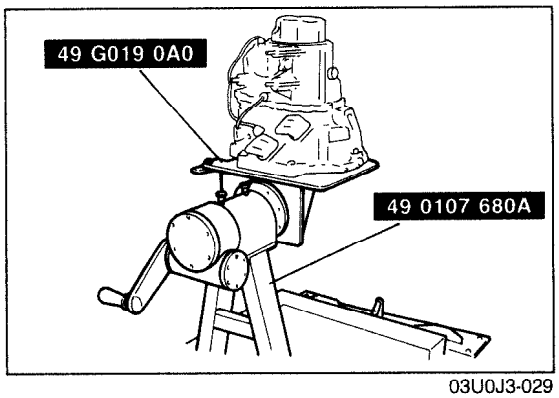

03U0J3-029

Preinspection

5th gear thrust clearance

1. Mount the transaxle and transfer carrier on the **SST**.
2. Remove the rear cover.

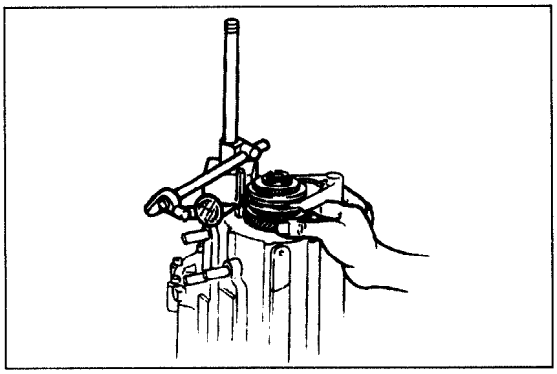
03U0J3-030

3. Measure the 5th gear thrust clearance with a dial indicator.

   Clearance: 0.1—0.22mm (0.0039—0.0087 in)
   Maximum : 0.27mm (0.0106 in)

4. If the clearance exceeds the maximum, check the contact surfaces of 5th gear and the clutch hub. Replace worn or damaged parts.

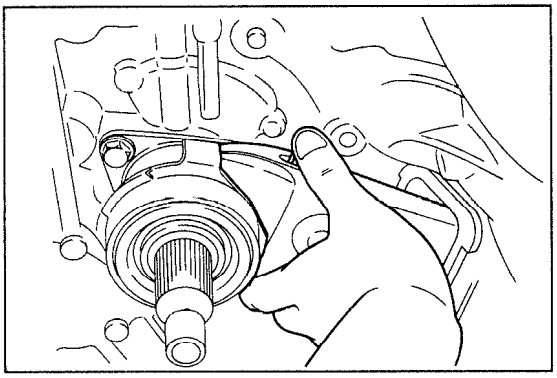
03U0J3-031

Disassembly note

Clutch release bearing, clutch release fork

1. Slide the clutch release fork to the boot.
2. Remove the clutch release bearing.
3. Remove the clutch release fork.

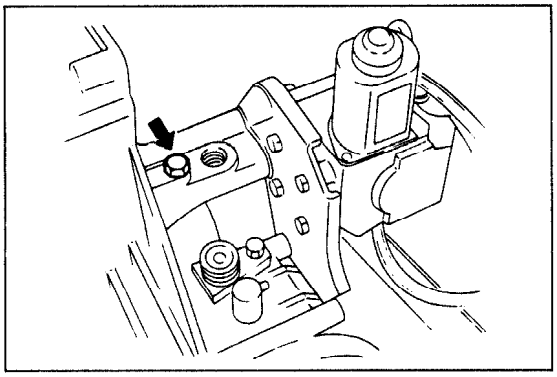
03U0J3-032

Center differential lock motor

1. Remove the set bolt.

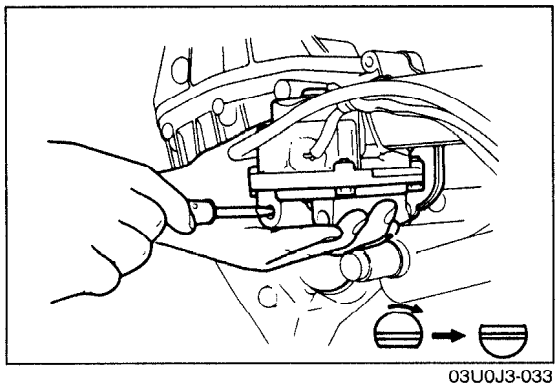
03U0J3-033

2. Remove the plug and turn the differential lock shift rod 180° clockwise with screwdriver.
3. Remove the differential lock assembly.

Downloaded from www.Manualslib.com manuals search engine

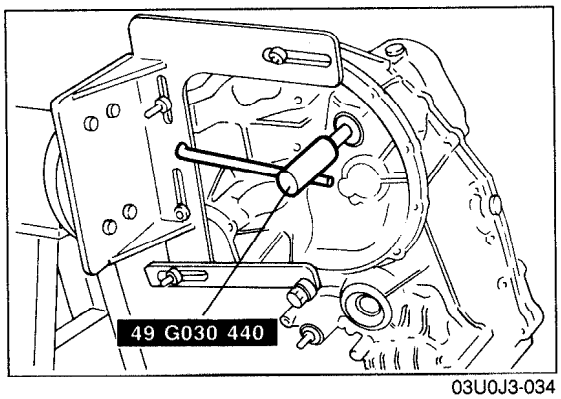

03U0J3-034

Shift fork, clutch hub assembly

1. Lock the primary shaft with the **SST**.
2. Shift to 1st or 2nd gear to lock the rotation of the primary shaft.

Caution

- **Do not reuse the removed locknut.**

3. Uncrimp the tabs of the locknuts.
4. Remove the locknuts from the primary and secondary shafts.

5. Remove the shift fork together with the clutch hub assembly.

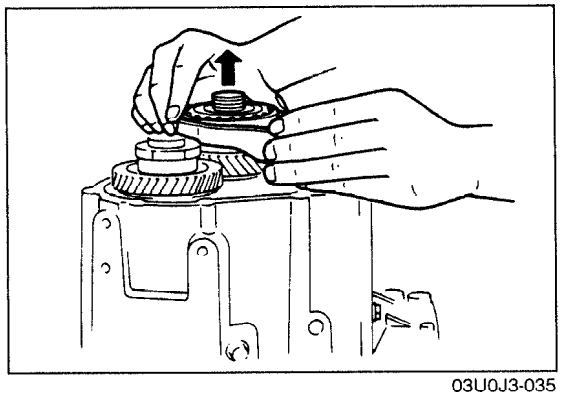
03U0J3-035

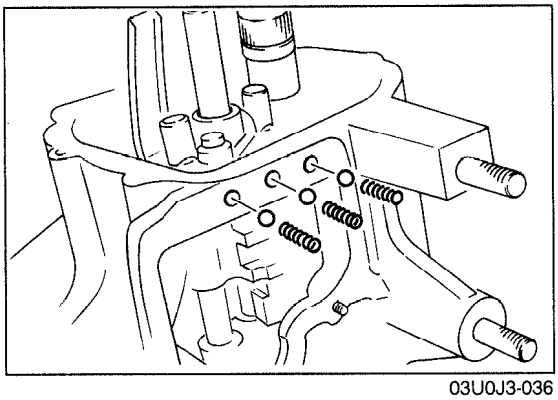
03U0J3-036

Top cover assembly

1. Remove the top cover assembly.
2. Remove the springs.
3. Remove the steel balls with a magnet.

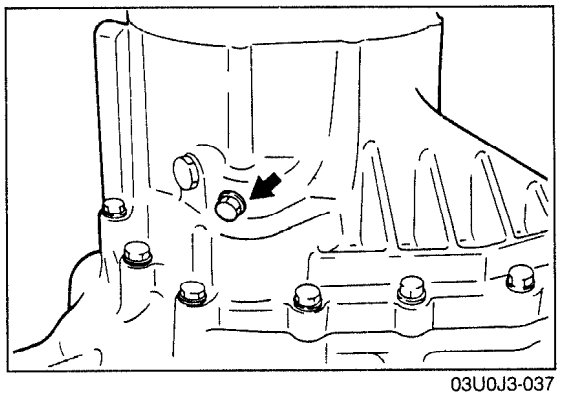
03U0J3-037

Transaxle case assembly

1. Remove the bolt.

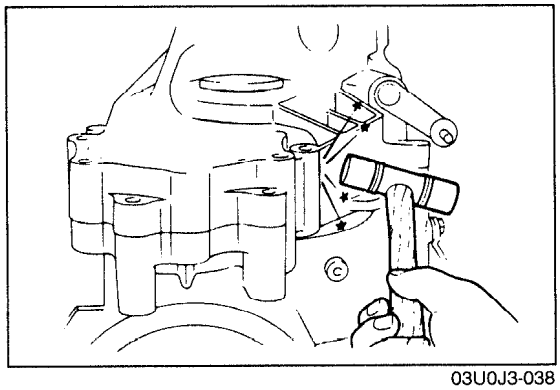
03U0J3-038

2. Remove the bolts and transaxle case by tapping lightly with a plastic hammer.
3. Remove the magnet.

Downloaded from www.Manualslib.com manuals search engine

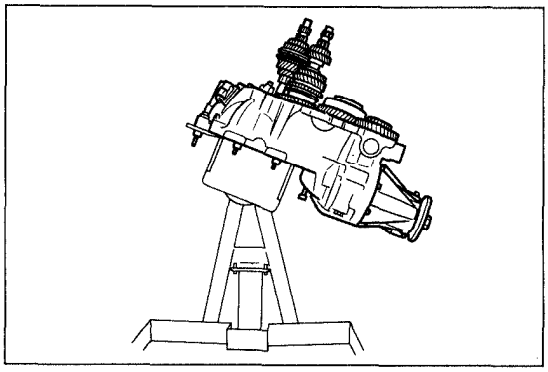

03U0J3-039

Primary shaft assembly, secondary shaft assembly, front and center differential assembly

1. Lean the clutch housing as shown.

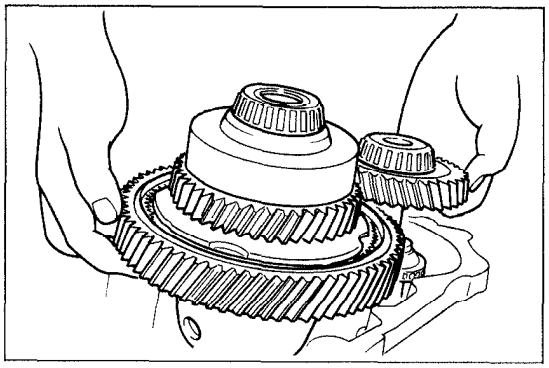

03U0J3-040

2. Hold the front differential assembly and the idler gear assembly so that primary shaft and secondary shaft can be removed.

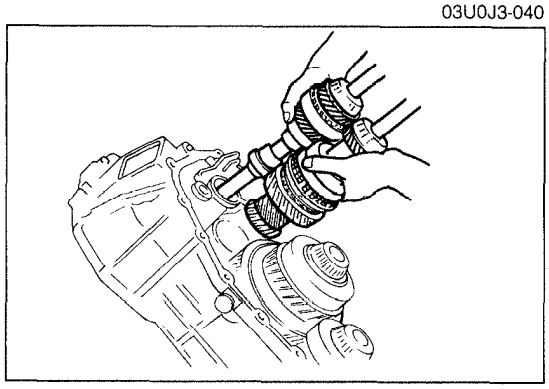

03U0J3-041

3. Remove the primary shaft assembly, secondary shaft assembly and shift fork assembly together.

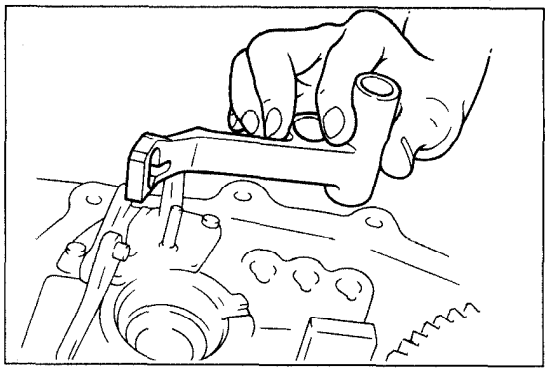

03U0J3-042

4. Remove the shift gate.

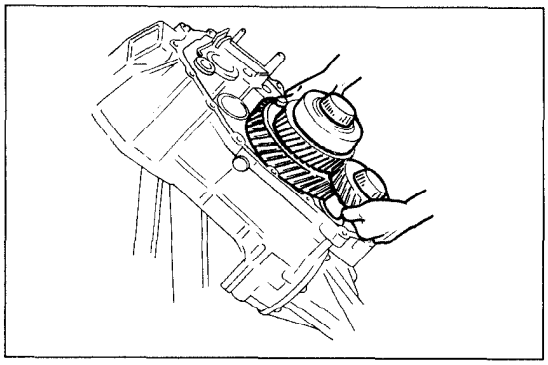

03U0J3-043

5. Remove the front and center differential assembly, idler gear assembly and center differential lock shift fork assembly together.

Downloaded from www.Manualslib.com manuals search engine

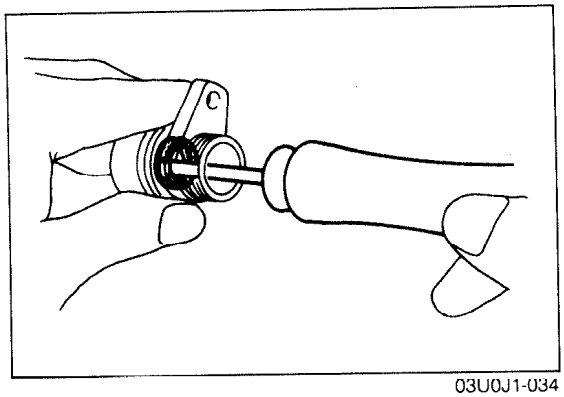

03U0J1-034

Oil seal (Speedometer gear case)

1. Remove the oil seal as shown in the figure.

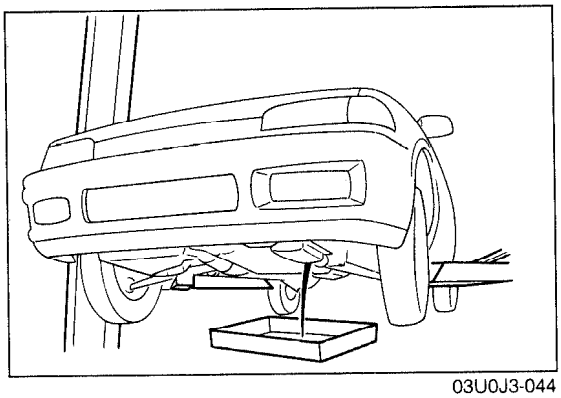

03U0J3-044

Oil seal (Driveshaft)
Replacement (On-vehicle)

1. Jack up the vehicle and support it with safety stands.
2. Drain the transaxle oil.
3. Remove the concerned front wheel.
4. Remove the splash shield.
5. Separate the front stabilizer from the lower arm.

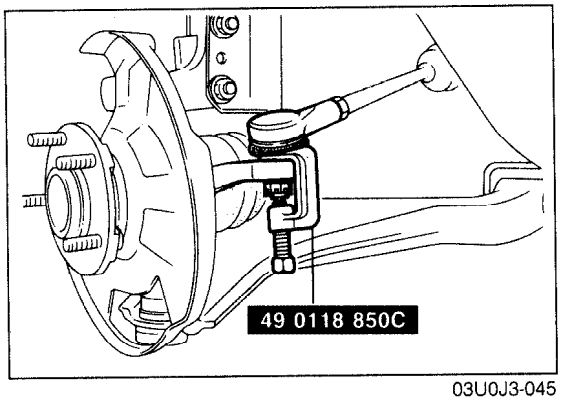

03U0J3-045

Caution
- **Do not damage the dust boots.**

6. Remove the clinch bolt and pull the lower arm downward. Separate the knuckle from the lower arm ball joint.
7. Loosen the nut and disconnect the tie-rod end with the **SST**.

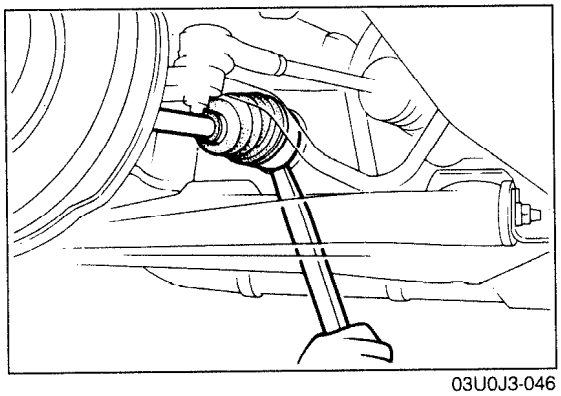

03U0J3-046

Caution
- **Do not subject the tripod joint to shock when removing the driveshaft.**

8. Disconnect the driveshaft from the transaxle by prying with a bar inserted between the outer ring and the transaxle.
9. Suspend the driveshaft with a rope.

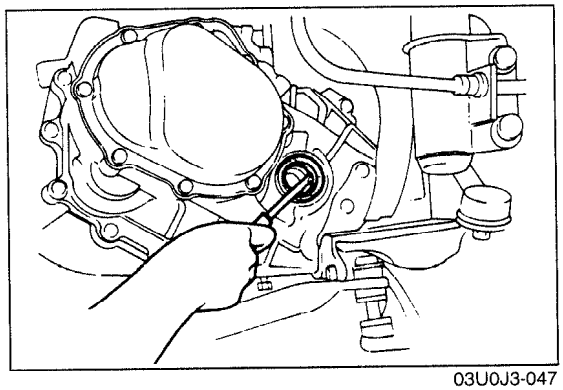

03U0J3-047

10. Remove the oil seal with a screwdriver.

Downloaded from www.Manualslib.com manuals search engine

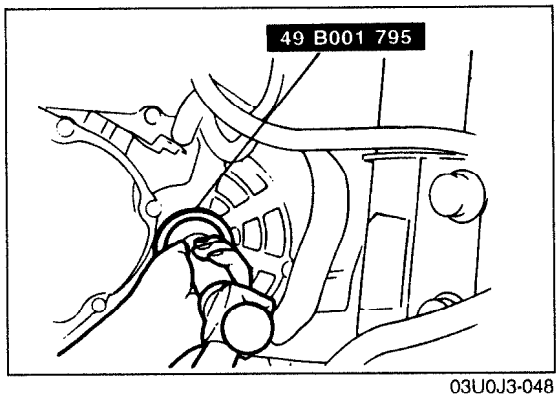

03U0J3-048

Note
- **Tap in until the oil seal installer contacts the case.**
- **Coat the oil seal lip with transaxle oil.**

11. Tap the new oil seal into the transaxle case with the **SST**.

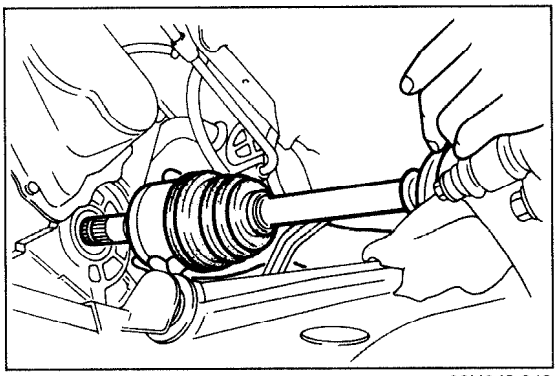
03U0J3-049

12. Replace the driveshaft end clip with a new one. Insert the driveshaft with the end-gap of the clip facing upward.
13. Install the joint shaft.

Tightening torque:
42—62 N·m (4.3—6.3 m-kg, 31—46 ft-lb)

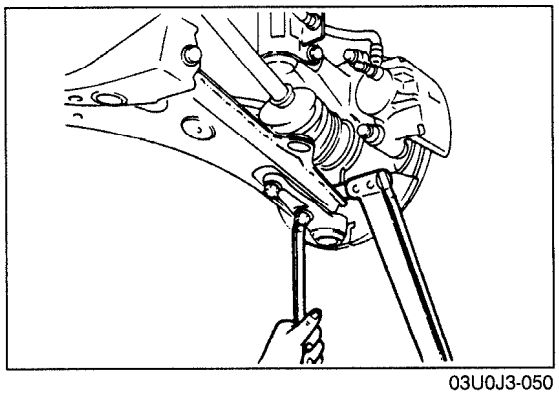
03U0J3-050

14. Install the lower arm ball joint to the knuckle and tighten.

Tightening torque:
43—54 N·m (4.4—5.5 m-kg, 32—40 ft-lb)

15. Install the tie-rod end to the knuckle and tighten it.

Tightening torque:
29—44 N·m (3.0—4.5 m-kg, 22—33 ft-lb)

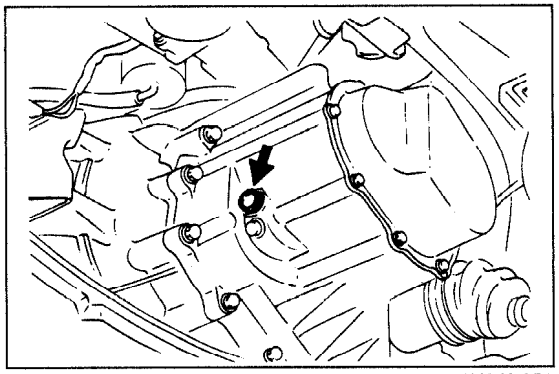
03U0J3-051

16. Install a new gasket, and the drain plug, and add the specified oil from check plug port.

Tightening torque:
39—59 N·m (4.0—6.0 m-kg, 29—43 ft-lb)

Downloaded from www.Manualslib.com manuals search engine

MEMO

Downloaded from www.Manualslib.com manuals search engine

Clutch Housing and Transaxle Case Components

Caution
- **Do not remove an oil seal if not necessary.**

1. Disassemble in the order shown in the figure, referring to **Disassembly Note**.
2. Inspect all parts and repair or replace as necessary.

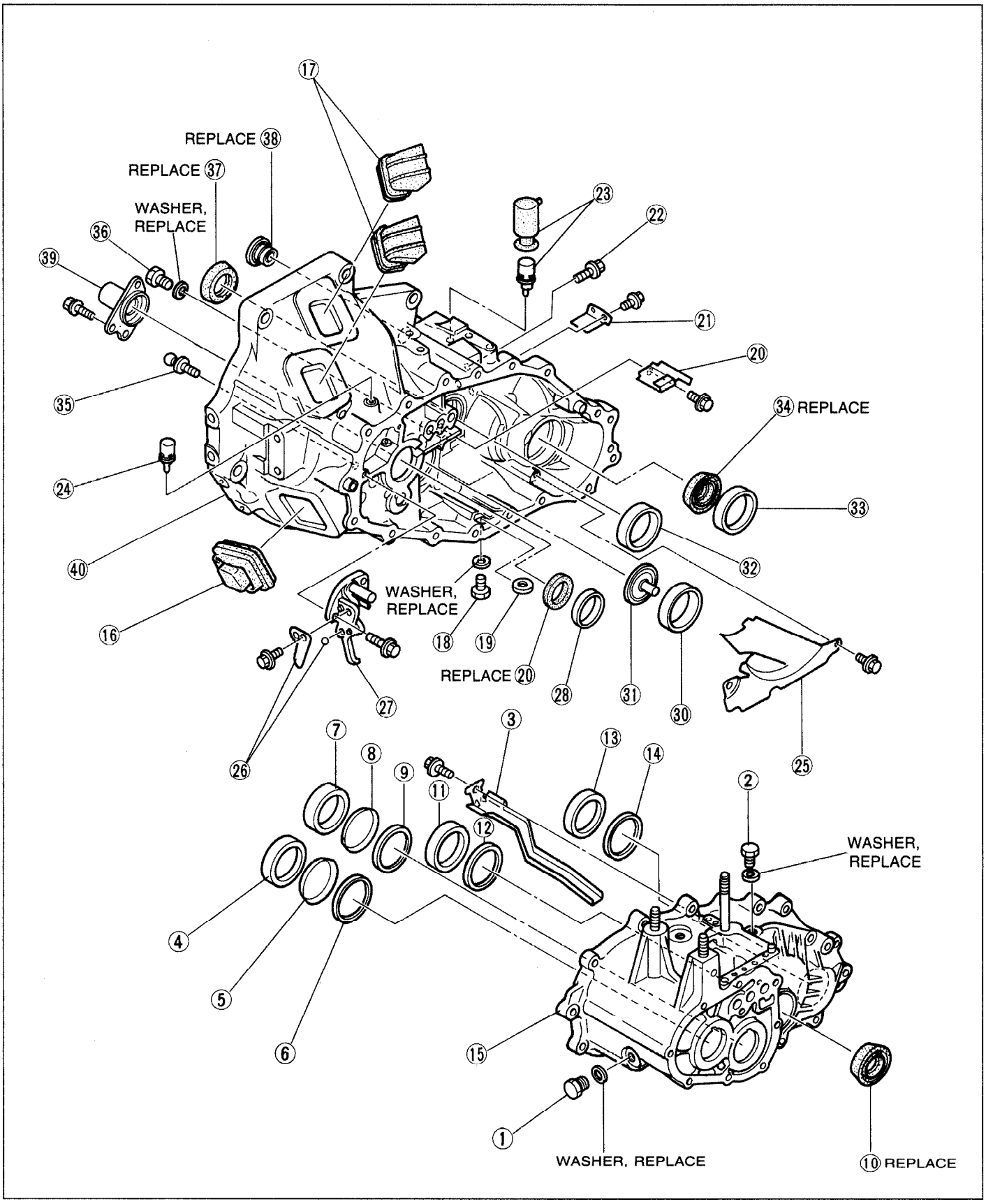

03U0J3-052

Downloaded from www.Manualslib.com manuals search engine

1. Plug
2. Plug
3. Oil guide
4. Bearing outer race
5. Diaphragm spring
6. Adjustment shim
7. Bearing outer race
8. Diaphragm spring
9. Adjustment shim
10. Oil seal
    Disassembly Note ..... page J3–29
11. Bearing outer race
    Disassembly Note ..... page J3–30
12. Adjustment shim
13. Bearing outer race
14. Adjustment shim
15. Transaxle case
16. Dust cover
17. Ventilator covers
18. Plug
19. Magnet
20. Oil guide
21. Baffle
22. Bolt
23. Air breather dust boot and air breather
24. Air breather
25. Baffle
26. Lever set spring and steel ball
27. Reverse lever support
28. Bearing outer race
29. Oil seal
30. Bearing outer race
    Disassembly Note ..... page J3–30
31. Funnel
    Disassembly Note ..... page J3–30
32. Bearing outer race
33. Bearing outer race
    (Front and center differential side)
    Disassembly Note ..... page J3–29
34. Oil seal
    Disassembly Note ..... page J3–29
35. Pivot pin
36. Plug
37. Oil seal
    Disassembly Note ..... page J3–29
38. Oil seal
39. Front cover
40. Clutch housing

03U0J3-053

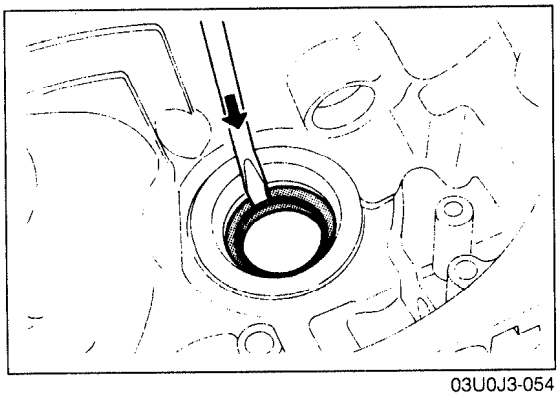

03U0J3-054

Disassembly Note
Oil seal
1. Remove the oil seal with a screwdriver.

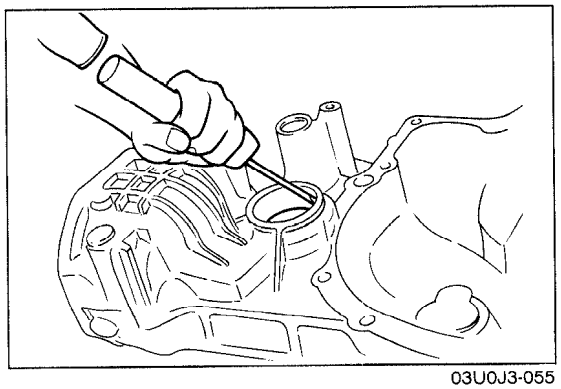

03U0J3-055

Bearing outer race (Front and center differential side)
1. Remove the bearing outer race with a screwdriver.

Downloaded from www.Manualslib.com manuals search engine

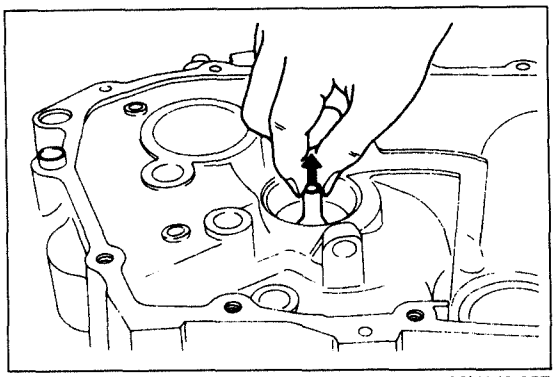

03U0J3-057

Funnel, bearing outer race

Note

- **Remove the bearing outer race with a screwdriver if necessary.**
  - **(1) Insert a screwdriver between the clutch housing and bearing outer race.**
  - **(2) Pry the bearing outer race free.**

1. Remove the bearing outer race by lifting out the funnel and race together.

Downloaded from www.Manualslib.com manuals search engine

Top Cover Assembly

1. Disassemble in the order shown in the figure, referring to **Disassembly Note**.

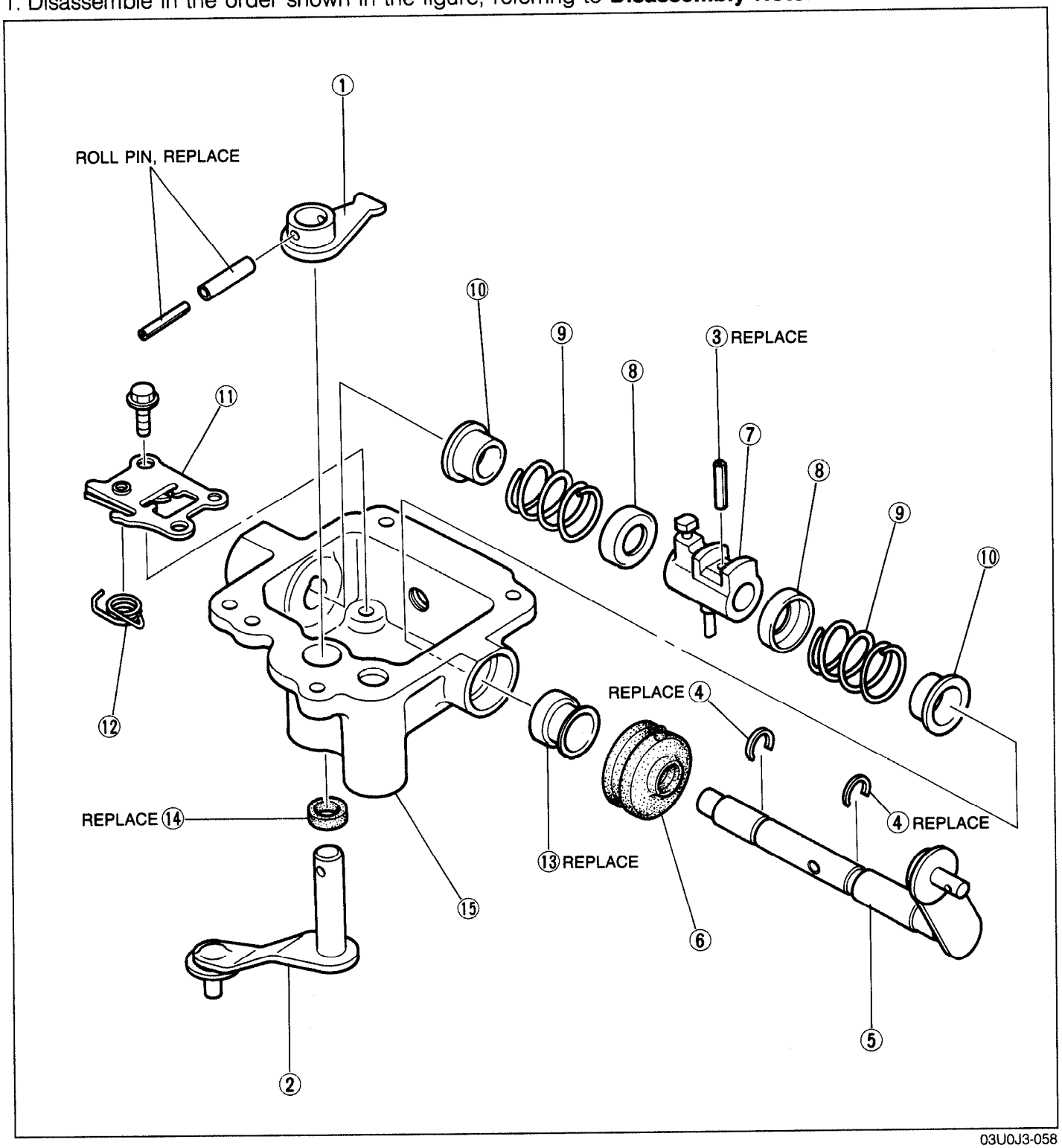

03U0J3-058

1. Inner select lever
2. Select lever
3. Roll pin
   Disassembly Note ..... page J3–32
4. Retaining rings
   Disassembly Note ..... page J3–32
5. Shift lever
6. Boot
7. Inner shift lever
8. Washer
9. Springs
   Disassembly Note ..... page J3–32
10. Guide springs
11. Base plate assembly
12. Reverse gate spring
13. Oil seal
    Disassembly Note ..... page J3–32
14. Oil seal (Select lever side)
15. Top cover

Downloaded from www.Manualslib.com manuals search engine

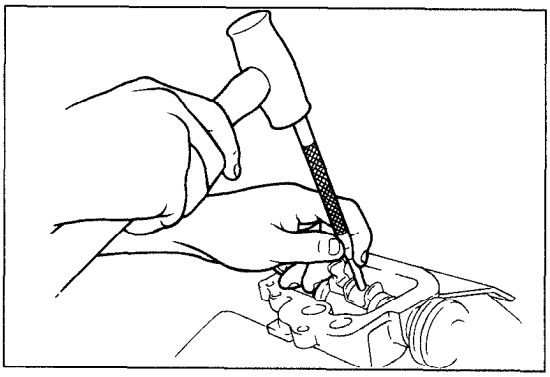

03U0J3-059

Disassembly note
Roll pin
1. Slide the inner shift cover to the boot side.
2. Remove the roll pin.

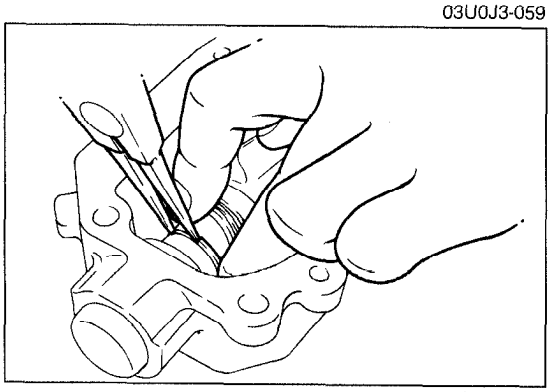

03U0J3-060

Retaining rings
1. Slide the guide spring and remove the retaining ring.
2. Remove the inner shift lever.

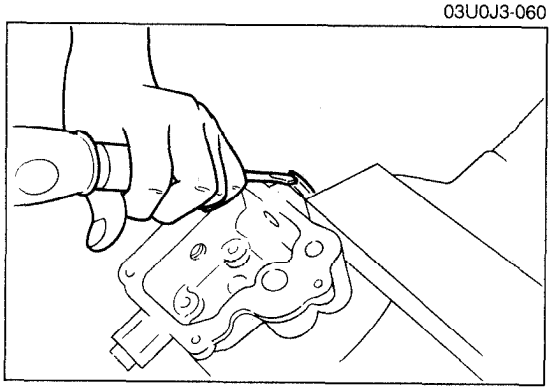

03U0J3-061

Oil seal
1. Remove the oil seal with a screwdriver.

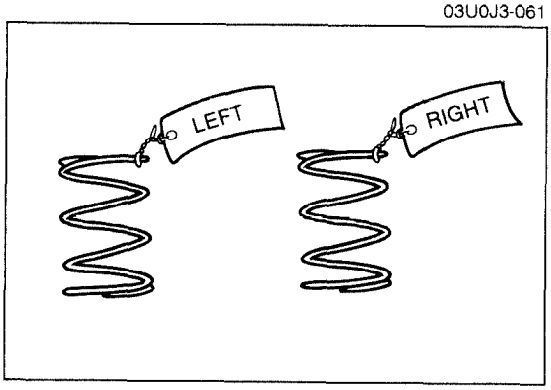

03U0J3-062

Springs

Caution
- **Do not confuse the springs.**
  The boot side spring is shortest.

Note
- **Mark the springs as shown.**

Downloaded from www.Manualslib.com manuals search engine

Primary Shaft Assembly

1. Measure the thrust clearance of all gears before disassembly, referring to **Preinspection**.
2. Disassemble in the order shown in the figure, referring to **Disassembly Note**.

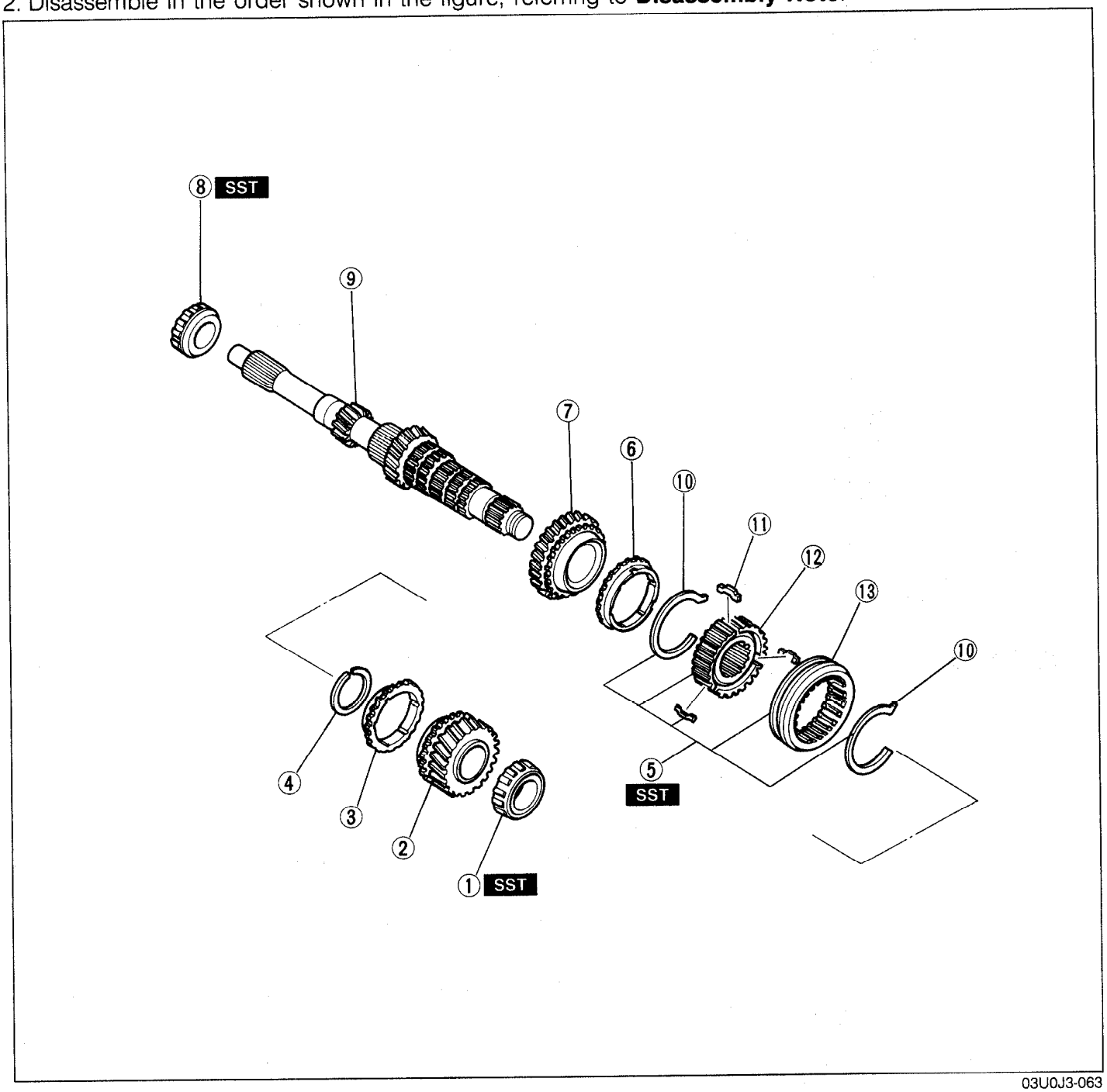

03U0J3-063

1. Bearing inner race (4th gear end)
   - Preinspection ..... page J3–34
   - Disassembly Note ..... page J3–34
2. 4th gear
   - Inspection..... page J3–45
3. Synchronizer ring (4th)
   - Inspection..... page J3–45
4. Retaining ring
5. Clutch hub assembly (3rd/4th)
   - Disassembly Note ..... page J3–34
   - Inspection..... page J3–45
6. Synchronizer ring (3rd)
   - Inspection..... page J3–45
7. 3rd gear
   - Preinspection ..... page J3–45
   - Inspection..... page J3–45
8. Bearing inner race (Primary shaft end)
   - Disassembly Note ..... page J3–45
9. Primary shaft
   - Inspection..... page J3–46
10. Synchronizer springs
11. Synchronizer keys
12. Clutch hub
13. Clutch hub sleeve

Downloaded from www.Manualslib.com manuals search engine

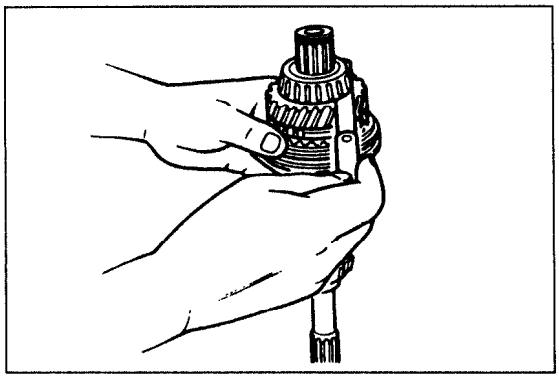

03U0J3-064

Preinspection

1. Measure the clearance between the 4th gear and bearing inner race.

   Clearance: 0.165—0.365mm (0.0064—0.0144 in)
   Maximum : 0.415mm (0.0163 in)

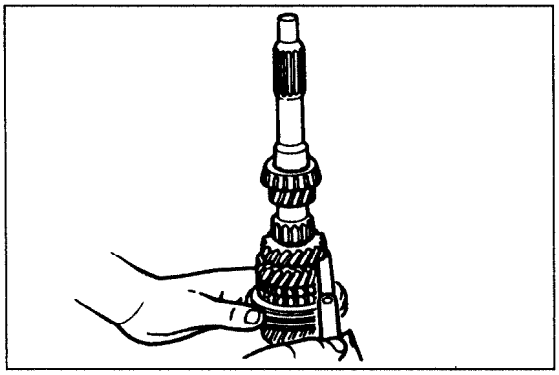

03U0J3-065

2. Measure the clearance between the 3rd gear and 2nd gear.

   Clearance: 0.05—0.20mm (0.002—0.008 in)
   Maximum : 0.25mm (0.010 in)

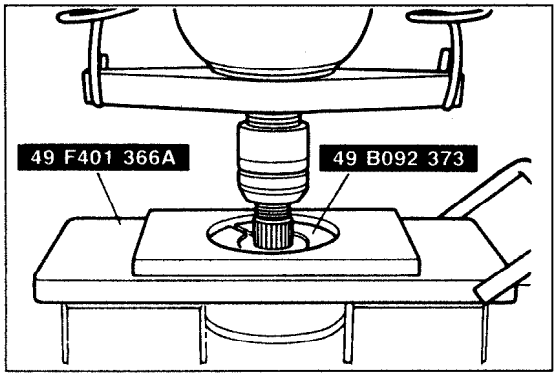

03U0J3-066

Disassembly note
Bearing inner race (4th gear end)

Caution
- **Hold the shaft with one hand so that it does not fall.**

1. Remove the bearing inner race with the **SST**.

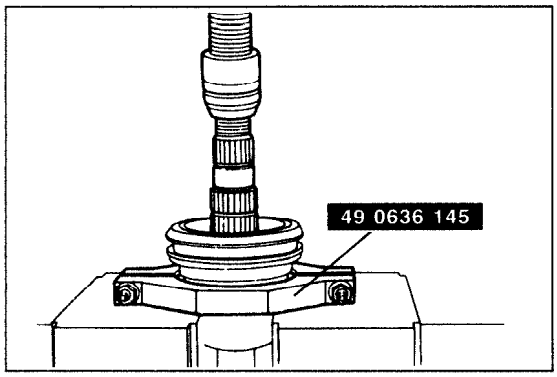

03U0J2-044

Clutch hub assembly (3rd/4th), synchronizer ring (3rd) and 3rd gear

1. Remove the retaining ring.

Caution
- **Hold the shaft with one hand so that it does not fall.**

2. Remove the clutch hub assembly (3rd/4th) synchronizer ring (3rd) and 3rd gear with the **SST**.

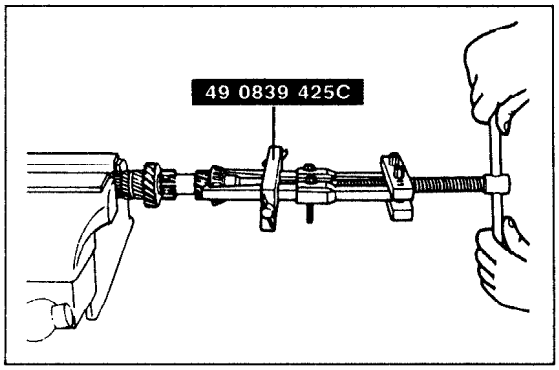

03U0J2-045

Bearing inner race (Primary shaft end)

1. Remove the bearing inner race with the **SST**.

Downloaded from www.Manualslib.com manuals search engine

Secondary Shaft Assembly

1. Measure the thrust clearance of all gears before disassembly, referring to **Preinspection**.
2. Disassemble in the order shown in the figure, referring to **Disassembly Note**.

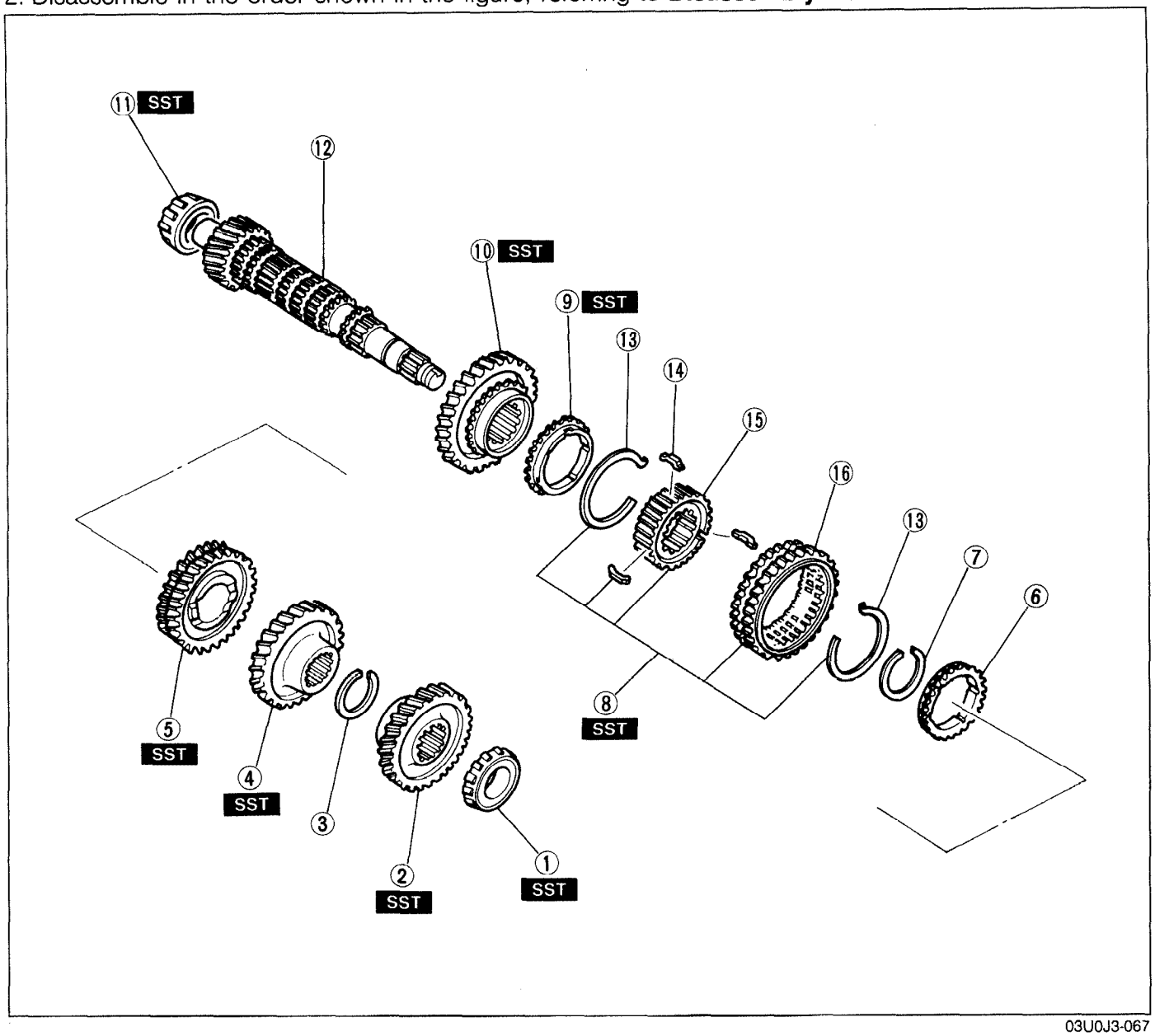

03U0J3-067

1. Bearing inner race
   - Disassembly Note ..... page J3–36
   - Inspection ..... page J3–45
2. Secondary 4th gear
   - Disassembly Note ..... page J3–36
   - Inspection ..... page J3–45
3. Retaining ring
4. Secondary 3rd gear
   - Preinspection ..... page J3–36
   - Disassembly Note ..... page J3–36
   - Inspection ..... page J3–45
5. 2nd gear
   - Disassembly Note ..... page J3–36
   - Inspection ..... page J3–45
6. Synchronizer ring (2nd)
   - Inspection ..... page J3–45
7. Retaining ring
8. Clutch hub assembly (1st/2nd)
   - Inspection ..... page J3–45
9. Synchronizer ring (1st)
   - Inspection ..... page J3–45
10. 1st gear
    - Preinspection ..... page J3–36
    - Disassembly Note ..... page J3–36
    - Inspection ..... page J3–45
11. Bearing inner race
    - Disassembly Note ..... page J3–37
12. Secondary shaft
    - Inspection ..... page J3–46
13. Synchronizer springs
14. Synchronizer keys
15. Clutch hub
16. Clutch hub sleeve (Reverse gear)

Downloaded from www.Manualslib.com manuals search engine

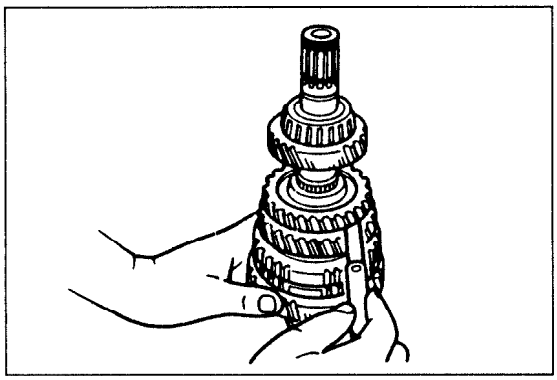

03U0J2-035

Preinspection
Thrust clearance

1. Measure the clearance between the 2nd gear and secondary 3rd gear.

   Clearance: 0.175—0.455mm (0.0069—0.0179 in)
   Maximum : 0.505mm (0.0199 in)

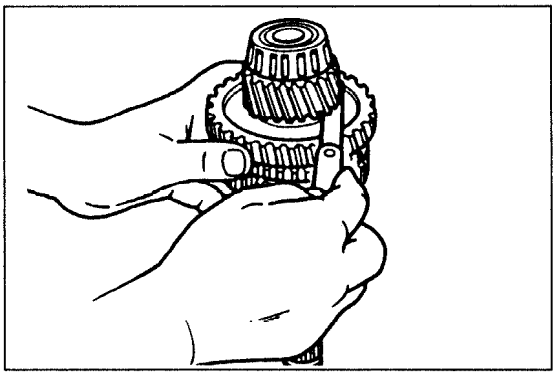

03U0J2-036

2. Measure the clearance between the 1st gear and differential drive gear.

   Clearance: 0.05—0.28mm (0.002—0.011 in)
   Maximum : 0.33mm (0.0130 in)

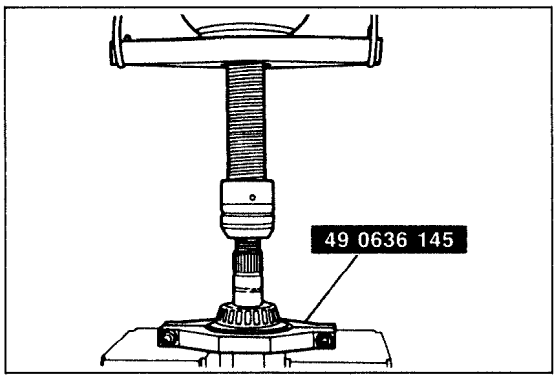

03U0J2-039

Disassembly note
Bearing inner race and secondary 4th gear

Caution
- **Hold the shaft with one hand so that it does not fall.**

1. Remove the bearing inner race and secondary 4th gear with the **SST**.

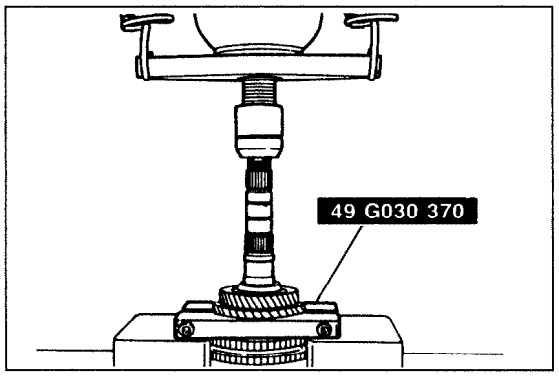

03U0J2-040

Secondary 3rd gear and 2nd gear

1. Remove the retaining ring.
2. Shift the gears to 1st gear.

Caution
- **Hold the shaft with one hand so that it does not fall.**

3. Remove the secondary 3rd gear and 2nd gear with the **SST**.

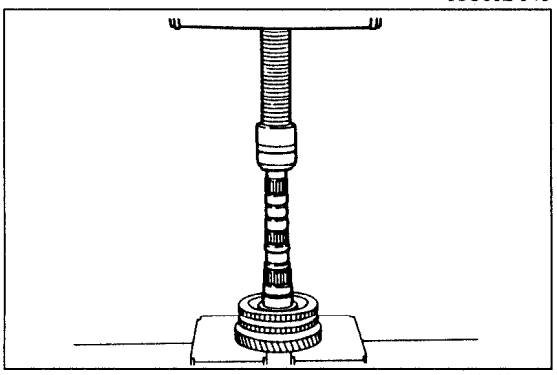

03U0J2-041

Clutch hub assembly (1st/2nd), synchronizer ring (1st), and 1st gear

1. Remove the retaining ring.

Caution
- **Hold the shaft with one hand so that it does not fall.**

2. Remove the clutch hub assembly (1st/2nd), synchronizer ring (1st), and 1st gear with a press.

Downloaded from www.Manualslib.com manuals search engine

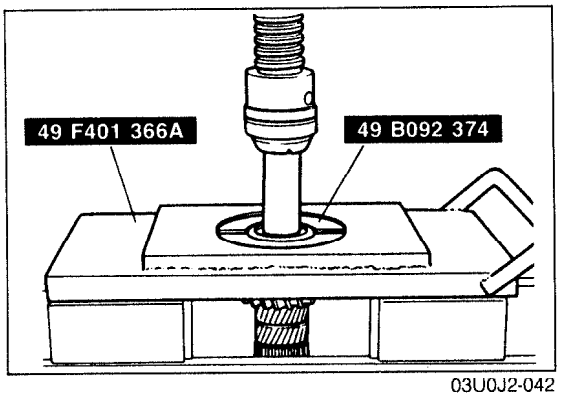

03U0J2-042

Bearing inner race (Secondary shaft end)

Caution
- **Hold the shaft with one hand so that it does not fall.**

1. Remove the bearing inner race with the **SST**.

Downloaded from www.Manualslib.com manuals search engine

Front and Center Differential Assembly

1. Disassemble in the order shown in the figure, referring to **Disassembly Note**.
2. Inspect all parts and repair or replace as necessary.
3. Inspect all bearings for damage and rough rotation, and replace as necessary.

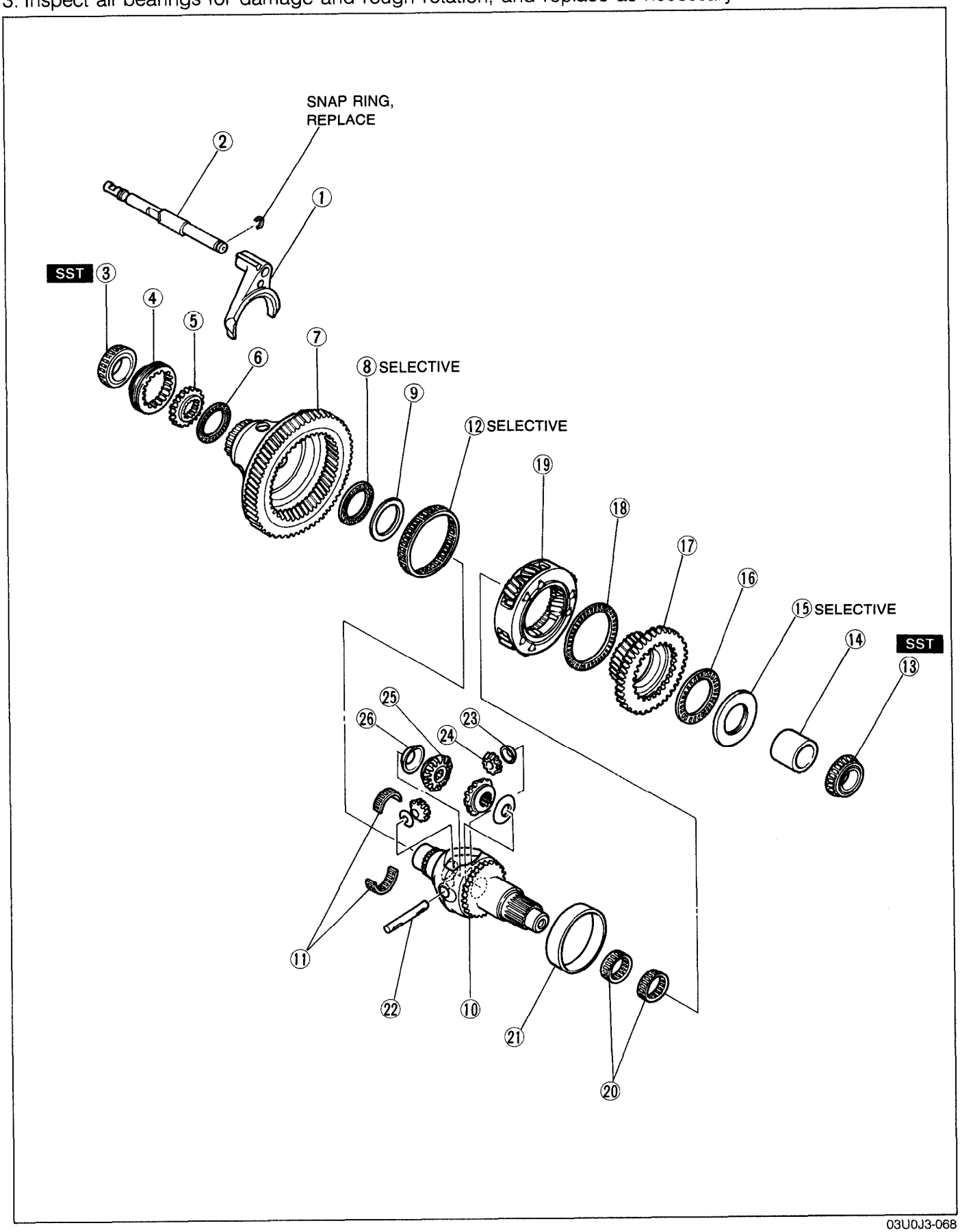

03U0J3-068

Downloaded from www.Manualslib.com manuals search engine

1. Center differential lock shift fork
2. Center differential lock shift rod
3. Bearing inner race (Gear sleeve side)
   Disassembly Note ..... page J3–39
4. Differential lock gear sleeve
5. Differential lock hub
   Inspect for damage and wear
6. Gear case needle bearing
7. Ring gear case
   Inspect gear teeth for wear and cracks
8. Gear case needle bearing
9. Differential lock thrust washer
10. Front differential gear case
11. Gear case needle bearings
12. Gear case needle bearing
13. Bearing inner race (Sun gear side)
    Disassembly Note ..... page J3–39
14. Spacer
15. Thrust washer
16. Gear case needle bearing
17. Sun gear
    Inspect gear teeth for wear and cracks
18. Gear case needle bearing
19. Planetary carrier
    Inspect gears for wear, cracks and rough rotation
20. Gear case needle bearings
21. Differential gear case sleeve
    Disassembly Note ..... page J3–39
22. Pinion shaft
23. Washers
24. Pinion gears
    Inspect gear teeth for wear and cracks
25. Side gears
    Inspect gear teeth for wear and cracks
26. Washers

03U0J3-069

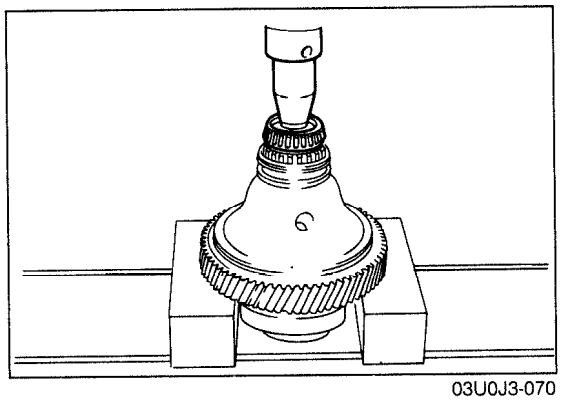

03U0J3-070

Disassembly note
Bearing inner race (Differential lock gear sleeve side)

Caution
- **Hold the front differential gear case with one hand so that it does not fall.**

1. Remove the bearing inner race.

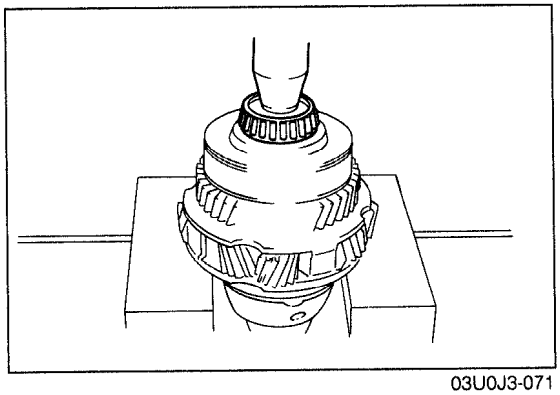

03U0J3-071

Bearing inner race (Sun gear side)

Caution
- **Hold the front differential gear case with one hand so that it does not fall.**

1. Remove the bearing inner race.

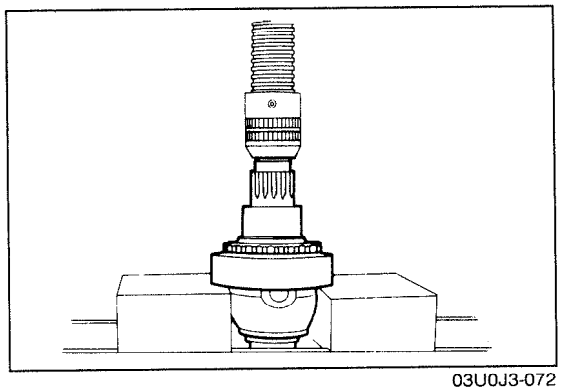

03U0J3-072

Differential gear case sleeve

Caution
- **Hold the front differential gear case with one hand so that it does not fall.**

1. Remove the gear case sleeve with a press.

Downloaded from www.Manualslib.com manuals search engine

Idler Gear Assembly

1. Disassemble in the order shown in the figure, referring to **Disassembly Note**.
2. Inspect all parts and repair or replace as necessary.

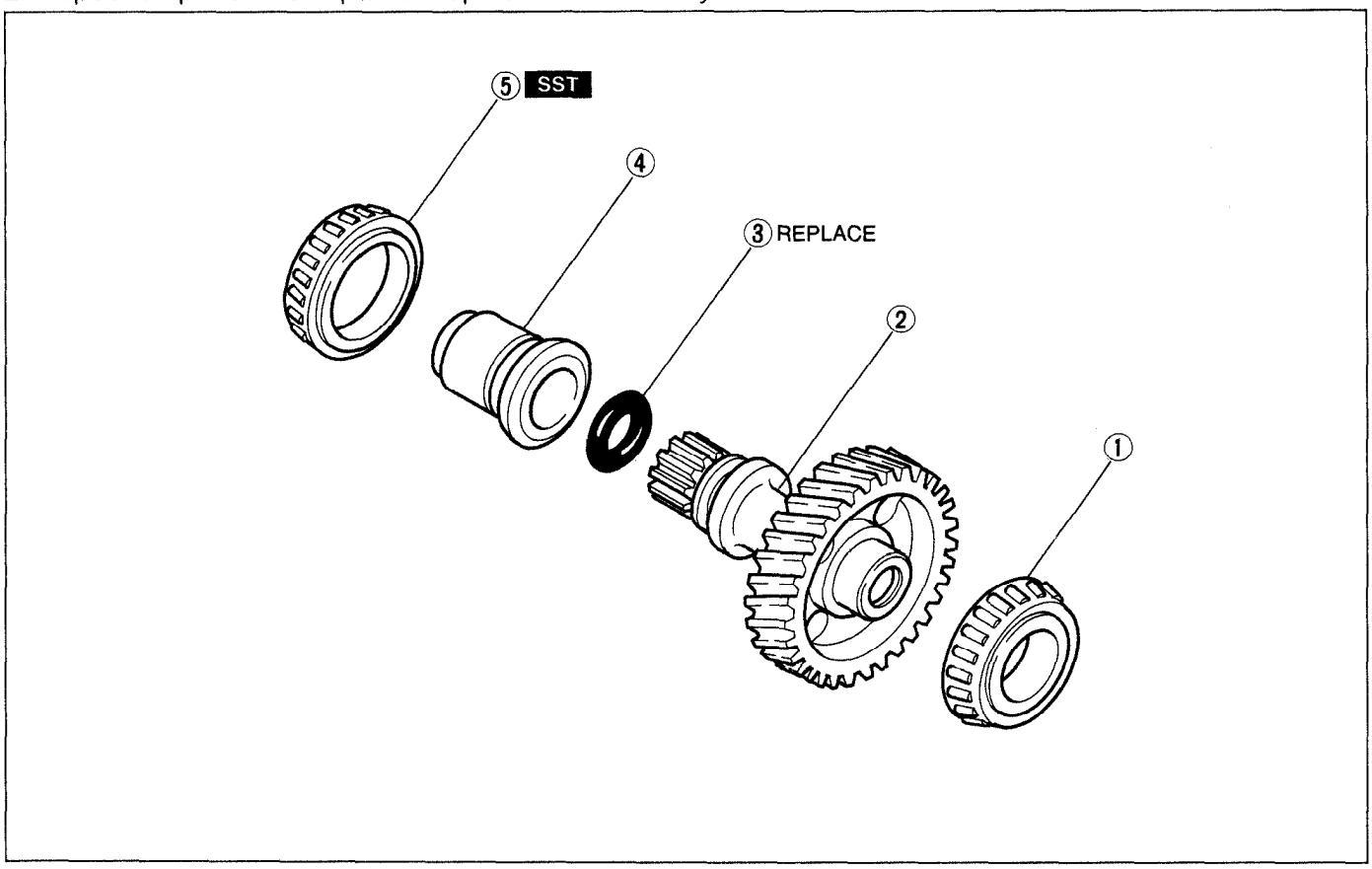

03U0J3-073

1. Bearing inner race (Idler gear side)
   Disassembly Note ..... page J3–40
2. Idler gear
   Inspect gear teeth for wear and cracks
3. O-ring
4. Joint sleeve
5. Bearing inner race (Joint sleeve side)
   Disassembly Note ..... page J3–40

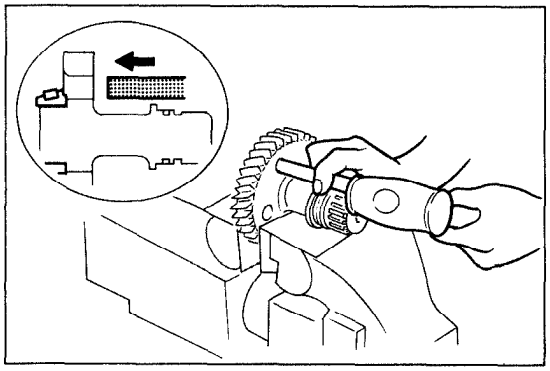

03U0J3-074

Bearing inner race (Idler gear side)

1. Fit a punch through a hole in the idler gear and tap off the bearing inner race.

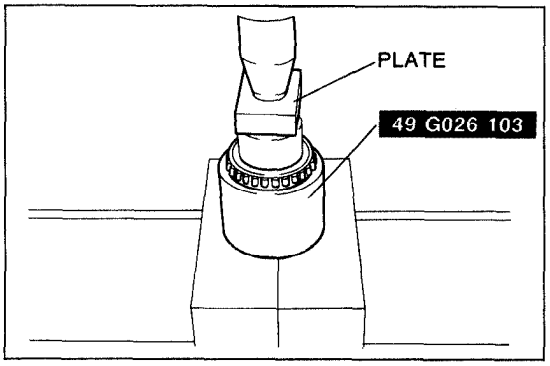

03U0J3-075

Bearing inner race (Joint sleeve side)

Caution
- **Hold the shaft with one hand so that it does not fall.**

1. Remove the bearing inner race with the **SST**.

Downloaded from www.Manualslib.com manuals search engine

MEMO

Downloaded from www.Manualslib.com manuals search engine

Transfer Carrier Assembly

1. Disassemble in the order shown in the figure, referring to **Disassembly Note**.
2. Inspect all parts and repair or replace as necessary.

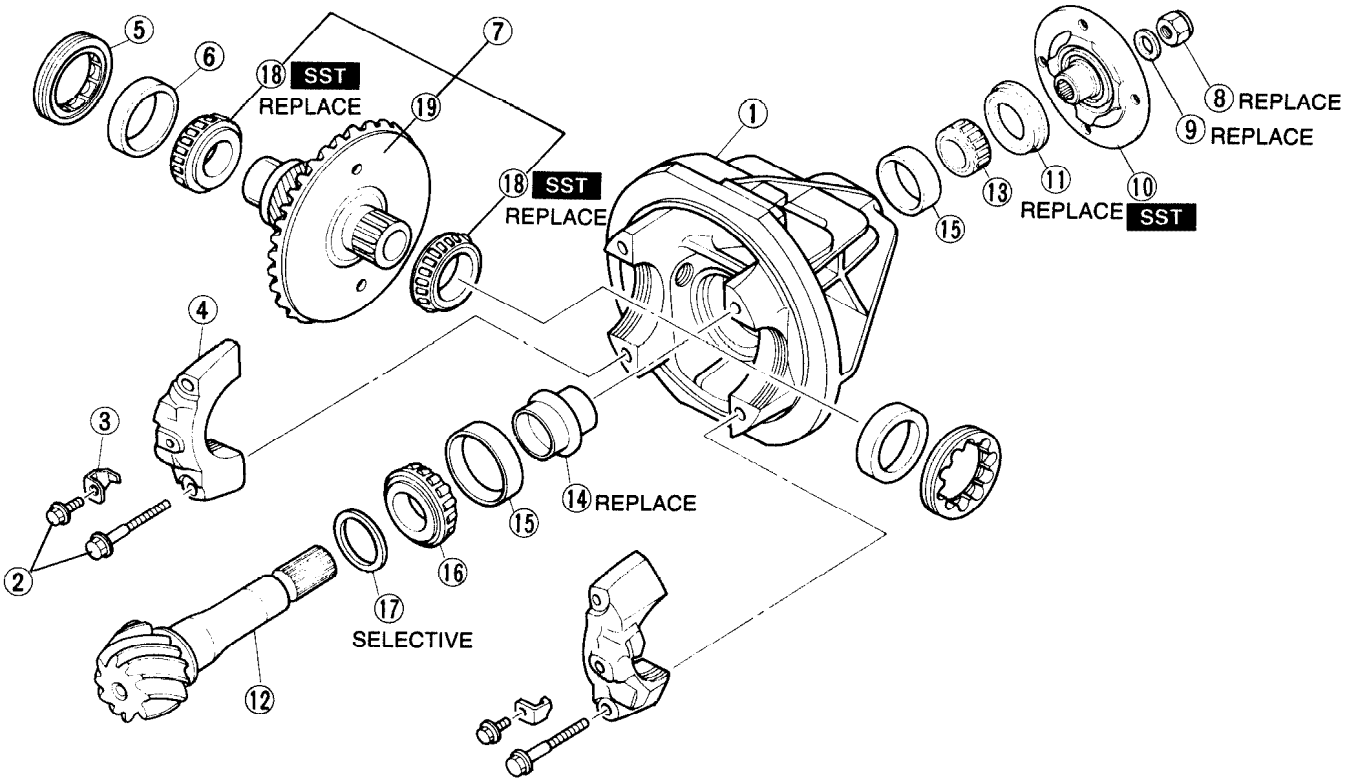

03U0J3-076

Downloaded from www.Manualslib.com manuals search engine

1. Transfer carrier
   Disassembly Note ..... page J3–43
2. Bolts
3. Lock plates
4. Bearing caps
5. Adjusting screws
   Disassembly Note ..... page J3–43
6. Side bearings
7. Ring gear assembly
8. Nut
   Disassembly Note ..... page J3–43
9. Washer
10. Companion flange
    Disassembly Note ..... page J3–43
11. Oil seal
12. Drive pinion
    Disassembly Note ..... page J3–44
13. Bearing inner race
    Disassembly Note ..... page J3–44
    Inspect for damage and rough rotation
14. Collapsible spacer
15. Bearing inner race
    Disassembly Note ..... page J3–44
    Inspect for damage and rough rotation
16. Bearing inner race
    Disassembly Note ..... page J3–44
    Inspect for damage and rough rotation
17. Spacer
18. Bearing inner races (Side bearing)
    Disassembly Note ..... page J3–44
19. Ring gear

03U0J3-077

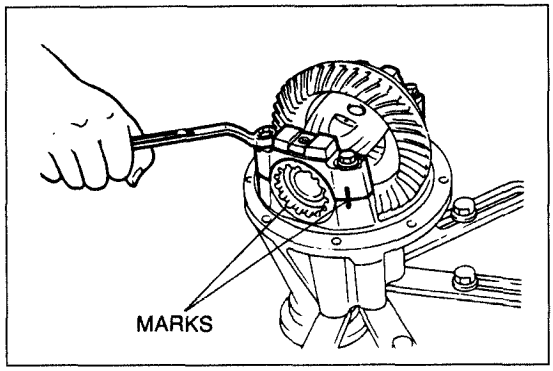

03U0J3-078

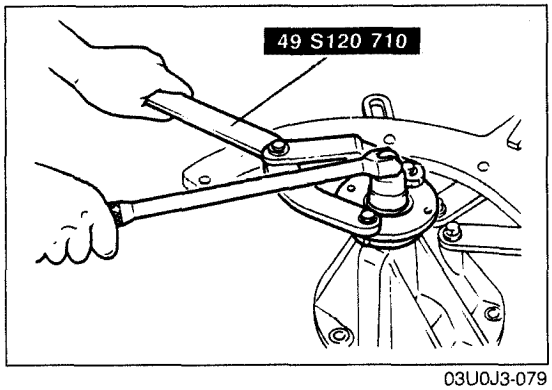

03U0J3-079

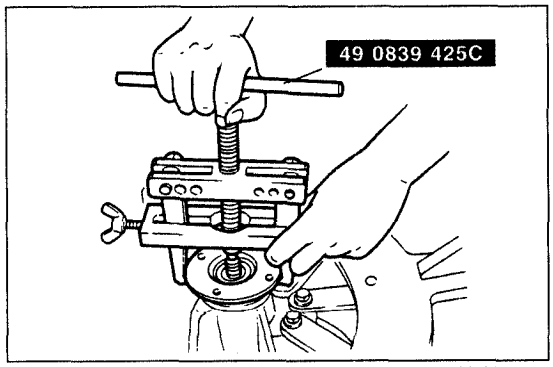

03U0MX-863

Disassembly Note
Transfer carrier
1. Mark one bearing cap and the carrier for proper reassembly.

Adjusting screw
1. Mark one adjusting screw and the carrier for proper reassembly.

Nut
1. Hold the companion flange with the **SST** and remove the nut.

Companion flange
1. Remove the companion flange with the **SST**.

Downloaded from www.Manualslib.com manuals search engine

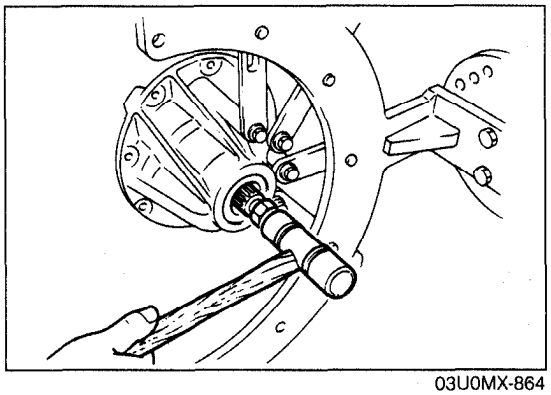

03U0MX-864

Drive pinion

1. Push out the drive pinion by attaching a miscellaneous nut to the drive pinion and tapping it with a copper hammer.

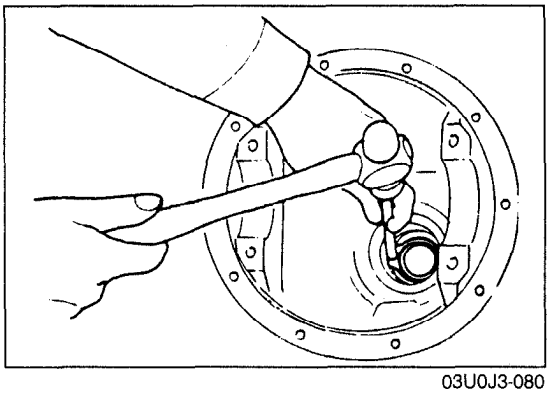

03U0J3-080

Bearing outer race

Note
- **Identify the bearing outer races for proper reassembly.**

1. Remove the bearing outer races by alternately tapping the races at the two grooves in the carrier.

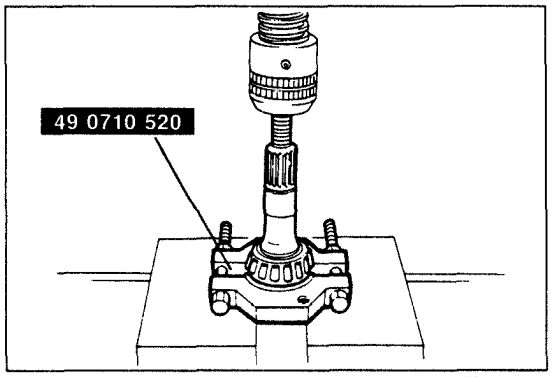

03U0J3-081

Bearing inner race (Drive pinion)

Note
- **Support the drive pinion by hand so that it does not fall.**

1. Remove the bearing with the **SST**.

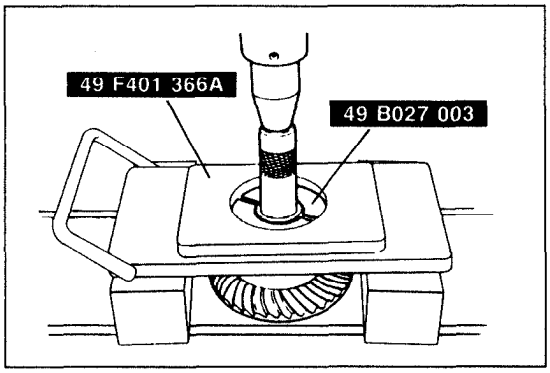

03U0J3-218

Bearing inner races (Side bearing)

Note
- **Support the ring gear by hand so that it does not fall.**

1. Remove the bearing inner race with the **SST**.

Downloaded from www.Manualslib.com manuals search engine

INSPECTION

Inspect all parts and repair or replace as necessary.

05U0JX-023

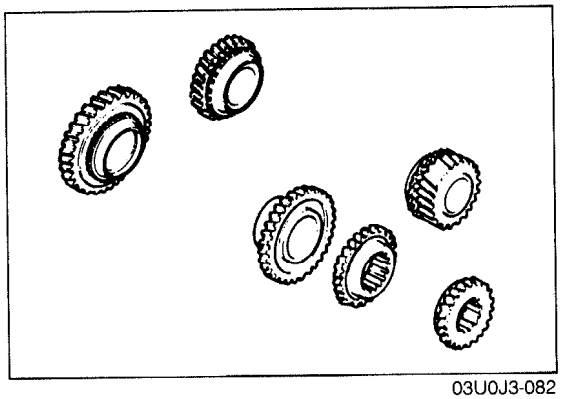

03U0J3-082

Gears (1st, 2nd, 3rd, 4th)

1. Inspect the synchronizer cones for wear.
2. Inspect the individual gear teeth for damage, wear, and cracks.
3. Inspect the synchronizer ring matching teeth for damage and wear.

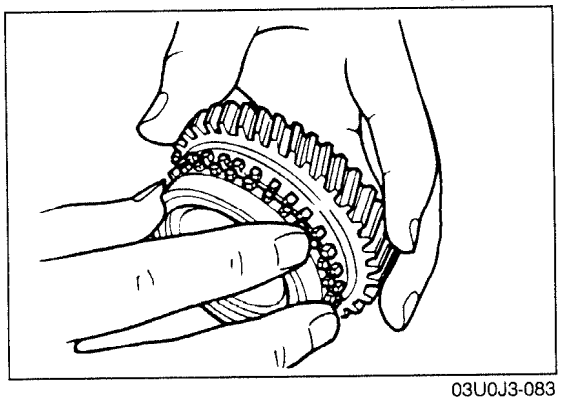

03U0J3-083

Synchronizer ring, gear (1st, 2nd, 3rd, 4th)

1. Inspect the individual synchronizer ring teeth for damage, wear, and cracks.
2. Inspect the taper surface for wear and cracks.

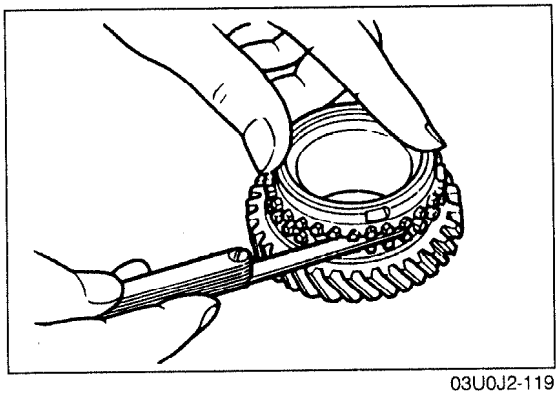

03U0J2-119

Note

- **Set the synchronizer ring squarely in the gear; then measure around the circumference.**

3. Measure the clearance between the synchronizer ring and flank surface of the gear.

Standard clearance: 1.5mm (0.059 in)
Minimum: 0.8mm (0.031 in)

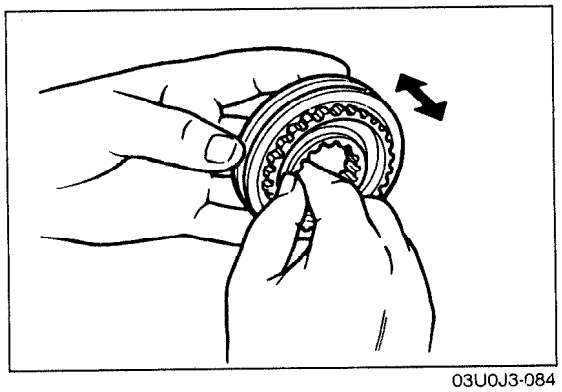

03U0J3-084

Clutch hub assembly

1. Inspect the clutch hub sleeve and hub operation.
2. Inspect the individual gear teeth for damage, wear, and cracks.
3. Inspect the synchronizer keys for damage, wear, and cracks.

Downloaded from www.Manualslib.com manuals search engine

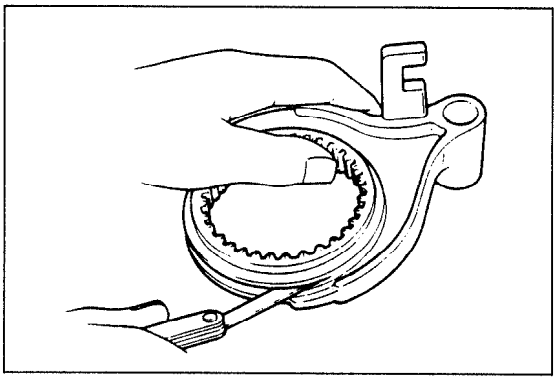

03U0J3-219

Shift fork

1. Measure the clearance between hub sleeve and shift fork.

Clearance

mm (in)

	Standard	Maximum
1st/2nd	0.10—0.358 (0.004—0.014)	0.858 (0.034)
3rd/4th	0.10—0.40 (0.004—0.016)	0.90 (0.035)
5th/Rev.	0.10—0.40 (0.004—0.016)	0.90 (0.035)

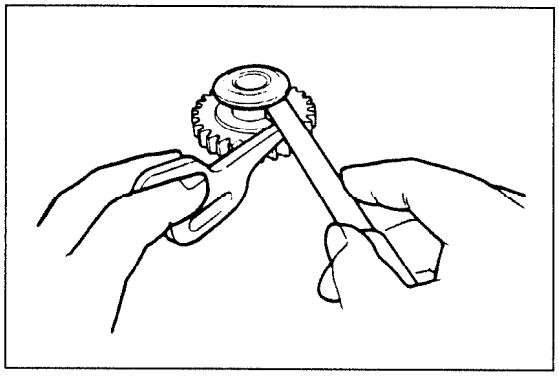

03U0J3-220

Reverse idler gear and reverse lever

1. Inspect gear teeth for damage, wear, and cracks.
2. Measure the clearance between the reverse idler gear bushing and the reverse lever.

Standard clearance:
0.095—0.345mm (0.0037—0.0136 in)
Maximum: 0.845mm (0.0333 in)

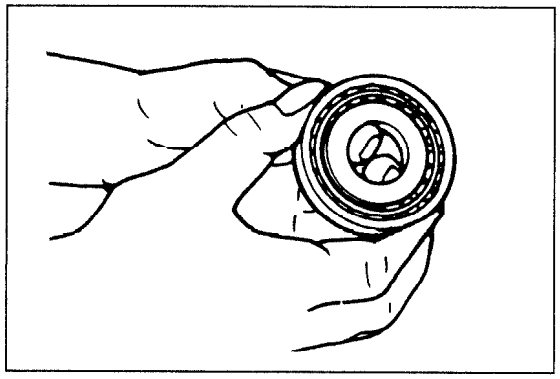

03U0J2-115

Bearing

1. Inspect for damage and rough rotation.

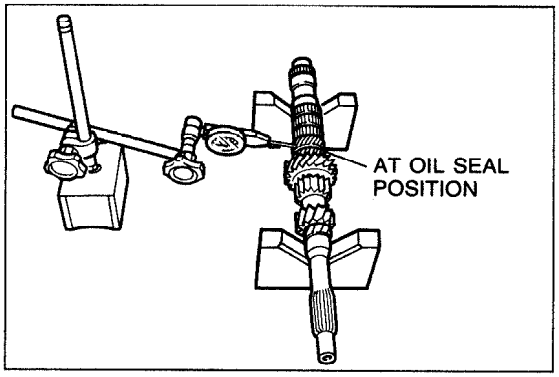

03U0J3-085

Primary Shaft and Secondary Shaft

1. Inspect the gear contact surface for damage and wear.
2. Inspect the splines for damage and wear.
3. Inspect the gear teeth for damage, wear, and cracks.
4. Inspect the oil passage for clogging.
5. Inspect the shaft gear runout.

Primary shaft gear runout: 0.05mm (0.002 in)

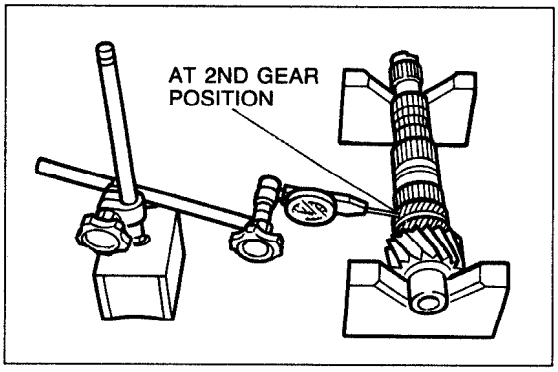

03U0J3-221

Secondary shaft gear runout: 0.015mm (0.0006 in)

Note

- **If the shaft gear is replaced, adjust the bearing preload.**

Downloaded from www.Manualslib.com manuals search engine

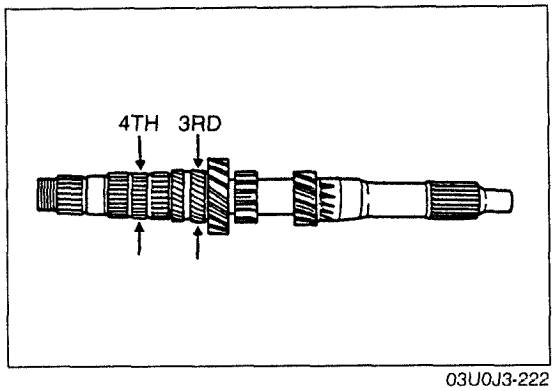

03U0J3-222

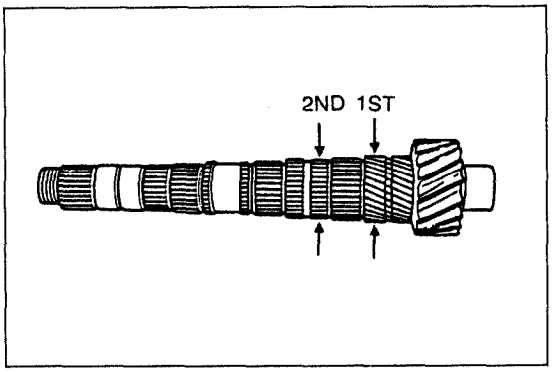

6. Oil clearance between shaft gears and gears.

Oil Clearance

mm (in)

	Shaft (Outer dia.)	Gear (Inner dia.)	Sleeve (Outer dia.)	Oil clearance
1st	39.445—39.470 (1.553—1.554)	39.500—39.525 (1.555—1.556)	—	0.03—0.08 (0.001—0.003)
2nd	34.945—34.970 (1.376—1.377)	35.000—35.025 (1.378—1.379)	—	
3rd	35.945—35.970 (1.415—1.416)	36.000—36.025 (1.417—1.418)	—	
4th	30.945—30.970 (1.218—1.219)	31.000—31.025 (1.220—1.221)	—	
5th	—	34.000—34.025 (1.339—1.400)	33.945—33.970 (1.336—1.337)	

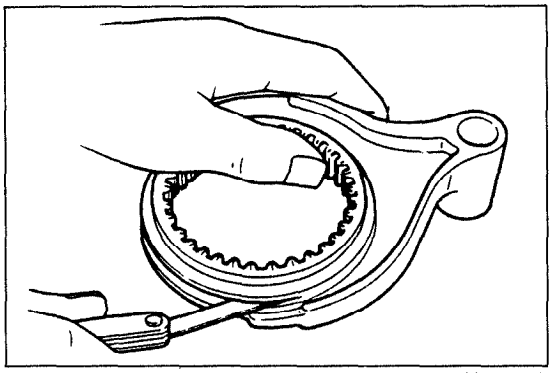

03U0J3-086

Differential Lock Gear Sleeve

1. Measure the clearance between the gear sleeve groove and shift fork.

   Standard clearance: 0.15—0.50mm (0.006—0.02 in)
   Maximum: 1.0mm (0.394 in)

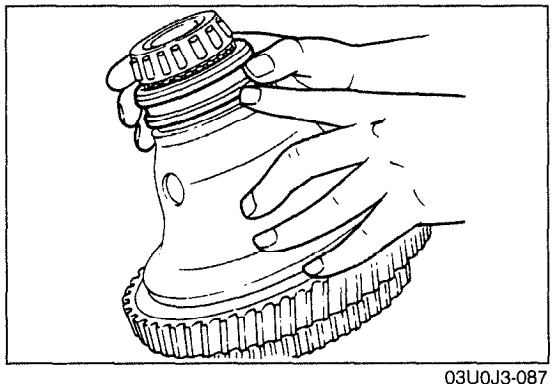

03U0J3-087

2. Inspect for damage and rough rotation.

Downloaded from www.Manualslib.com manuals search engine

ASSEMBLY

Precaution

1. All O-rings and gaskets must be replaced with the new ones supplied in the overhaul kit.
2. Verify that all parts are completely clean before assembly.
3. Assemble parts within 10 minutes after applying sealant.
   Allow all sealant to cure at least 30 minutes after assembly before filling the transaxle with transaxle oil.
4. Bearing outer races and inner races must be replaced as assemblies.

03U0J3-088

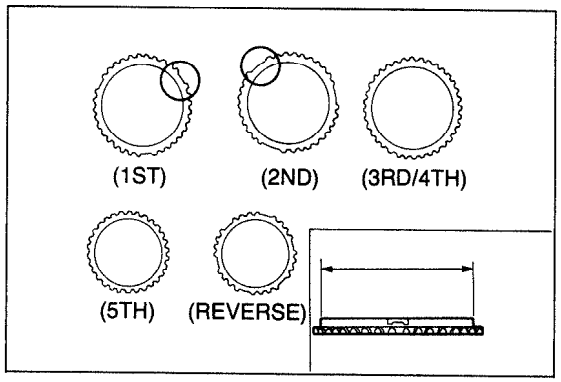

03U0J3-089

Clutch hub assembly

Note

- **Synchronizer ring diameters are as follows.**

mm (in)

1st and 2nd	67.7 (2.665)
3rd and 4th	67.7 (2.665)
5th and Reverse	55.7 (2.192)

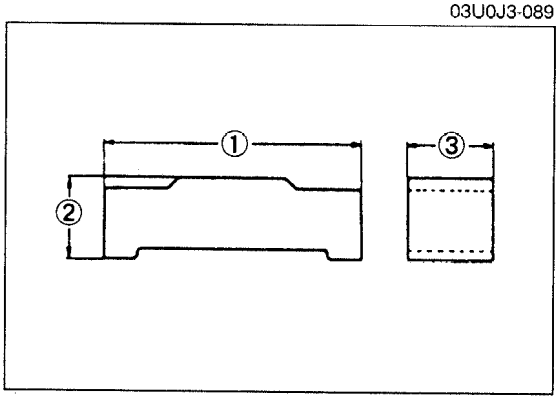

03U0J3-223

- **Synchronizer key dimensions are as follows.**

mm (in)

	①	②	③
1st/2nd	19.00 (0.748)	4.25 (0.167)	5.00 (0.197)
3rd/4th	17.00 (0.669)	4.25 (0.167)	5.00 (0.197)
5th	17.00 (0.669)	4.25 (0.167)	5.00 (0.197)

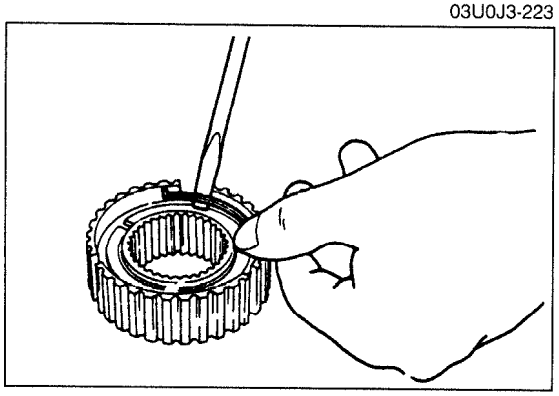

03U0J1-066

1. Install the synchronizer key springs in the clutch hub with the hooks in the grooves to hold the three synchronizer keys in place.

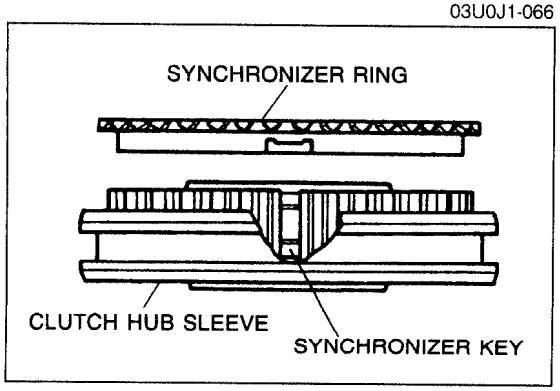

03U0J1-067

2. Align the synchronizer ring grooves with the synchronizer key during assembly.

Downloaded from www.Manualslib.com manuals search engine

MEMO

Downloaded from www.Manualslib.com manuals search engine

Transfer Carrier Assembly

1. Assemble in the reverse order of disassembly, referring to **Assembly Note**.

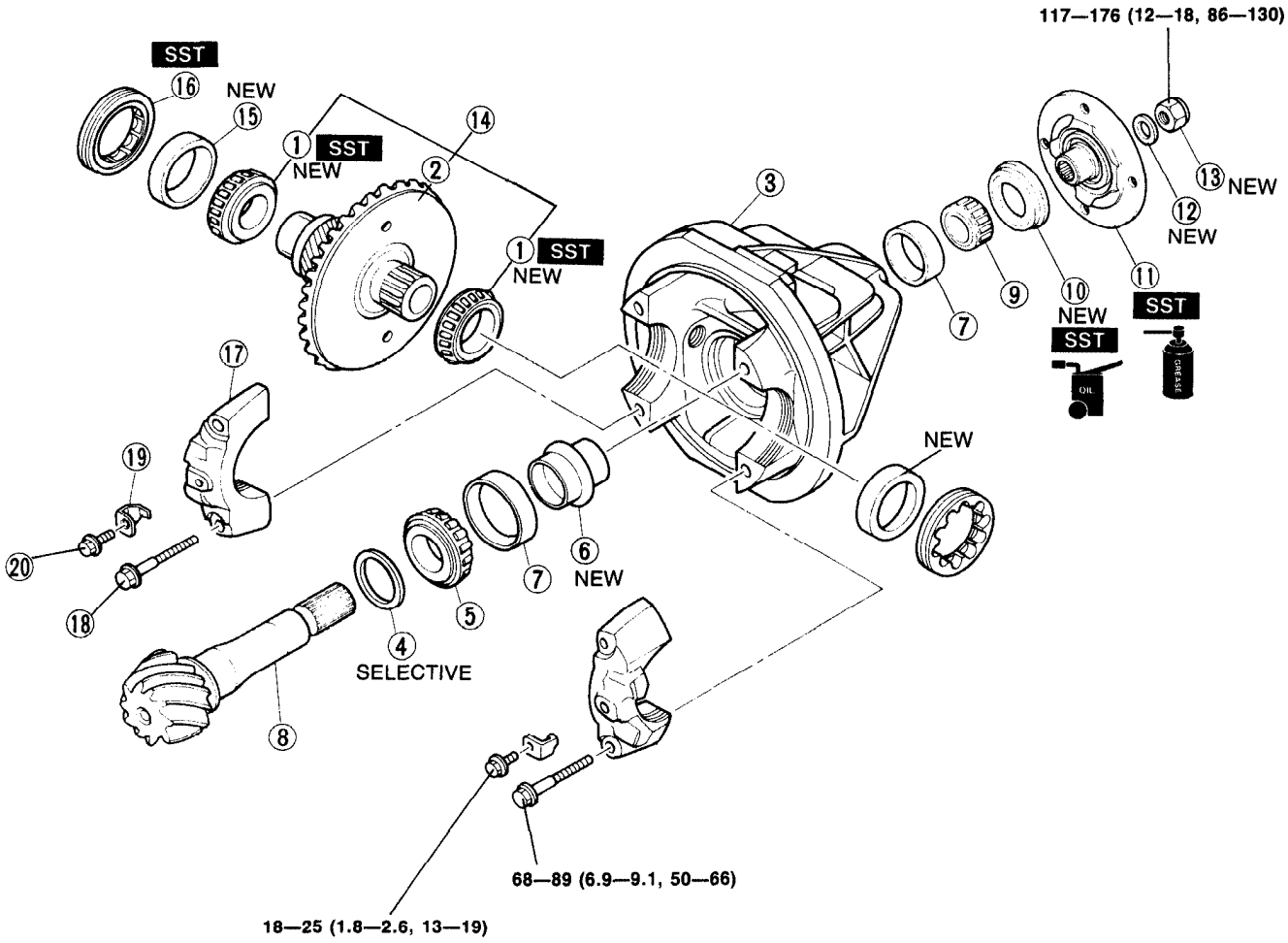

N-m (m-kg, ft-lb)

03U0J3-090

Downloaded from www.Manualslib.com manuals search engine

1. Bearing inner races (Side bearing)
   Assembly Note..... page J3–51
2. Ring gear
3. Transfer carrier
4. Spacer
   Assembly Note..... page J3–53
5. Bearing inner race (Drive pinion side)
   Assembly Note..... page J3–53
6. Collapsible spacer
7. Bearing inner race
8. Drive pinion
   Assembly Note..... page J3–52
9. Bearing inner race
10. Oil seal
    Assembly Note..... page J3–54
11. Companion flange
    Assembly Note..... page J3–54
12. Washer
13. Nut (Companion flange)
14. Ring gear assembly
15. Bearing outer races (Side bearing)
16. Adjusting screws
    Assembly Note..... page J3–54
17. Bearing caps
18. Bolts
19. Lock plates
20. Bolts

03U0J3-091

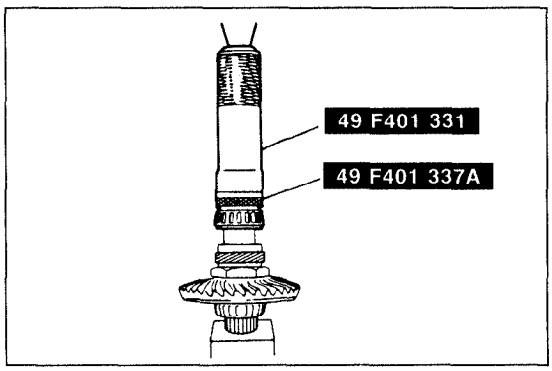

03U0J3-092

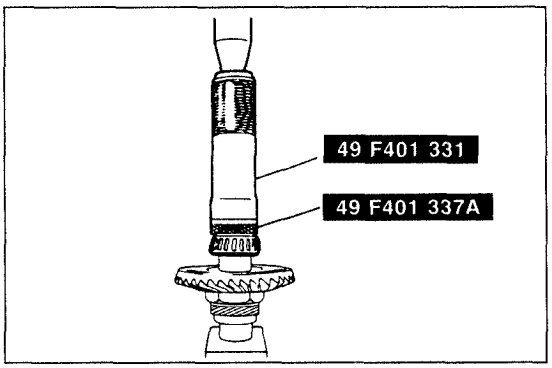

03U0J3-093

Assembly note
Bearing inner races (Side bearing)
1. Install the bearing with the **SST**.

2. Install the front and rear bearing outer races with a brass drift and a hammer.

Downloaded from www.Manualslib.com manuals search engine

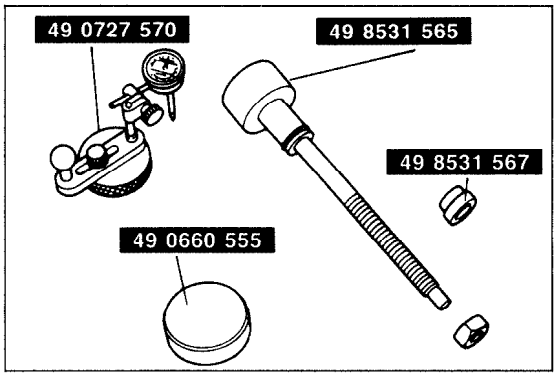

03U0MX-869

Adjustment of pinion height

1. Adjust the drive pinion height as follows with the **SST**.

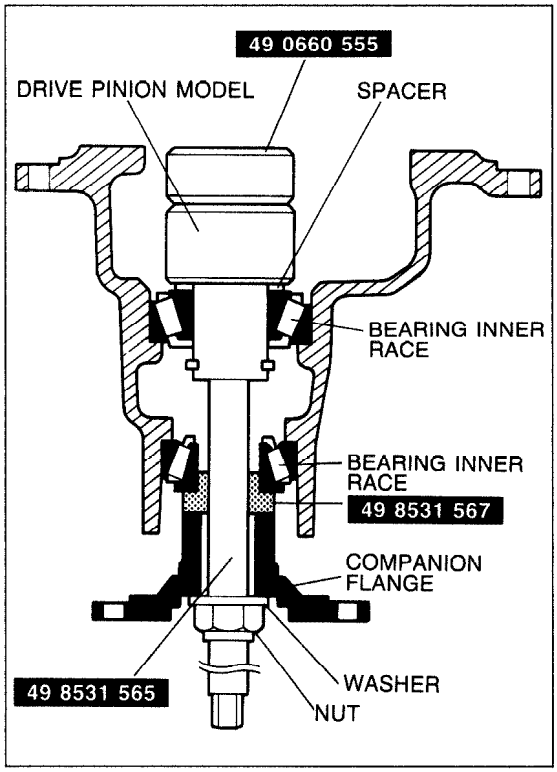

03U0MX-870

Note

- **Use the spacer that was removed.**
- **Do not install the collapsible spacer.**

a) Install the bearing inner race (rear), spacer, O-ring and **SST**.
b) Install the bearing inner race (front), companion flange, washer, and nut.
c) Tighten the nut just enough so that the **SST** can be turned by hand.

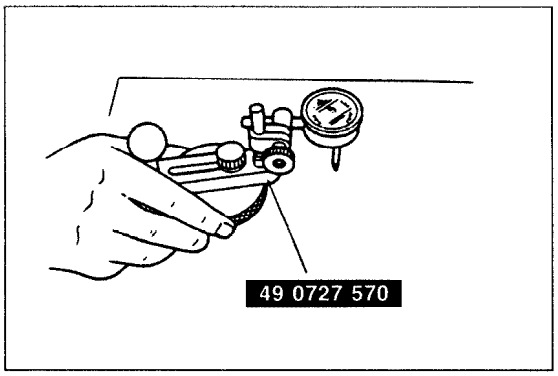

97U0MX-082

d) Place the **SST** on a surface plate and set the dial indicator to "Zero".

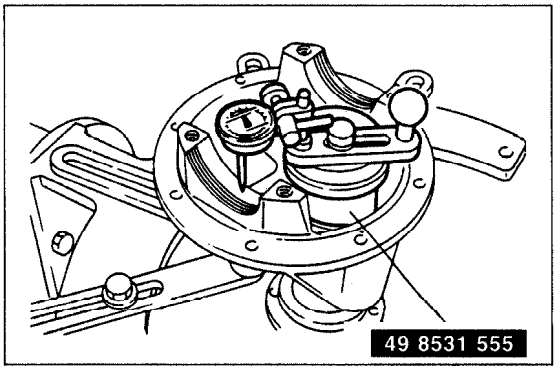

03U0MX-871

e) Place the **SST** atop the drive pinion model. Set the gauge body atop the gauge block.
f) Place the feeler of the dial indicator so that it contacts where the bearing inner race (side bearing) is installed in the carrier. Measure the lowest position on the left and right sides of the carrier.

Downloaded from www.Manualslib.com manuals search engine

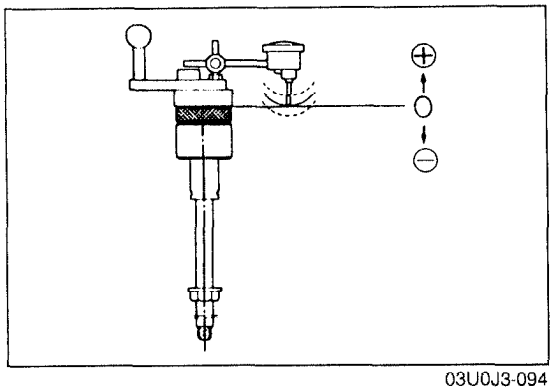

03U0J3-094

Mark	Thickness	Mark	Thickness
08	3.08mm (0.1213 in)	29	3.29mm (0.1295 in)
11	3.11mm (0.1224 in)	32	3.32mm (0.1307 in)
14	3.14mm (0.1236 in)	35	3.35mm (0.1319 in)
17	3.17mm (0.1248 in)	38	3.38mm (0.1331 in)
20	3.20mm (0.1260 in)	41	3.41mm (0.1343 in)
23	3.23mm (0.1271 in)	44	3.44mm (0.1354 in)
26	3.26mm (0.1283 in)	47	3.47mm (0.1366 in)

97U0MX-085

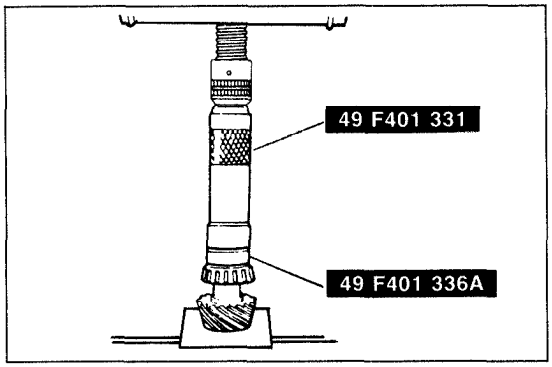

03U0J3-095

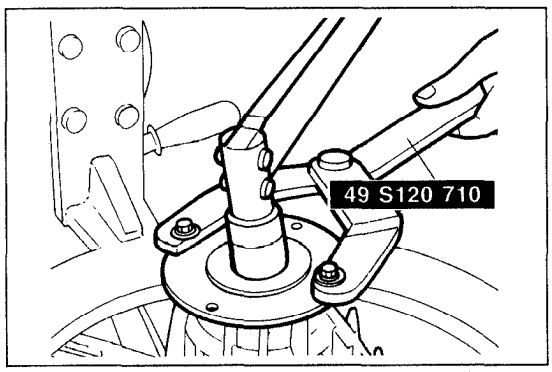

03U0MX-873

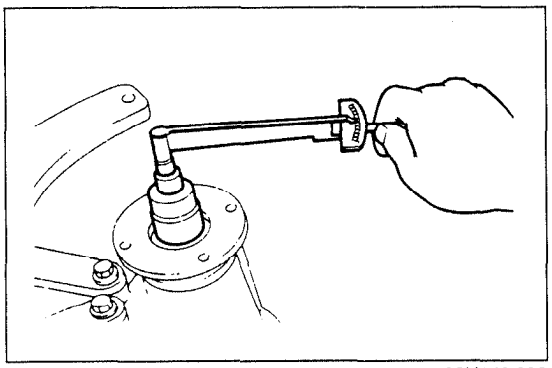

03U0J3-096

g) Average the values obtained in Step f.

Specification: 0mm (0 in)

h) If it is not within specification, adjust the pinion height by selection of a spacer.

Note
- **Spacers are available in increments of 0.03mm. Select the spacer thickness that is closest to that necessary.**

Adjustment of drive pinion preload

1. Install the spacer.

Note
- **Install the spacer selected from the pinion height adjustment above, being careful that the installation direction is correct.**
- **Press the bearing on until the force required suddenly increases.**

2. Press the bearing inner race (rear bearing) on with the **SST**.

Caution
- **Do not install the oil seal.**

3. Install the collapsible spacer.
4. Install the drive pinion assembly.
5. Install the companion flange, and tighten the flange nut.

Tightening torque: 117 N·m (12 m-kg, 86 ft-lb)

6. Turn the companion flange by hand to seat the bearing.
7. Measure the drive pinion preload.
   Adjust the preload by tightening the flange nut.

Preload:
1.00—1.56 N·m (10—16 cm-kg, 8.7—13.8 in-lb)

Tightening torque:
117—176 N·m (12—18 m-kg, 86—130 ft-lb)

If the specified preload cannot be obtained, replace the collapsible spacer with a new one and check again.

8. Remove the nut, washer, and companion flange.

Downloaded from www.Manualslib.com manuals search engine

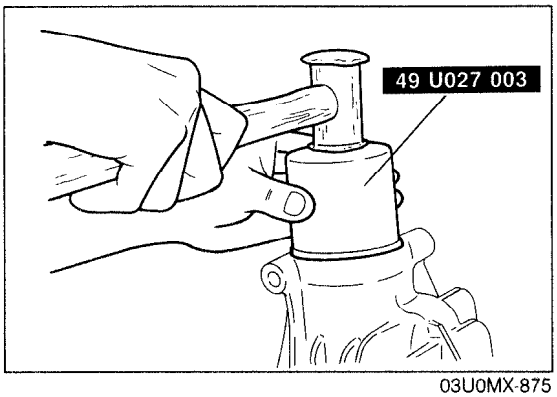

03U0MX-875

Oil seal (Companion flange)

Caution
- **Apply differential oil to the oil seal lip.**

1. Tap a new oil seal into the differential carrier with the **SST**.

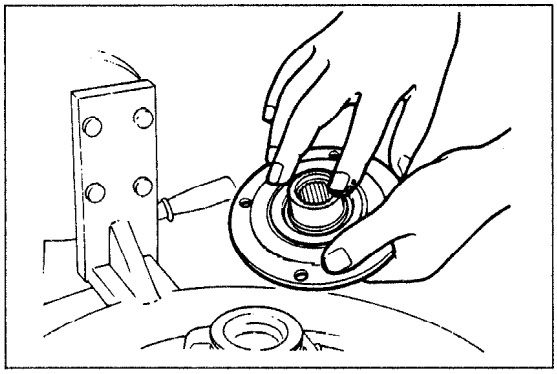
03U0MX-876

Companion flange
1. Apply a light coat of grease to the end face of the companion flange.

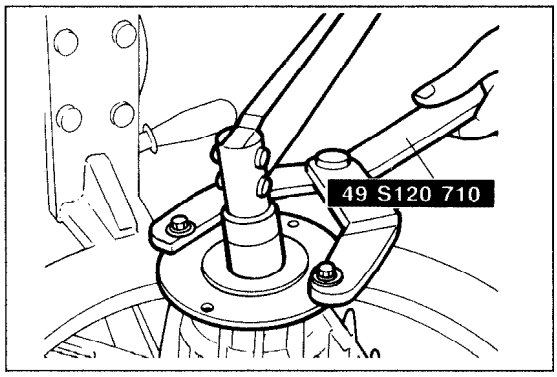

03U0J3-097

Nut (Companion flange)
1. Adjust the preload by tightening the flange nut.

Preload:
1.00—1.56 N·m (10—16 cm-kg, 8.7—13.8 in-lb)

Tightening torque:
117—176 N·m (12—18 cm-kg, 86—130 in-lb)

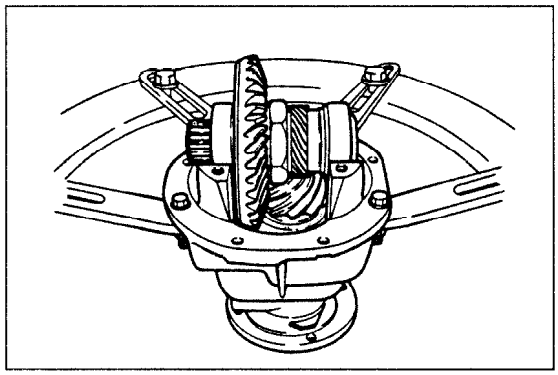
03U0J3-098

Adjustment of Backlash
1. Position the idler gear assembly in the carrier.

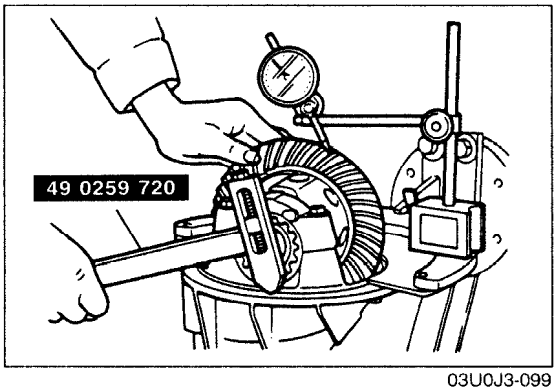

03U0J3-099

2. Install the differential bearing caps making sure that the marks on the cap and carrier agree.
3. Loosely tighten the bearing cap bolts on each side and adjust the backlash by turning the adjusting screws with the **SST**.
4. Mark the ring gear at four points at **approx. 90°** intervals on the ring gear and mount a dial indicator to the carrier so that the feeler comes in contact at a 90° angle with one of the ring gear teeth.

Downloaded from www.Manualslib.com manuals search engine

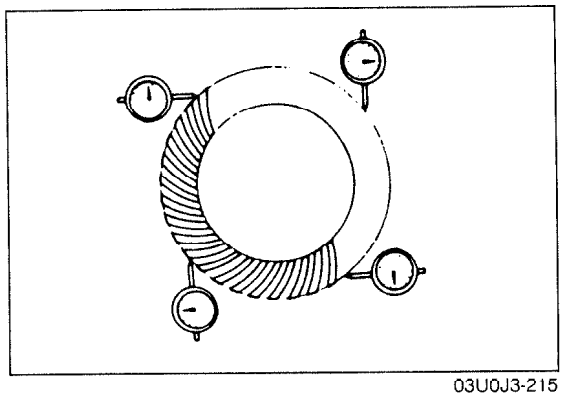

03U0J3-215

5. Check the backlash at the three other marked points, and make sure the minimum backlash is above **0.05mm (0.0020 in)** and the difference between the maximum and minimum is less than **0.07mm (0.0028 in)**.

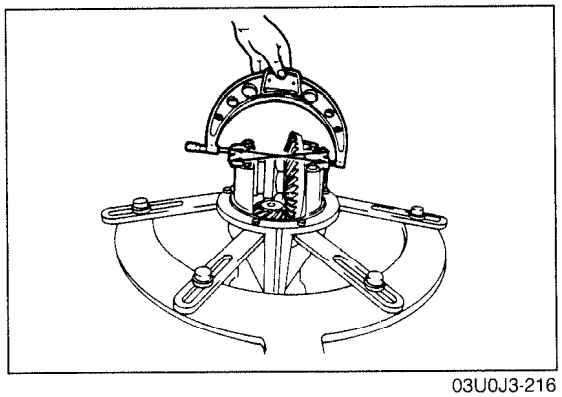

03U0J3-216

6. Tighten the adjusting screws equally until the distance between the pilot sections on the bearing caps is as specified.

Specified distance: 32mm (1.259 in)

Note
- **When adjusting the differential bearing preload, be careful not to affect the backlash of the drive pinion and ring gear.**

Tightening torque:
18—25 N·m (1.8—2.6 m-kg, 13—19 ft-lb)

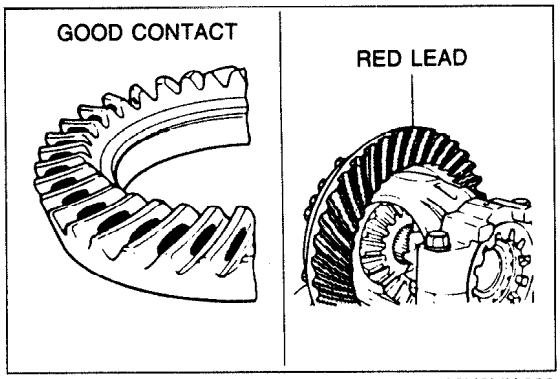

03U0MX-883

Inspection and adjustment of teeth contact

1. Coat both surfaces of 6—8 teeth of the ring gear with a uniformly thin coat of red lead.
2. While moving the ring gear back and forth by hand, rotate the drive pinion several times and check the tooth contact.
3. If the tooth contact is good, wipe off the red lead.
4. If it is not good, readjust the pinion height, and then readjust the backlash.

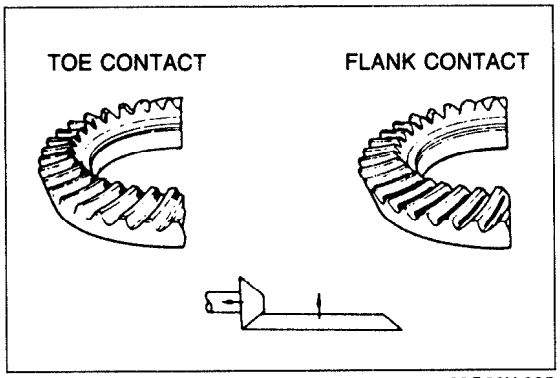

63G09X-385

(1) Toe and flank contact
Replace the spacer with a thinner one to move the drive pinion outward.

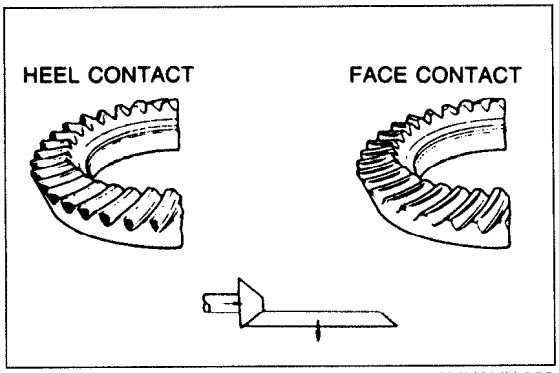

9MU0MX-068

(2) Heel and face contact
Replace the spacer with a thicker one to bring the drive pinion inward.

Downloaded from www.Manualslib.com manuals search engine

Idler Gear Assembly

1. Assemble in the reverse order of disassembly, referring to **Assembly Note**.

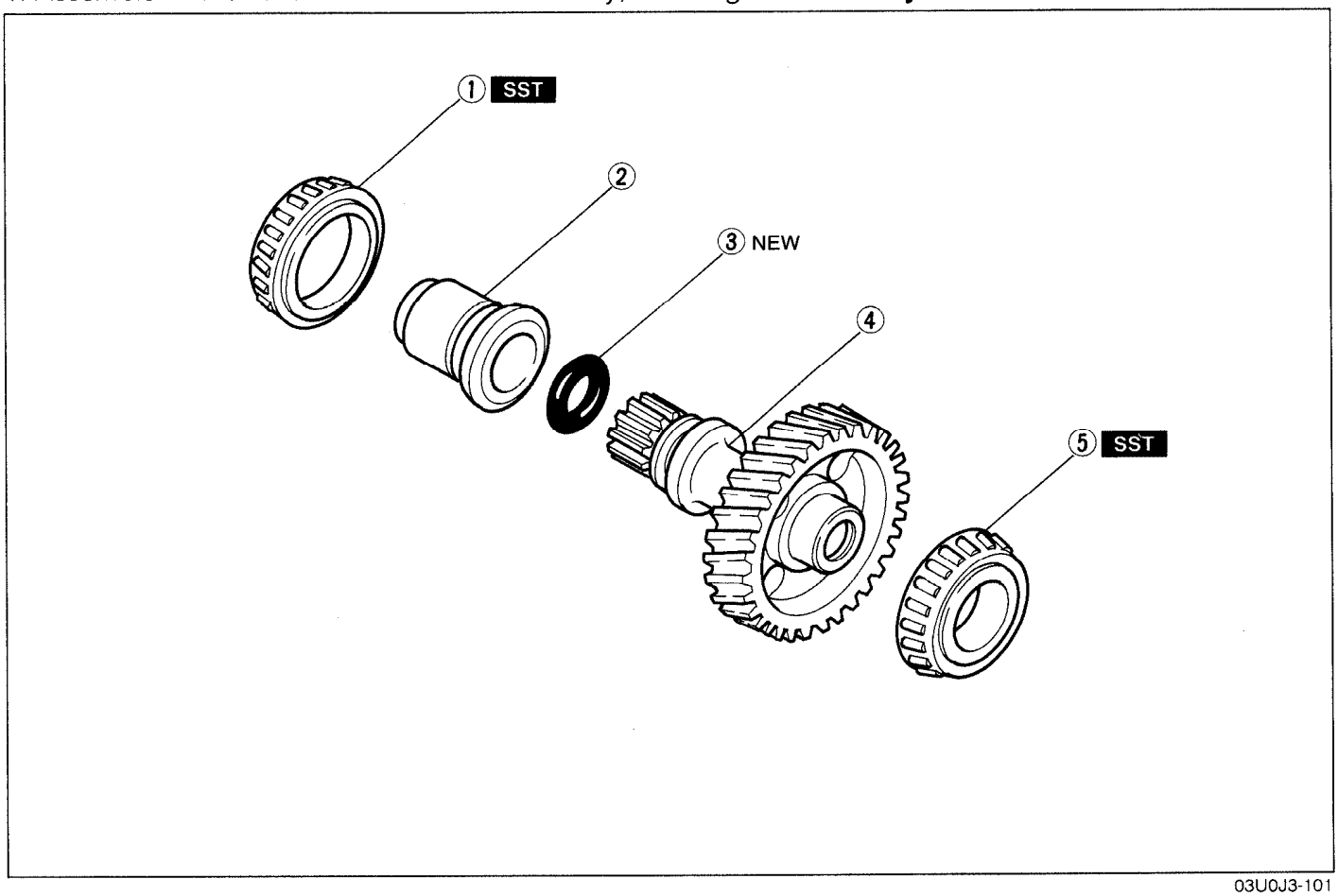

03U0J3-101

1. Bearing inner race (Joint sleeve side)
   Assembly Note..... page J3–56
2. Joint sleeve
3. O-ring
4. Idler gear
5. Bearing inner race (Idler gear side)
   Assembly Note..... page J3–56

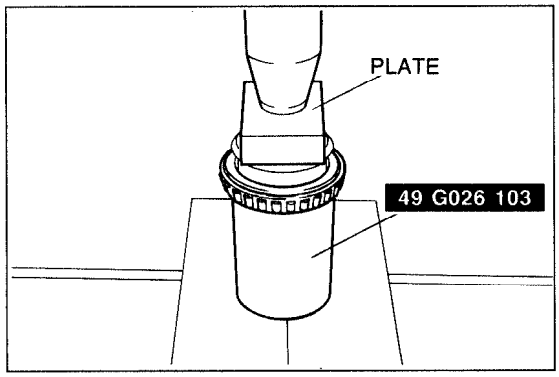

03U0J3-102

Assembly note

Bearing inner race (Joint sleeve side)

1. Install the bearing with the **SST**.

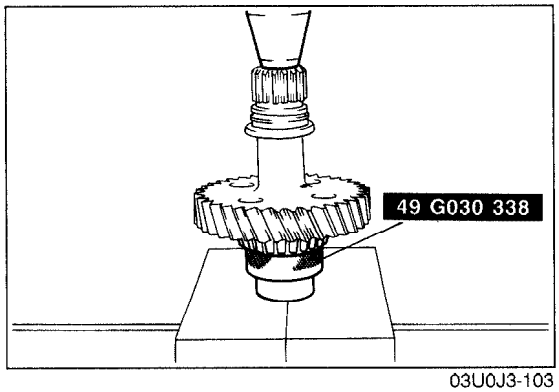

03U0J3-103

Bearing inner race (Idler gear side)

1. Install the bearing with the **SST**.

Downloaded from www.Manualslib.com manuals search engine

MEMO

Downloaded from www.Manualslib.com manuals search engine

Front and Center Differential Assembly

1. Assemble in the reverse order of disassembly, referring to **Assembly Note**.

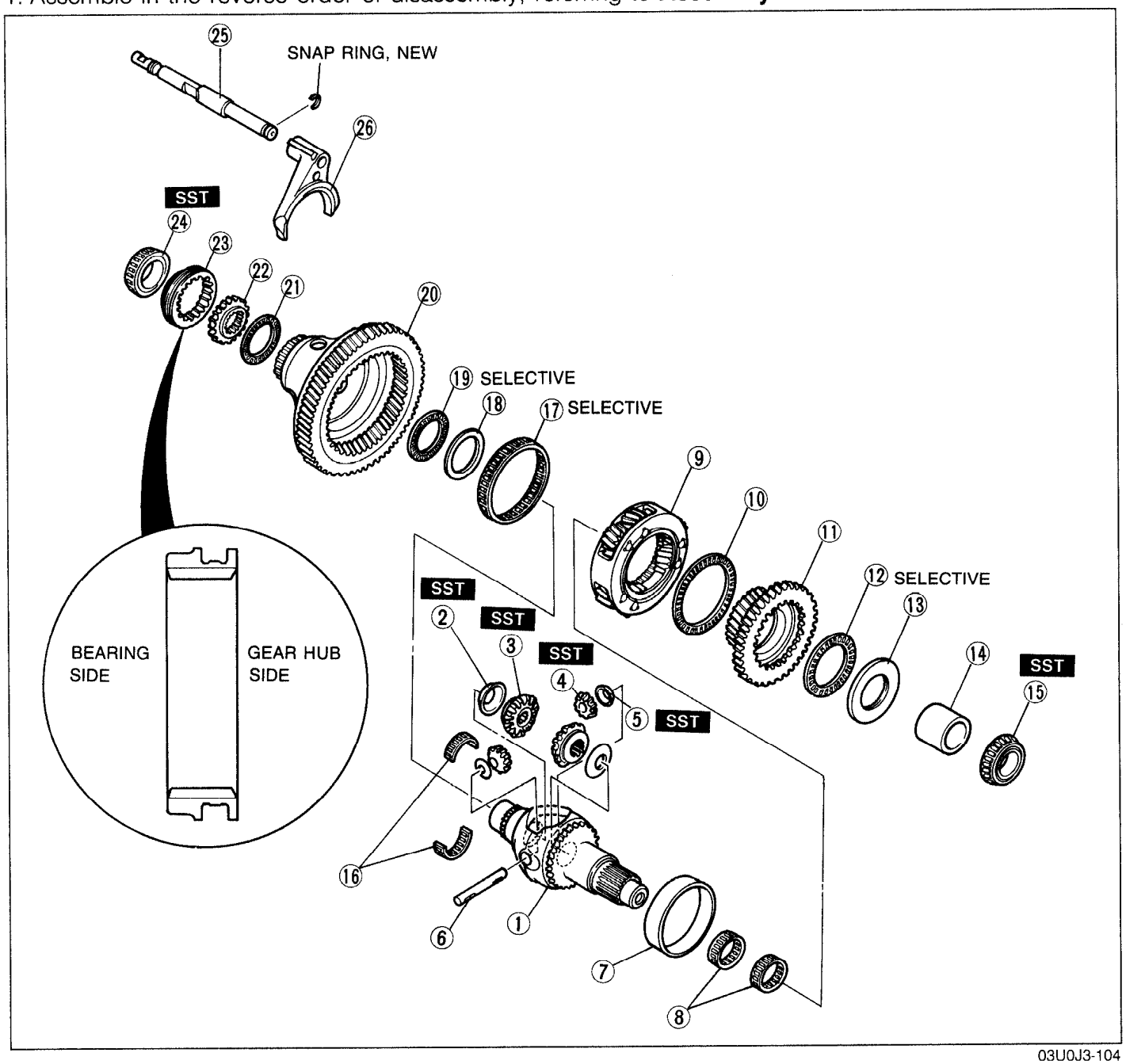

03U0J3-104

1. Front differential gear case
2. Washers
3. Side gears
   Assembly Note..... page J3–59
4. Pinion gears
   Assembly Note..... page J3–59
5. Washers
6. Pinion shaft
7. Front differential gear case sleeve
   Assembly Note..... page J3–59
8. Needle bearings
9. Planetary carrier assembly
10. Needle bearing
11. Sun gear
12. Needle bearing
13. Washer
14. Spacer
15. Bearing inner race (Sun gear side)
    Assembly Note..... page J3–61
16. Needle bearings
17. Needle bearing
18. Washer
    Assembly Note..... page J3–60
19. Needle bearing
20. Front ring gear
21. Needle bearing
22. Differential lock gear hub
23. Differential lock gear sleeve
24. Bearing inner race (Gear sleeve side)
    Assembly Note..... page J3–61
25. Center differential lock shift rod
26. Center differential lock shift fork

Downloaded from www.Manualslib.com manuals search engine

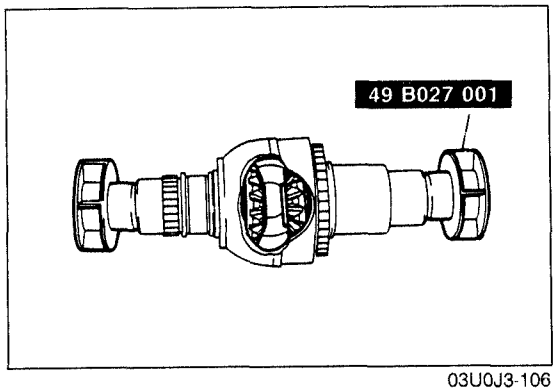

03U0J3-106

Side gears, pinion gears

1. Install the side gears and washers, and fix them with the **SST**.

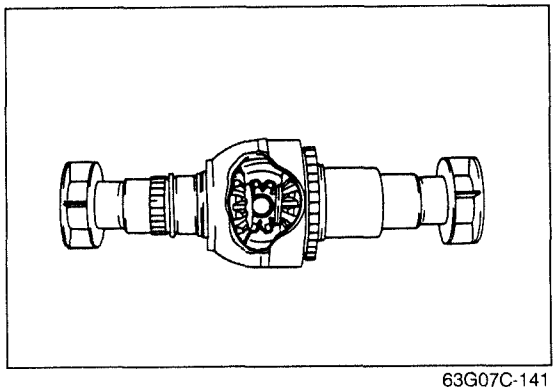

63G07C-141

2. Install a pinion gear and turn it 180°.

Note
- **Do not install the washer at this time.**

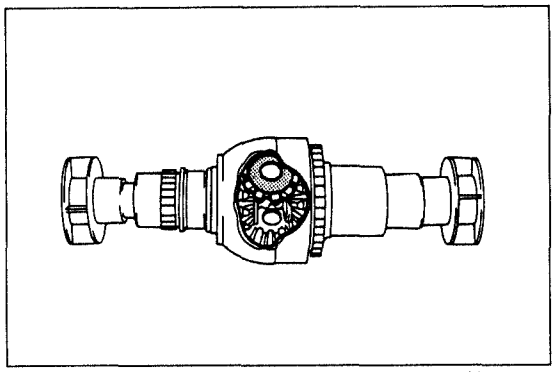

03U0J3-107

3. Install the other pinion gear and washer.
4. Turn the pinion gear and washer 150°.
5. Install the washer under the opposite pinion gear.

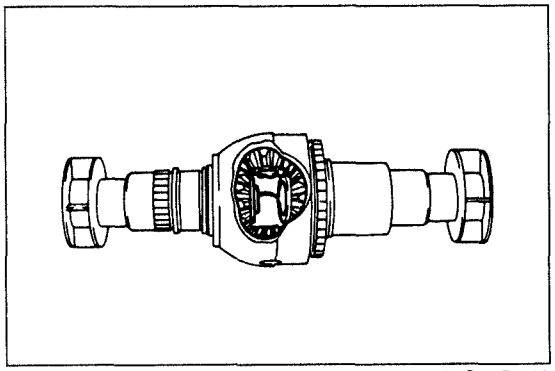

63G07C-143

6. Align the pinion shaft holes of the pinion gears with the differential gear case.

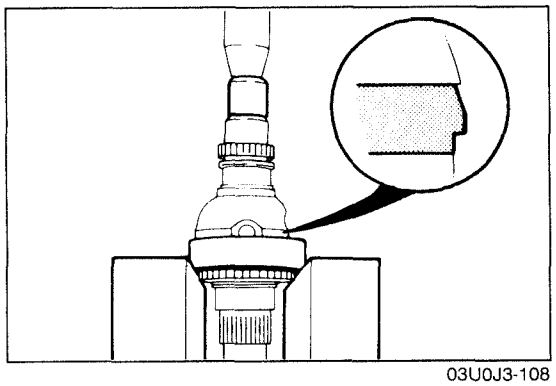

03U0J3-108

Front differential case sleeve

1. Install the front differential case sleeve with a press as shown in the figure.

Downloaded from www.Manualslib.com manuals search engine

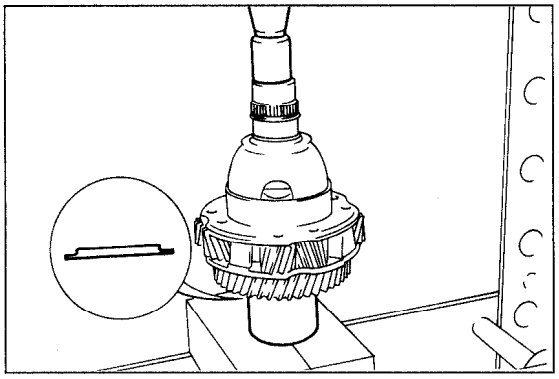

03U0J3-109

Adjustment of sun gear clearance

1. Install the washer (4.3mm) onto the gear case with the **SST**.

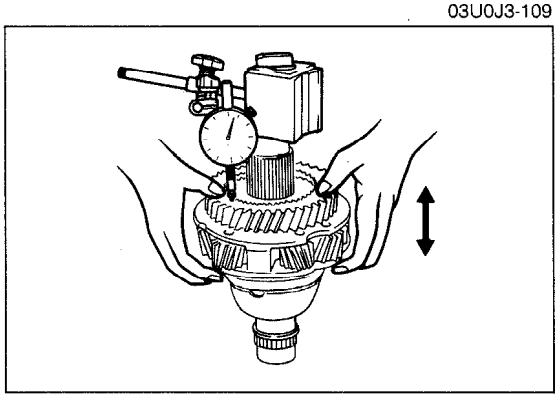

03U0J3-110

2. Set a dial indicator onto the gear case and measure the sun gear thrust clearance.

   Clearance: 0.1—0.3mm (0.0003—0.0118 in)

3. If the clearance is not within specification, select the proper washer from the chart below.

Measured clearance mm (in)	Washer thickness mm (in)
0.9—1.1 (0.0354—0.0433)	3.5 (0.137)
0.7—0.9 (0.0275—0.0354)	3.7 (0.145)
0.5—0.7 (0.0196—0.0275)	3.9 (0.153)
0.3—0.5 (0.0118—0.0196)	4.1 (0.1614)
0.1—0.3 (0.0003—0.0118)	4.3 (0.1692)

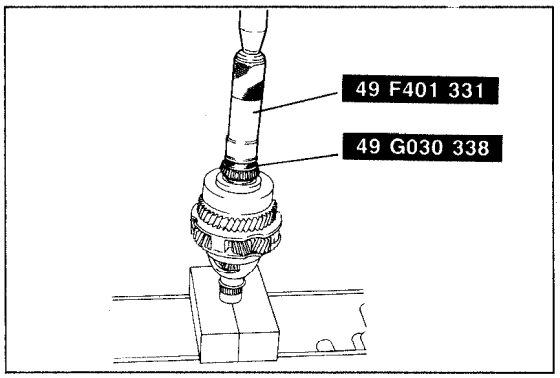

03U0J3-111

Bearing inner race (Sun gear side)

1. Install the bearing inner race with the **SST**.

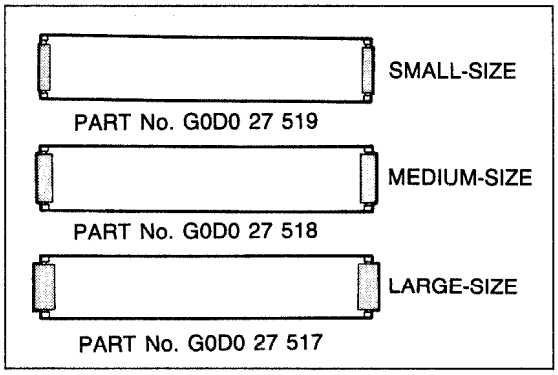

03U0J3-225

Adjustment of front differential gear case radial clearance

1. Install the front differential gear case into the ring gear case.

   Note
   - **Available gear case needle bearing part numbers.**
     Small..... G0D0 27 519
     Medium . G0D0 27 518
     Large..... G0D0 27 517

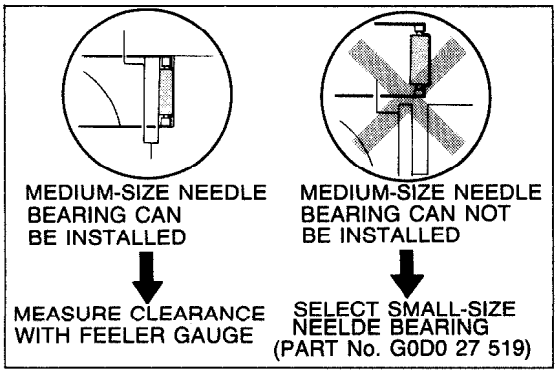

03U0J3-226

2. Verify that the medium-size gear case needle bearing can be installed.
3. If can not, install the small-size gear case needle bearing.

Downloaded from www.Manualslib.com manuals search engine

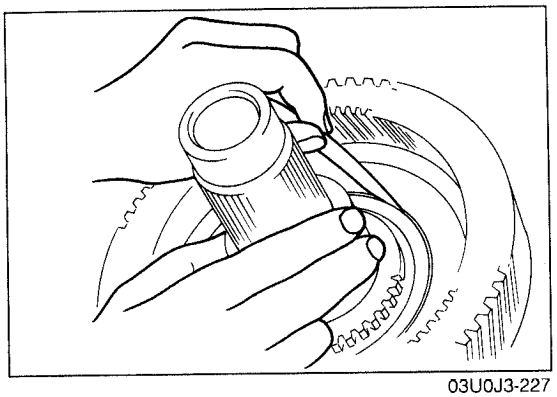

03U0J3-227

4. If the medium-size gear case needle bearing can be installed, measure the clearance between the ring gear case and the needle bearing.

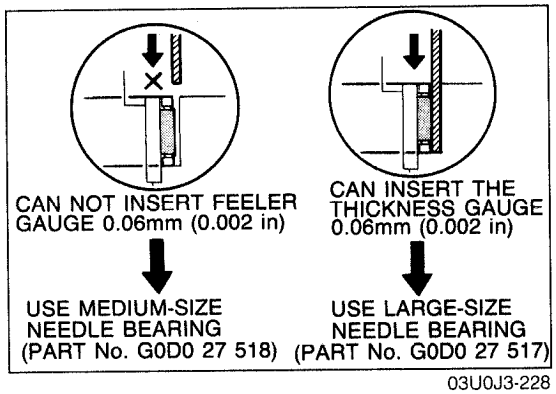

03U0J3-228

5. If the clearance exceeds 0.06mm (0.002 in), install the large-size gear case needle bearing.

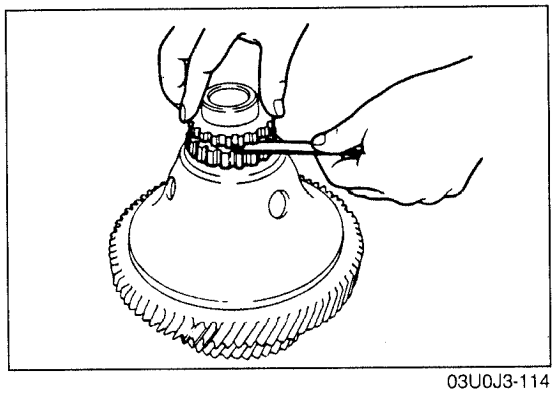

03U0J3-114

Adjustment of front ring gear clearance

1. Install the washer and front differential gear case.
2. Install the needle bearing and differential lock hub.
3. Measure the clearance between the front ring gear and needle bearing.

Clearance: 0.15—0.30mm (0.0059—0.0118 in)

4. If the clearance is not within specification, select the proper washer from the chart below.

Washer thickness mm (in)		
1.20 (0.0472)	1.35 (0.0531)	1.50 (0.0590)
1.65 (0.0649)	1.80 (0.0708)	

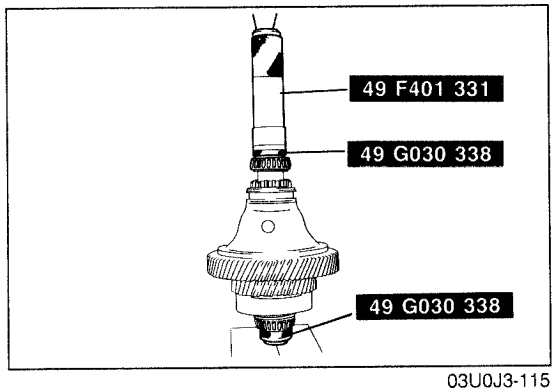

03U0J3-115

Bearing inner race (Gear sleeve side)

1. Install the bearing inner race with the **SST**.

Downloaded from www.Manualslib.com manuals search engine

Top Cover Assembly

1. Assemble in the order shown in the figure, referring to **Assembly Note**.

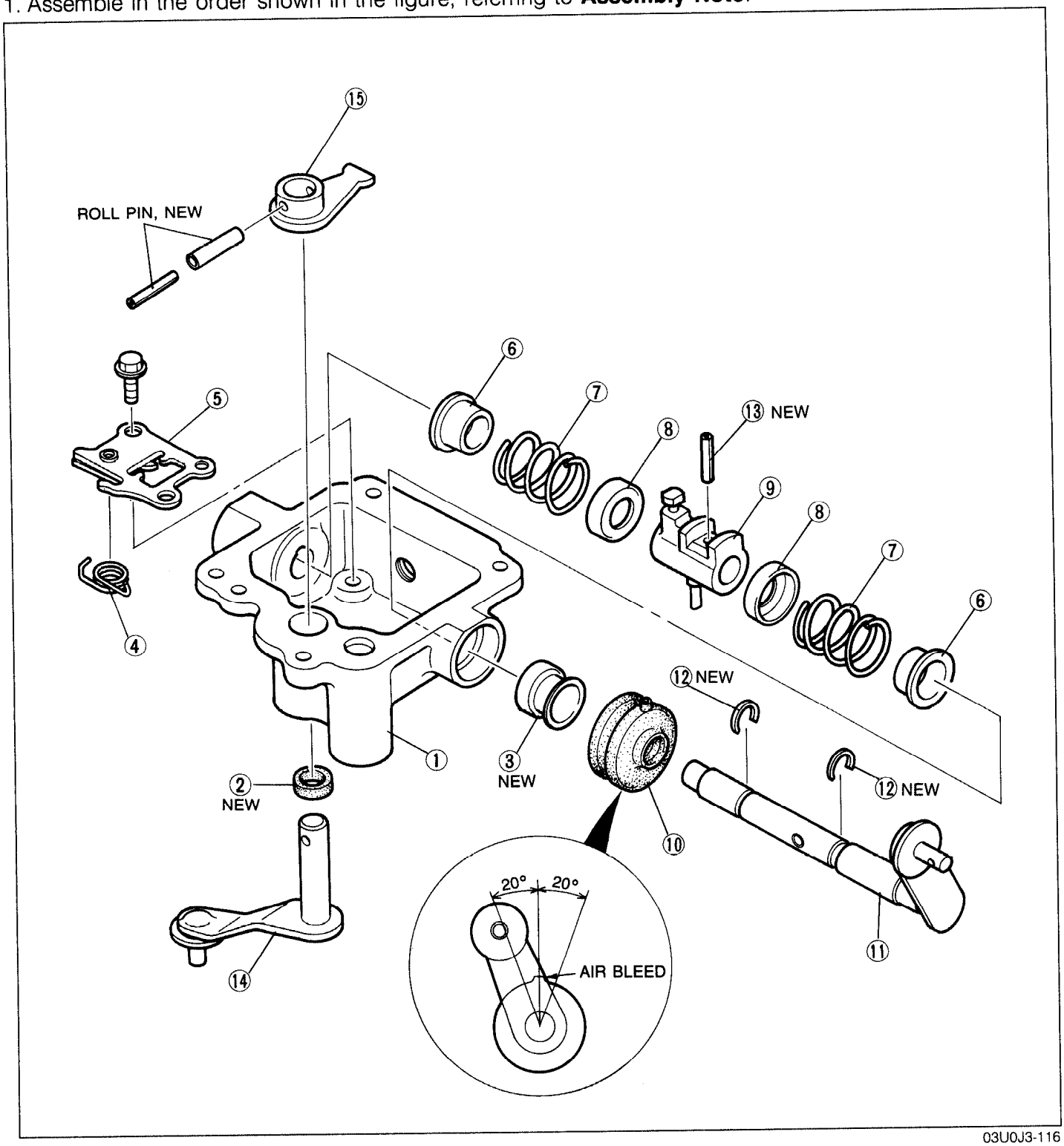

03U0J3-116

1. Top cover
2. Oil seal (Select lever side)
   Assembly Note..... page J3–63
3. Oil seal
   Assembly Note..... page J3–63
4. Reverse gate spring
5. Base plate assembly
6. Spring guides
7. Springs
   Assembly Note..... page J3–63
8. Washer
9. Inner shift lever
10. Boot
    Assembly Note..... page J3–63
11. Shift lever
    Assembly Note..... page J3–63
12. Snap rings
13. Roll pin
14. Select lever
15. Inner select lever

Downloaded from www.Manualslib.com manuals search engine

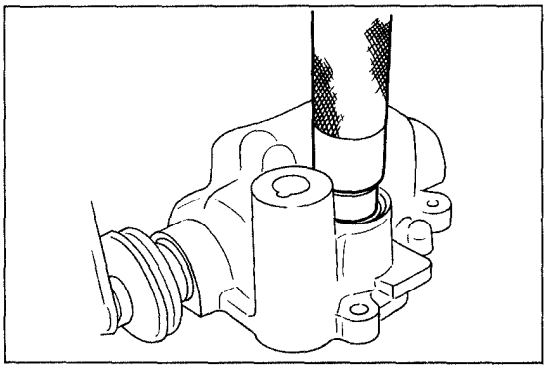

03U0J3-117

Assembly note
Oil seal (Select lever side)

Caution
- **Apply transaxle oil to outer circumference of the oil seal.**

1. Install the new oil seal with a suitable pipe.

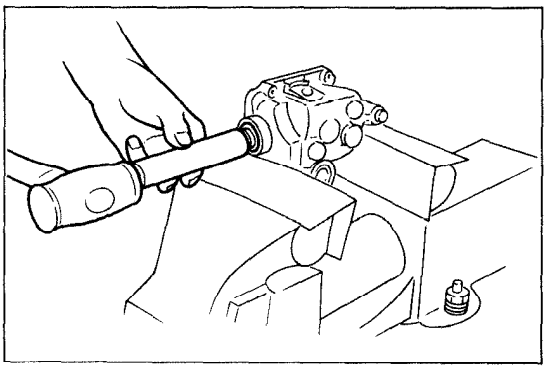

03U0J3-118

Oil seal

Caution
- **Apply transaxle oil to the oil seal lip.**

1. Install the new oil seal with a suitable pipe.

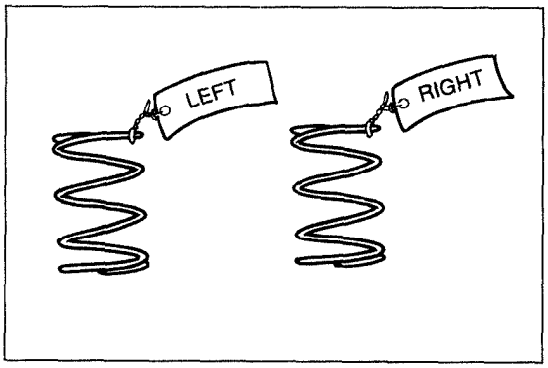

03U0J3-119

Springs

Caution
- **Do not misinstall the springs.**

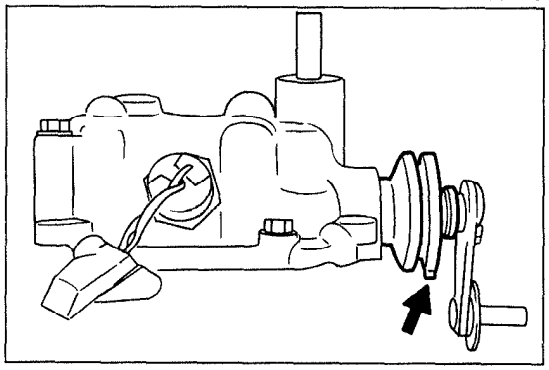

03U0J3-120

Boot

Caution
- **Install the boot with the air bleed downward as shown in the figure.**

1. Install the boot.

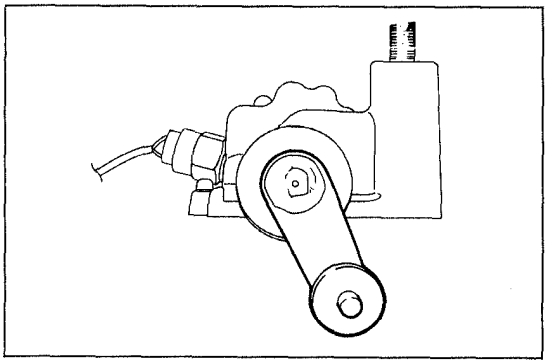

03U0J3-121

Shift lever
1. Install the shift lever as shown in the figure.

Downloaded from www.Manualslib.com manuals search engine

Secondary Shaft Assembly

1. Assemble in the order shown in the figure, referring to **Assembly Note**.

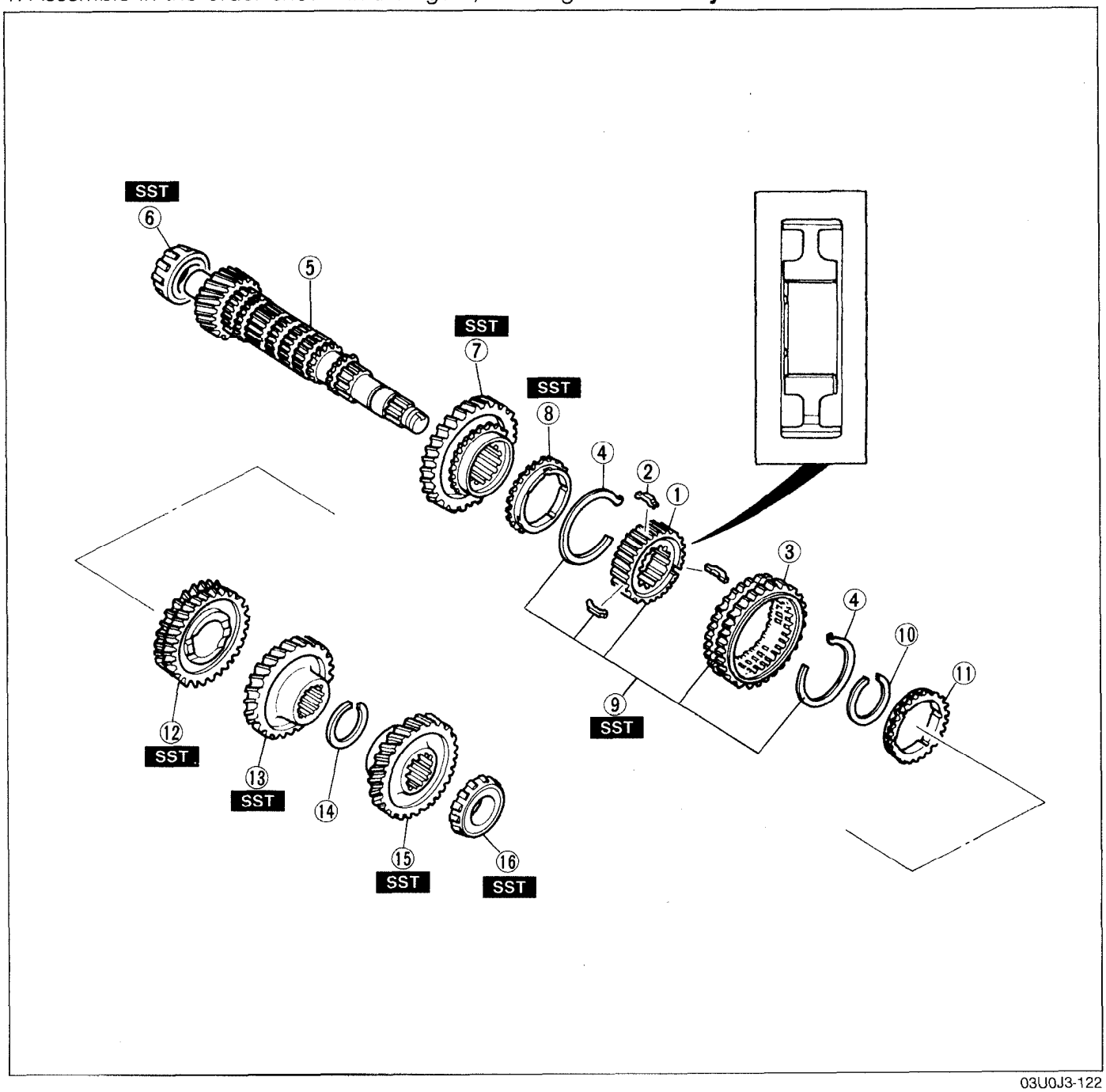

03U0J3-122

1. Clutch hub
   Assembly Note..... page J3–48
2. Synchronizer keys
3. Clutch hub sleeve
4. Synchronizer springs
5. Secondary shaft
6. Bearing inner race (Secondary shaft end)
   Assembly Note..... page J3–65
7. 1st gear
   Assembly Note..... page J3–65
8. Synchronizer ring (1st)
   Assembly Note..... page J3–65
9. Clutch hub assembly (1st/2nd)
   Assembly Note..... page J3–48
10. Retaining ring
11. Synchronizer ring (2nd)
    Assembly Note..... page J3–65
12. 2nd gear
    Assembly Note..... page J3–65
13. Secondary 3rd gear
    Assembly Note..... page J3–65
14. Retaining ring
15. Secondary 4th gear
    Assembly Note..... page J3–65
16. Bearing inner race
    Assembly Note..... page J3–65

Downloaded from www.Manualslib.com manuals search engine

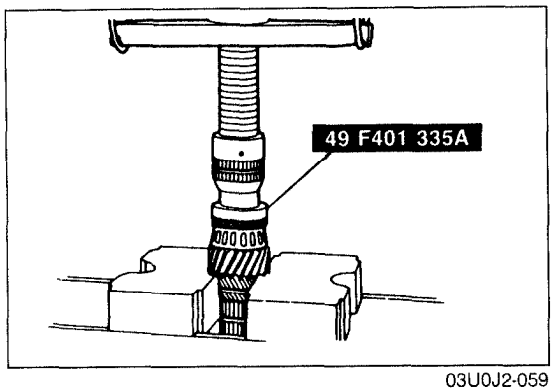

03U0J2-059

Bearing inner race (Secondary shaft end)

1. Install the new bearing inner race with the **SST**.

Note
- **Press to 19,620 N (2,000 kg, 4,400 lb).**

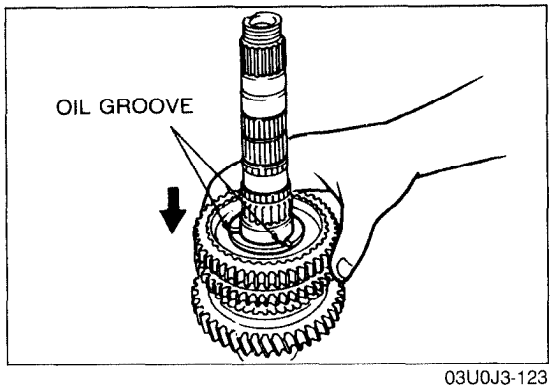

03U0J3-123

1st gear, synchronizer ring (1st) and clutch hub assembly (1st/2nd)

Note
- **Align the synchronizer ring, grooves and clutch housing hub keys when installing.**

1. Assemble the 1st gear, synchronizer ring (1st), and clutch hub assembly (1st/2nd), as shown in the figure.

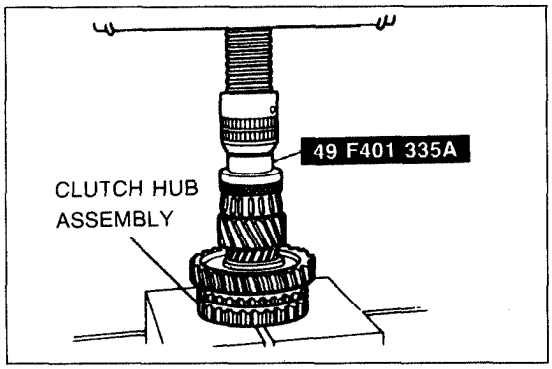

03U0J2-061

2. Press the clutch hub assembly (1st/2nd) on with the **SST**.

Note
- **Press to 19,620 N (2,000 kg, 4,400 lb).**

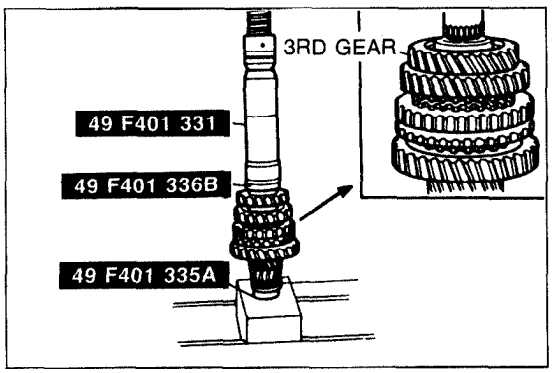

03U0J2-062

Synchronizer ring (2nd), 2nd gear and secondary 3rd gear

1. Install the synchronizer ring (2nd) and 2nd gear.
2. Install the secondary 3rd gear with the **SST**.

Note
- **Press to 19,620 N (2,000 kg, 4,400 lb).**

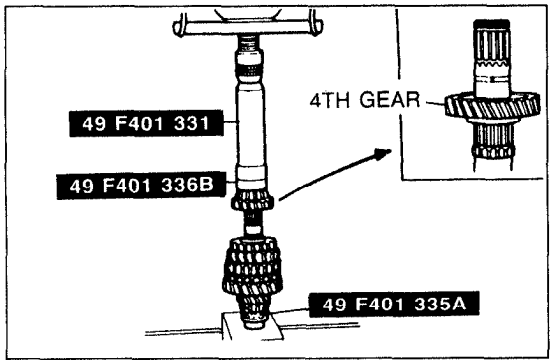

03U0J3-124

Secondary 4th gear and bearing inner race

1. Install the secondary 4th gear and new bearing inner race.

Note
- **Press to 19,620 N (2,000 kg, 4,400 lb).**

Downloaded from www.Manualslib.com manuals search engine

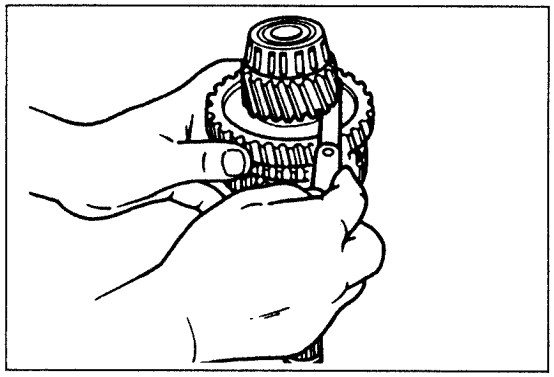

03U0J3-224

2. Measure the clearance between the 1st gear and differential drive gear.

   Clearance: 0.05—0.28mm (0.002—0.011 in)
   Maximum : 0.33mm (0.013 in)

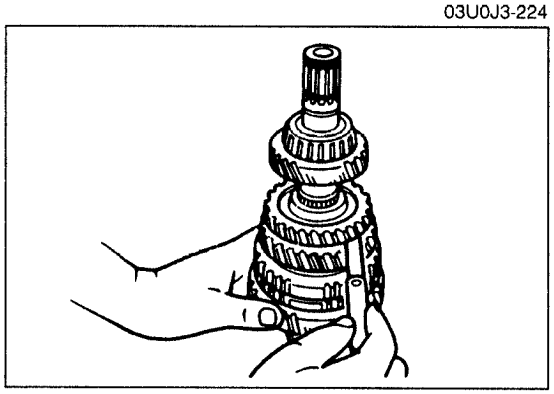

03U0J2-065

3. Measure the clearance between the 2nd gear and secondary 3rd gear.

   Clearance: 0.175—0.455mm (0.0069—0.0179 in)
   Maximum : 0.505mm (0.0199 in)

4. If not as specified, reassemble the secondary shaft assembly.

Downloaded from www.Manualslib.com manuals search engine

Primary Shaft Assembly

1. Assemble in the order shown in the figure, referring to **Assembly Note**.

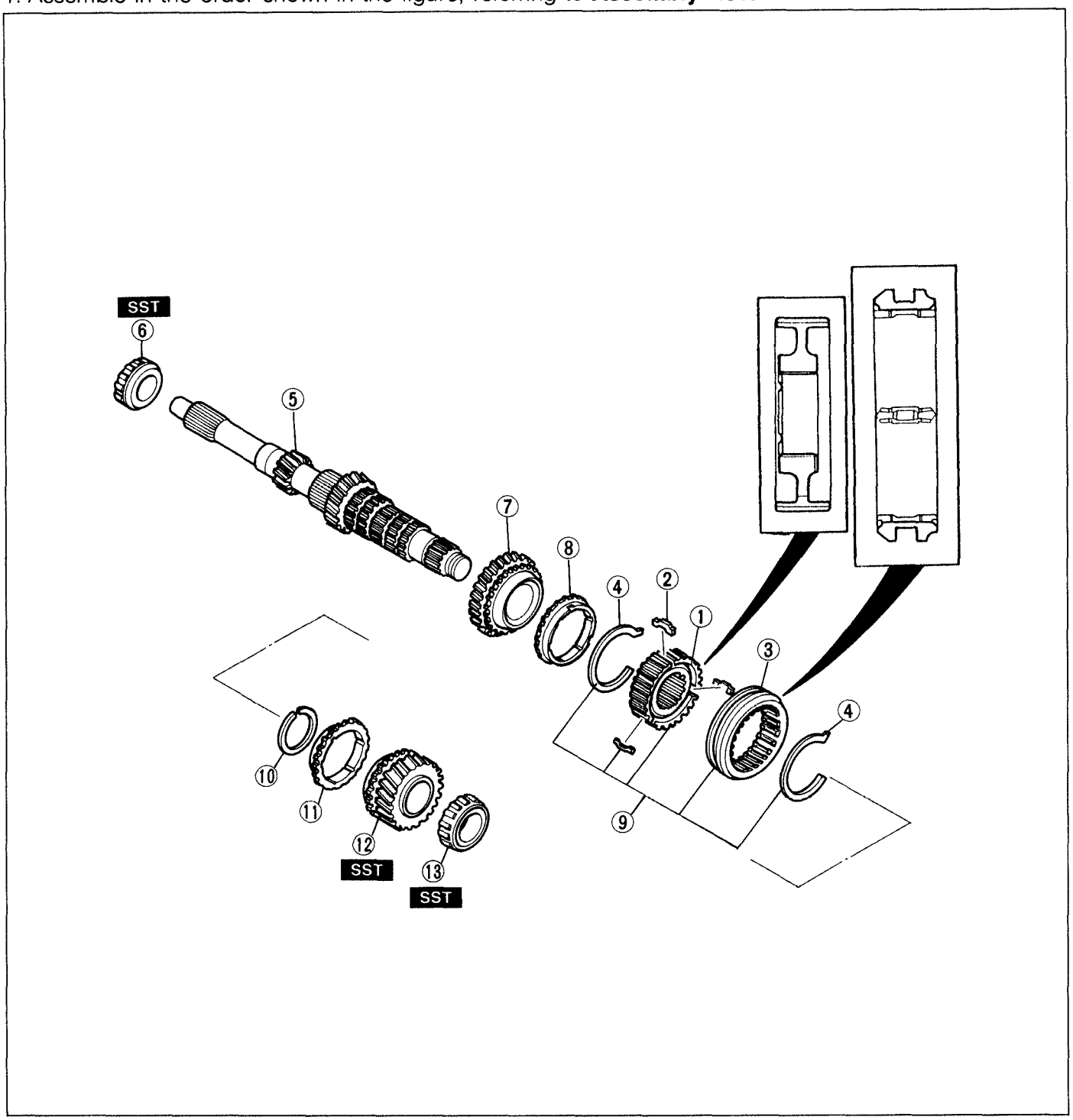

03U0J3-125

1. Clutch hub
   Assembly Note..... page J3–48
2. Synchronizer keys
3. Clutch hub sleeve (Reverse gear)
4. Synchronizer springs
5. Primary shaft
6. Bearing inner race (Primary shaft end)
   Assembly Note..... page J3–68
7. 3rd gear
   Assembly Note..... page J3–68
8. Synchronizer ring (3rd)
   Assembly Note..... page J3–68
9. Clutch hub assembly (3rd/4th)
   Assembly Note..... page J3–48
10. Retaining ring
11. Synchronizer ring (4th)
    Assembly Note..... page J3–68
12. 4th gear
    Assembly Note..... page J3–68
13. Bearing inner race
    Assembly Note..... page J3–68

Downloaded from www.Manualslib.com manuals search engine

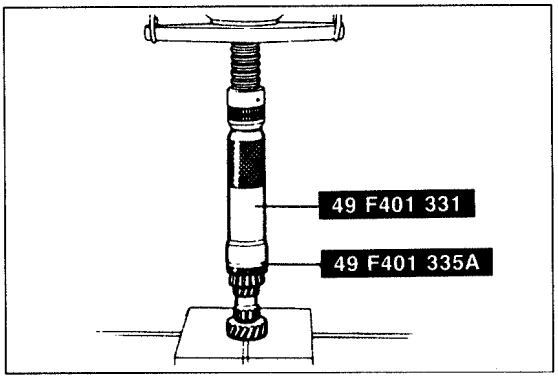

03U0J2-053

Bearing inner race (Primary shaft end)

1. Install the new bearing inner race with the **SST**.

Note
- **Press to 19,620 N (2,000 kg, 4,400 lb).**

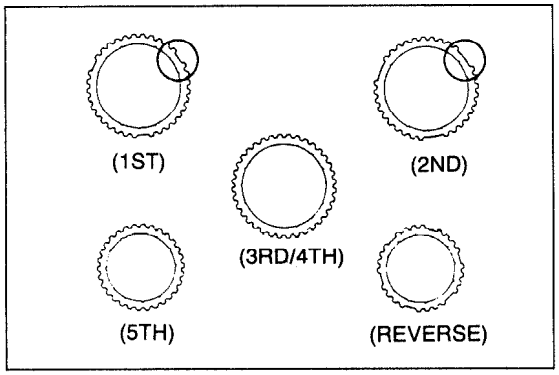

03U0J3-126

3rd gear, synchronizer ring (3rd) and clutch hub assembly (3rd/4th)

Note
- **The size of the 1st, 2nd, 3rd, and 4th synchronizer rings are the same. Be careful when installing them. The 2nd gear ring has the larger cut-out as shown in the illustration.**
- **Align the synchronizer ring grooves and clutch housing hub keys when installing.**

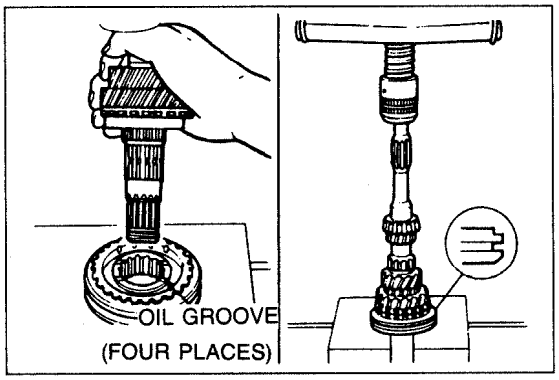

03U0J2-055

1. Install the 3rd gear, synchronizer ring (3rd), and clutch hub assembly (3rd/4th) with the **SST**.

Note
- **Press to 19,620 N (2,000 kg, 4,400 lb).**

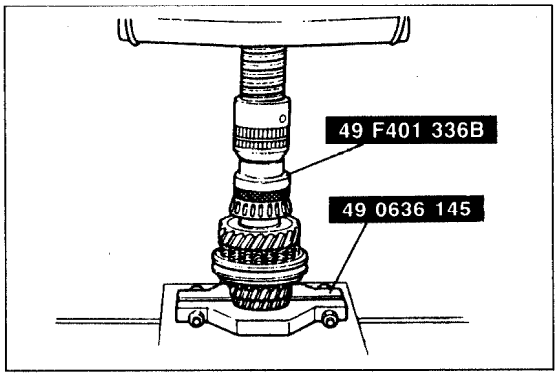

03U0J2-056

Synchronizer ring (4th), 4th gear, and bearing inner race

1. Install the synchronizer ring (4th), 4th gear, and bearing inner race with the **SST**.

Note
- **Press to 19,620 N (2,000 kg, 4,400 lb).**

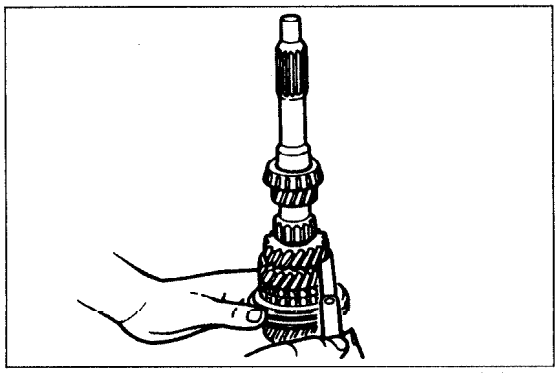
03U0J2-057

2. Measure the clearance between the 3rd gear and 2nd gear.

Clearance: 0.05—0.20mm (0.002—0.008 in)
Maximum : 0.25mm (0.010 in)

Downloaded from www.Manualslib.com manuals search engine

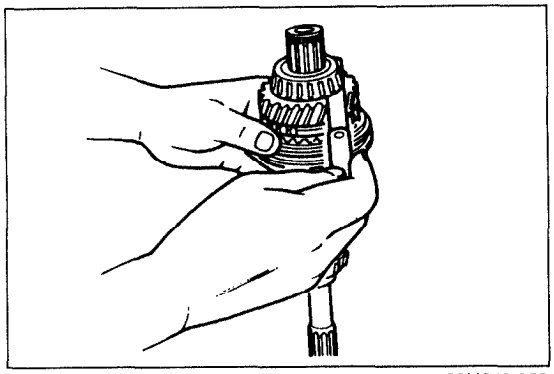

03U0J2-058

3. Measure the clearance between the 4th gear and bearing inner race.

   Clearance: 0.165—0.365mm (0.0064—0.0144 in)
   Maximum : 0.415mm (0.0163 in)

4. If not as specified, reassemble the primary shaft assembly.

Downloaded from www.Manualslib.com manuals search engine

Clutch Housing and Transaxle Case Components

1. Select the adjustment shim(s), referring to **Bearing Preload Adjustment**.
2. Assemble in the order shown in the figure, referring to **Assembly Note**.

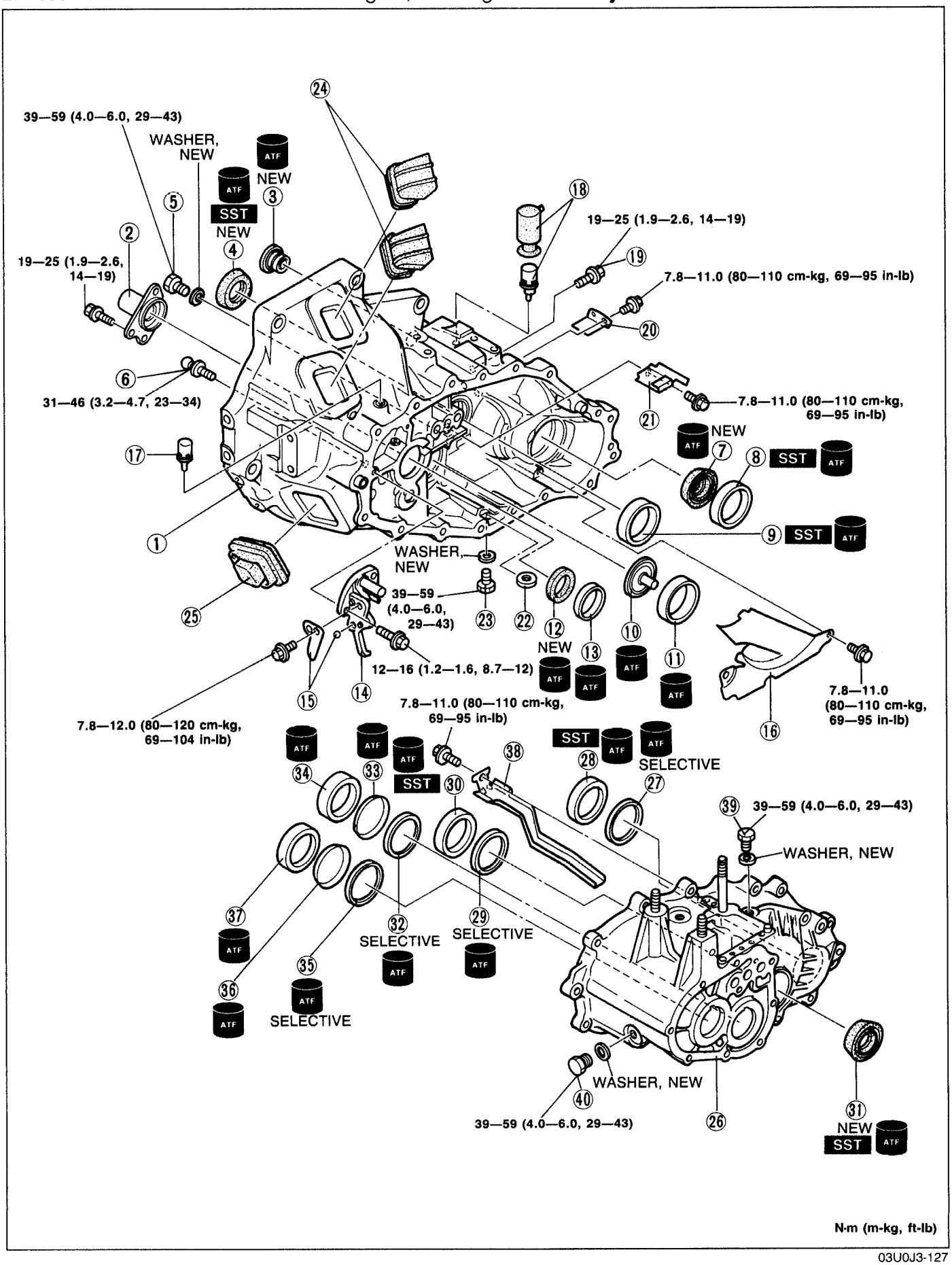

03U0J3-127

Downloaded from www.Manualslib.com manuals search engine

1. Clutch housing
2. Front cover
3. Oil seal
4. Oil seal
5. Plug
6. Pivot pin
7. Oil seal
8. Bearing outer race (Idler sear)
   Assembly Note..... page J3–78
9. Bearing outer race
   (Front and center differential)
   Assembly Note..... page J3–78
10. Funnel
11. Bearing outer race
12. Oil seal
13. Bearing outer race
14. Reverse lever support
15. Lever set spring and steel ball
16. Baffle
17. Air breather
18. Breather dust boot and air breather
19. Bolt
20. Baffle
21. Baffle
22. Magnet
23. Plug
24. Ventilator covers
25. Dust cover
26. Transaxle case
27. Adjustment shim
28. Bearing outer race
29. Adjustment shim
30. Bearing outer race
31. Oil seal (Front and center differential)
    Assembly Note..... page J3–78
32. Adjustment shim
33. Diaphragm spring
    Assembly Note..... page J3–79
34. Bearing outer race
35. Adjustment shim
36. Diaphragm sprin g
    Assembly Note..... page J3–79
37. Bearing outer race
38. Oil guide
39. Plug
40. Plug

03U0J3-128

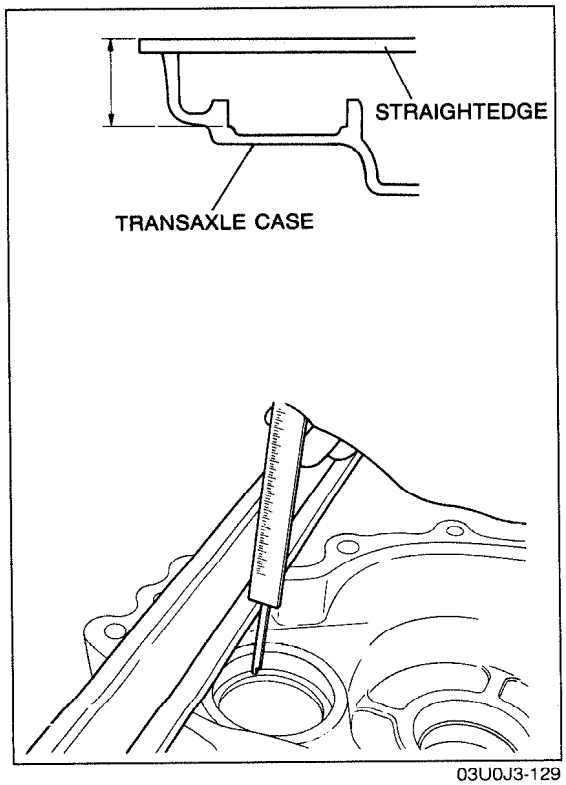

03U0J3-129

Idler gear adjustment shim selection

Note
- **Measure at three locations and average the reading.**

1. Place a straightedge on the transaxle case.
2. Measure the depth on the bearing outer race bore.

Downloaded from www.Manualslib.com manuals search engine

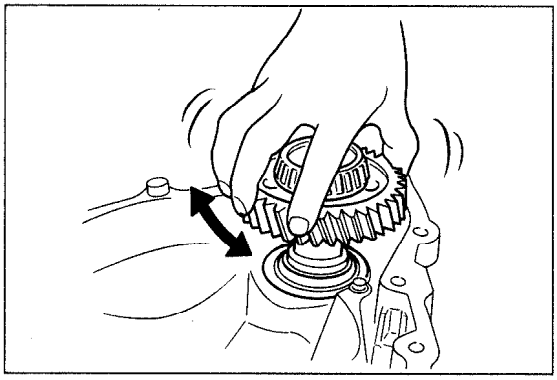

03U0J3-130

3. Set the idler gear assembly into the clutch housing.
4. Turn the idler gear assembly to seat the bearing.
5. Install the bearing outer race to the idler gear assembly.

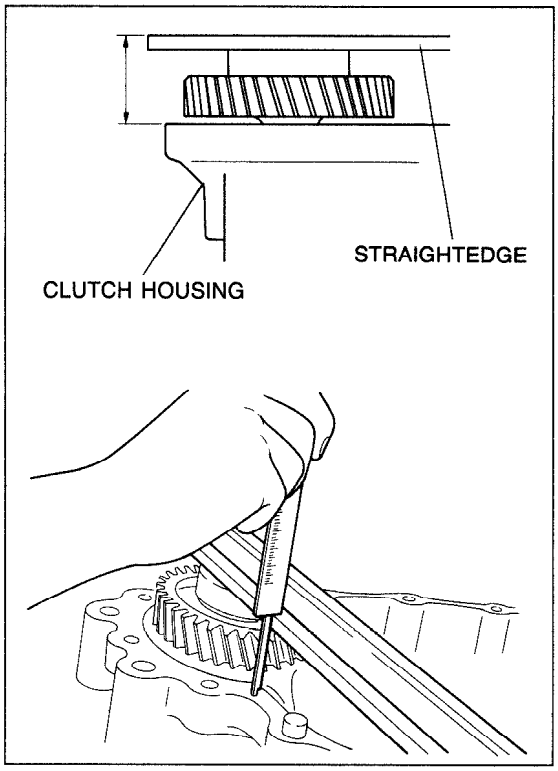

03U0J3-131

6. Measure from the top of the bearing outer race to the clutch housing.

Adjust shim thickness	mm (in)
0.10 (0.003)	0.20 (0.008)
0.25 (0.010)	0.30 (0.012)
0.35 (0.014)	0.40 (0.016)
0.45 (0.018)	0.50 (0.020)
0.55 (0.022)	0.60 (0.024)
0.65 (0.026)	0.70 (0.028)
0.75 (0.030)	0.80 (0.032)
0.85 (0.034)	0.90 (0.035)
0.95 (0.037)	1.00 (0.039)
1.05 (0.041)	1.10 (0.043)
1.15 (0.045)	1.20 (0.047)

03U0J3-132

Caution

- **The number of shims used must not exceed two.**

7. Select the shim as follows.
   (a) Subtract the bearing height (Step 6) from the depth of the bearing bore (Step 2).
   (b) Add 0.17mm (0.0067 in) to (a).
   (c) Add 0.22mm (0.0087 in) to (a).
   (d) Select the shim in the range between (b) and (c) from the table.

Downloaded from www.Manualslib.com manuals search engine

Bearing preload adjustment

Adjust the bearing preload of the primary shaft, secondary shaft, and front and center differential by selecting and installing the proper adjustment shim(s).

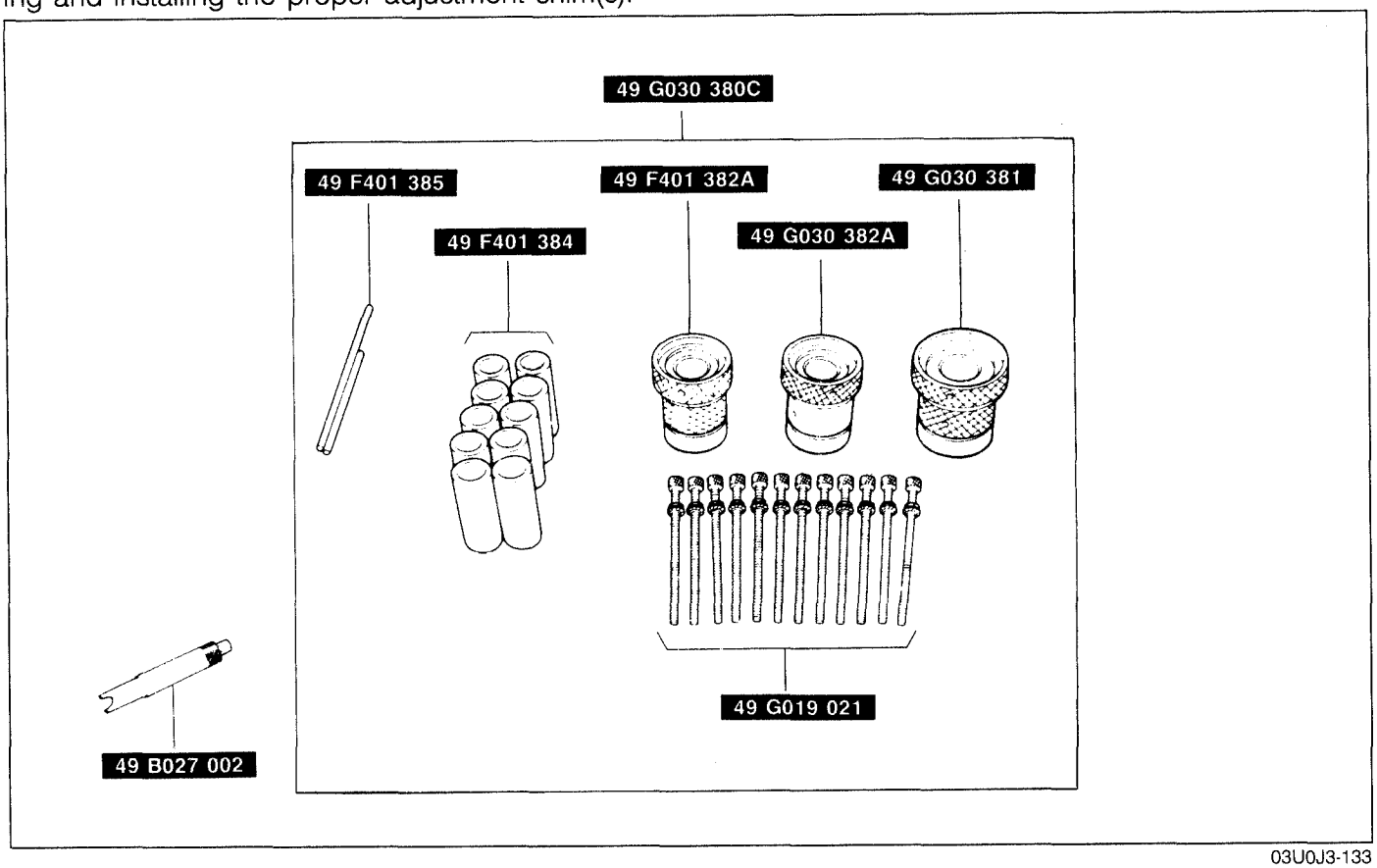

03U0J3-133

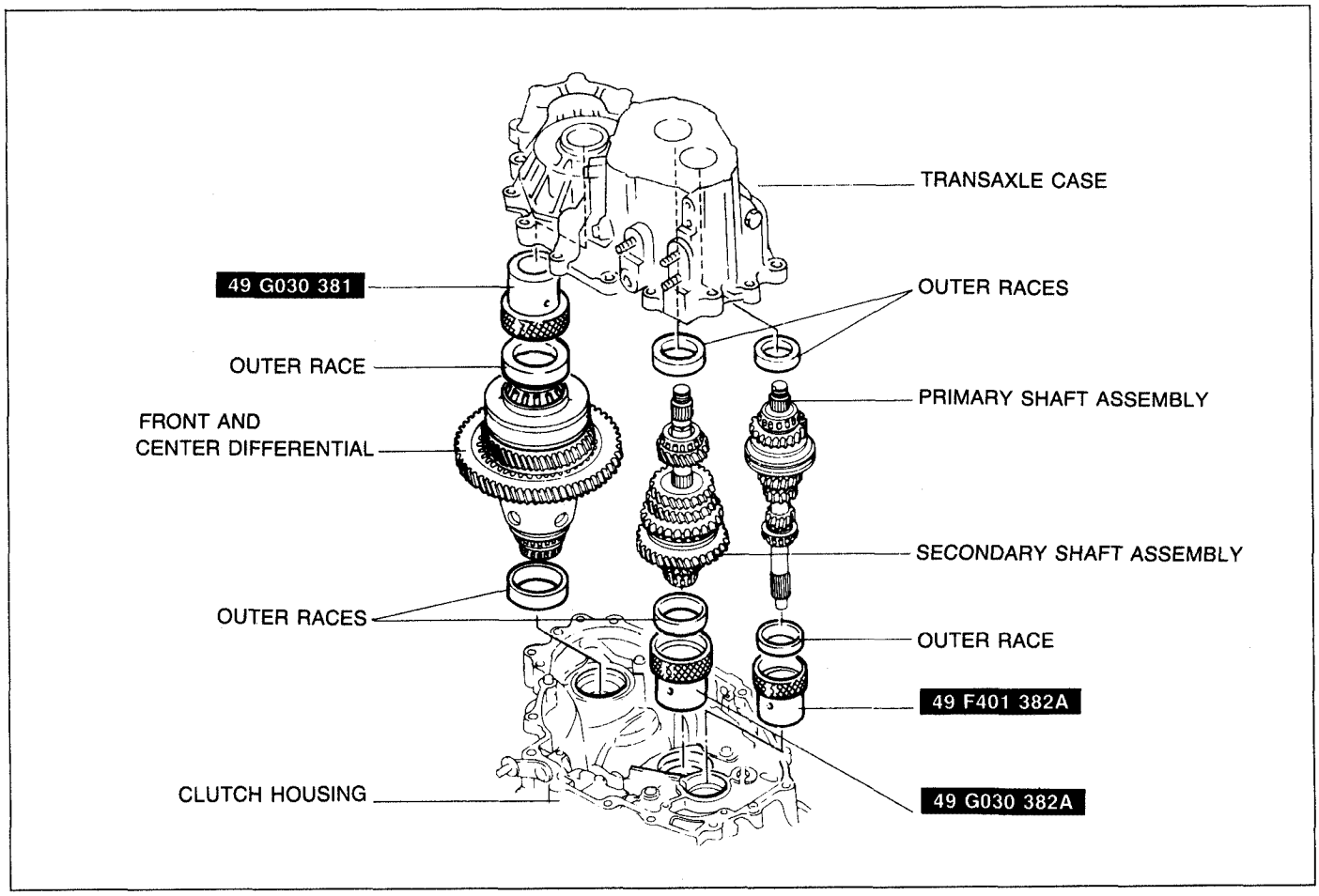

Downloaded from www.Manualslib.com manuals search engine

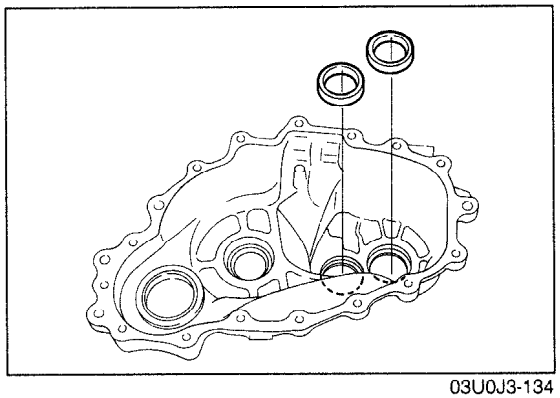

03U0J3-134

Primary and secondary shaft gear

1. Install the primary and secondary shaft bearing outer races into the transaxle case (shims removed).

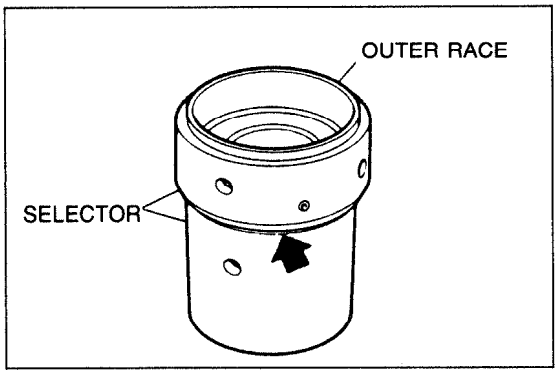

03U0J3-135

2. As shown in the figure, put the outer races into the **SST**.

Note
- **Turn the selector to eliminate the gap indicated by the arrow in the figure.**

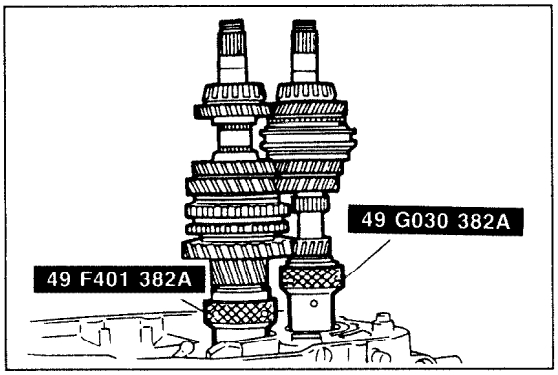

03U0J3-136

3. Set the **SST** (selectors) in place.
4. Mount the primary and secondary shaft gear assemblies onto the **SST** (selectors).

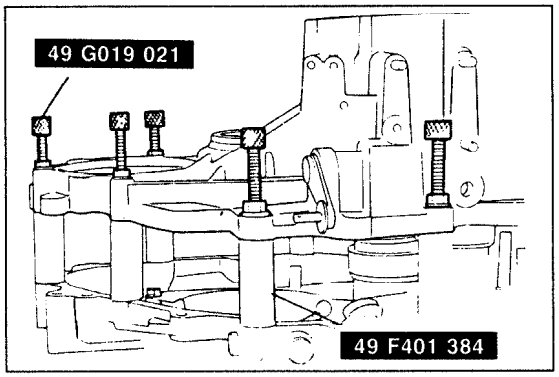

03U0J3-137

5. Set the **SST** (collars) between the transaxle case and the clutch housing, and install the **SST** (bolts), and tighten to the specified torque.

Tightening torque:
37—52 N·m (3.8—5.3 m-kg, 27—38 ft-lb)

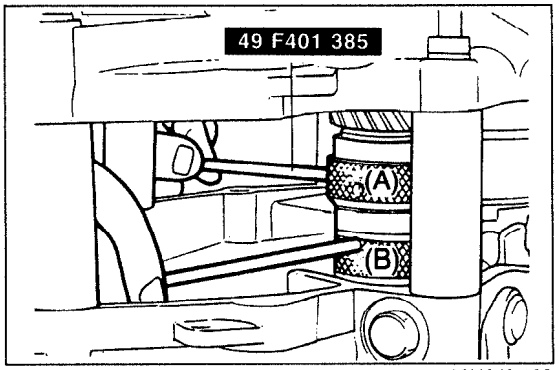

03U0J3-138

6. To seat the bearings, mount the **SST** (bar) on parts (A) and (B) of the **SST** (selectors), and turn the selector so the gap is enlarged.
Move the bars by hand until the selector can no longer be turned, and then turn it in the reverse direction until the gap is eliminated.

Downloaded from www.Manualslib.com manuals search engine

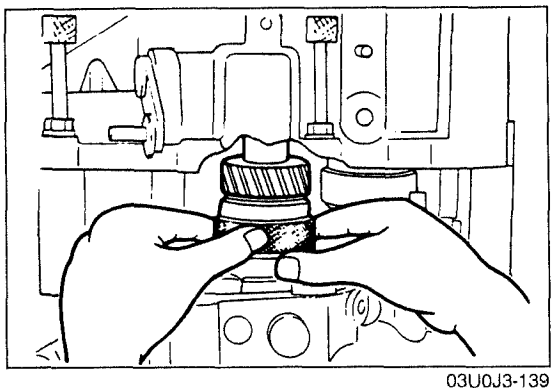

03U0J3-139

7. Manually expand the **SST** (selector) for both shafts until the **SST** (selector) no longer turns.

Note
- **Make sure that each shaft turns smoothly.**

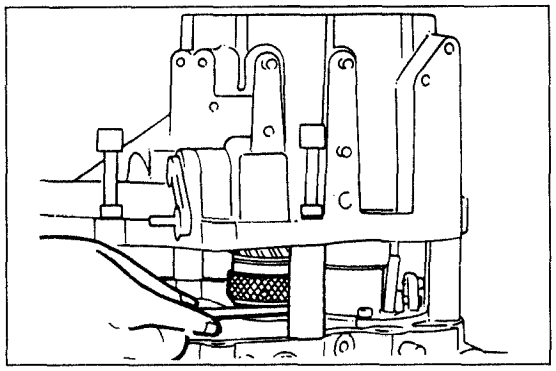

03U0J3-140

8. Measure the gap of the **SST** (selector) for both gears.

Note
- **Measure the gap around the entire circumference of the SST (selector).**

Note
- **The number of shims used must not exceed two.**

Thickness mm (in)
0.20 (0.008)
0.25 (0.010)
0.30 (0.012)
0.35 (0.014)
0.40 (0.016)
0.45 (0.018)
0.50 (0.020)
0.55 (0.022)
0.60 (0.024)
0.65 (0.026)
0.70 (0.028)

03U0J3-141

9. Select an appropriate adjustment shim.
   (1) The shim for the primary shaft gear should be selected by referring to the table and selecting the shim which is nearest (on the thin side) to the value obtained by subtracting the thickness of the diaphragm spring which goes between the shim and the race from the measured value of the gap in the **SST** (selector).

   Example: 0.94mm (0.0370 in)
   0.94mm (0.0370 in) – 0.70mm (0.0276 in) [Diaphragm spring]
   = 0.24mm (0.009 in)
   So the nearest shim (on thin side) to 0.24mm (0.009 in) is 0.20mm (0.008 in).

   (2) The shim for the secondary shaft gear should be selected by referring to the table and selecting the shim which is nearest (on the thick side) to the value obtained by subtracting the thickness of the diaphragm spring which goes between the shim and the race from the measured value of the gap in the **SST** (selector).

   Example: 0.94mm (0.0370 in)
   0.94mm (0.0370 in) – 0.70mm (0.0276 in) [Diaphragm spring]
   = 0.24mm (0.009 in)
   So the nearest shim (on thick side) to 0.24mm (0.009 in) is 0.25mm (0.010 in).

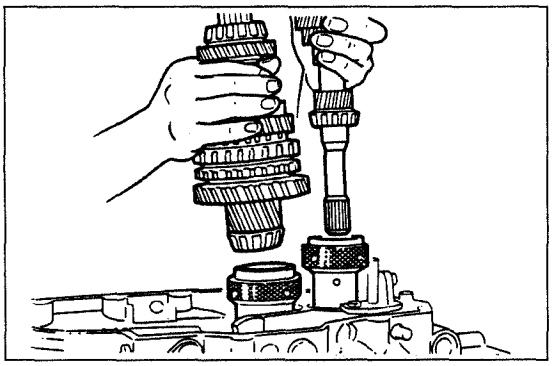

03U0J3-143

03U0J3-142

10. Remove the **SST** (bolts and collars) and then remove the transaxle case, shaft gears and **SST** (selectors).
11. Remove the bearing outer races for both shafts from the transaxle case.

Downloaded from www.Manualslib.com manuals search engine

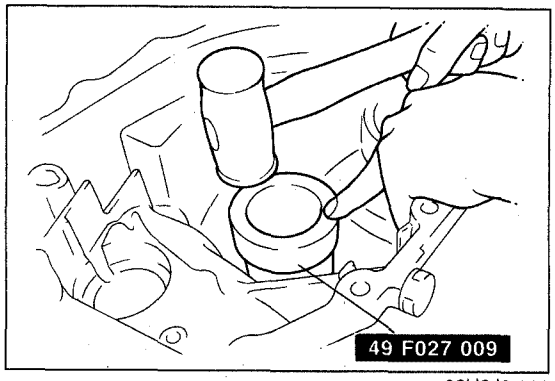

03U0J3-144

Front and center differential

1. Install the bearing outer race with the **SST**.

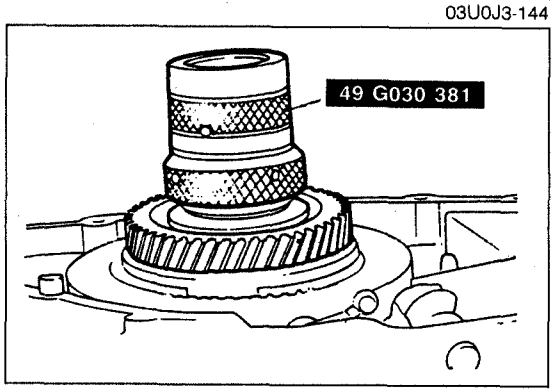

03U0J3-145

2. Install the front and center differential and bearing outer race.
3. Set the **SST** (selector) in place.

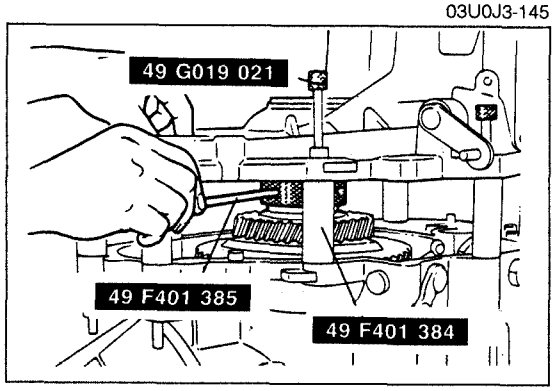

03U0J3-146

4. Set the **SST** (collars) between the transaxle case and the clutch housing, and install the **SST** (bolts), and tighten to the specified torque.

   Tightening torque:
   37—52 N·m (3.8—5.3 m-kg, 27—38 ft-lb)

5. Seat the bearings by turning the **SST** (selector) with the **SST** (bar) until the gap is enlarged.

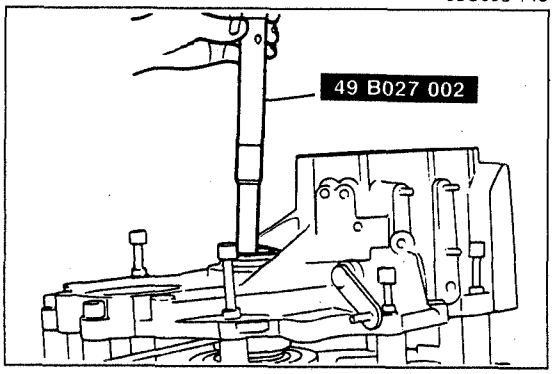

03U0J3-147

6. Insert the **SST**.

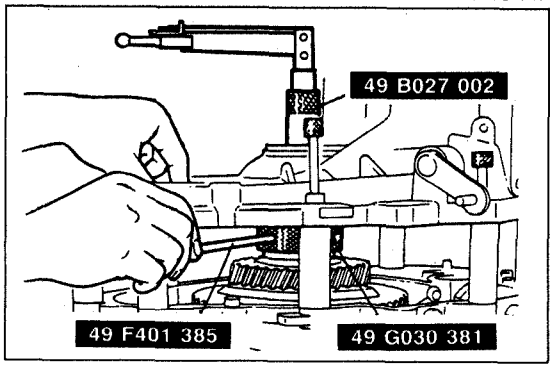

03U0J3-148

7. Expand the **SST** (selector) until the proper preload specification is obtained.

   Preload:
   0.3—1.2 N·m (3—12 cm-kg, 2.6—10.4 in-lb)

Downloaded from www.Manualslib.com manuals search engine

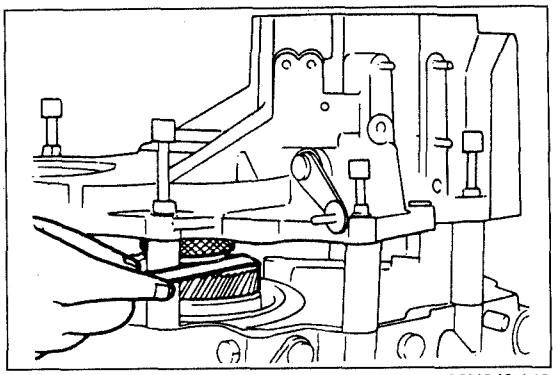

03U0J3-149

Note
- **Measure the gap around the entire circumference of the selector.**

8. Measure the gap in the **SST** (selector).

Thickness mm (in)	
0.10 (0.004)	0.70 (0.028)
0.20 (0.008)	0.75 (0.030)
0.25 (0.010)	0.80 (0.032)
0.30 (0.012)	0.85 (0.034)
0.35 (0.014)	0.90 (0.036)
0.40 (0.016)	0.95 (0.037)
0.45 (0.018)	1.00 (0.040)
0.50 (0.020)	1.05 (0.041)
0.55 (0.022)	1.10 (0.044)
0.60 (0.024)	1.15 (0.045)
0.65 (0.026)	1.20 (0.048)

03U0J3-150

Note
- **The number of shims used must not exceed three.**

9. Select an appropriate adjustment shim to be used for the differential. It should be selected by referring to the table and selecting the shim which is nearest (on thick side) to the largest measured value of the gap in the **SST** (selector).

   Example: 0.54mm (0.021 in)
   So the nearest shim (on thick side) to 0.54mm (0.021 in) is 0.6mm (0.014 in).

10. Remove the **SST** (bolts and collars) and then remove transaxle case.
11. Remove the **SST** (selector), bearing outer race and front and center differential.

Bearing Preload

Check the shaft gears and the differential bearing preload.

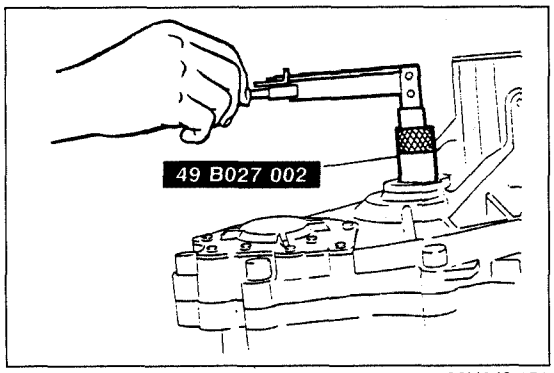

03U0J3-151

Note
- **Install the diaphragm springs and selected shims.**
- **If the bearing preload is not within specification, adjust again.**

1. Set the primary shaft gear and the front and center differential assembly into the clutch housing.
2. Install the transaxle case, and tighten to the specified torque.

   Tightening torque:
   37—52 N·m (3.8—5.3 m-kg, 27—38 ft-lb)

3. Connect the **SST** and install it through the driveshaft hole.

   Note
   - **Extend the handle fully and hook the pull scale to the end of the handle.**

4. Hook a spring scale to the attachment and measure the preload.

   Preload:
   1.4—2.0 N·m (14—20 cm-kg, 12.2—17.5 in-lb)

03U0J3-152

Downloaded from www.Manualslib.com manuals search engine

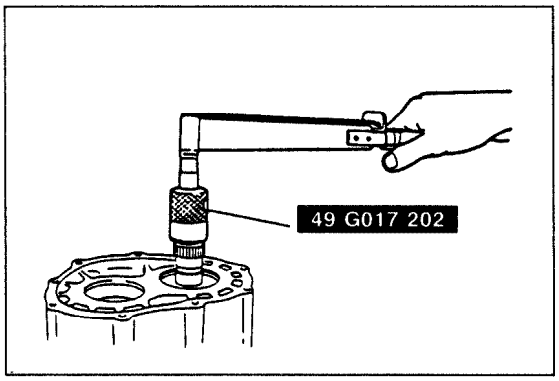

03U0J3-153

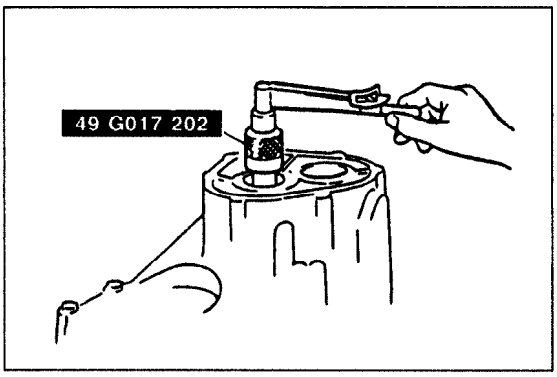

5. Connect the **SST** to the primary shaft gear.
6. Check the primary shaft preload.

   Preload:
   0.10—0.25 N·m (1.0—2.5 cm-kg, 0.87—2.18 in-lb)

7. Remove the **SST**, transaxle case, primary shaft gear and front and center differential assembly.
8. Install the secondary shaft gear and transaxle case, and tighten to the specified torque.

   Tightening torque:
   37—52 N·m (3.8—5.3 m-kg, 27—38 ft-lb)

9. Check the secondary shaft preload with the **SST**.

   Preload:
   0.3—0.4 N·m (3.0—4.3 cm-kg, 2.6—3.7 in-lb)

10. Remove the **SST**, transaxle case and secondary shaft gear.

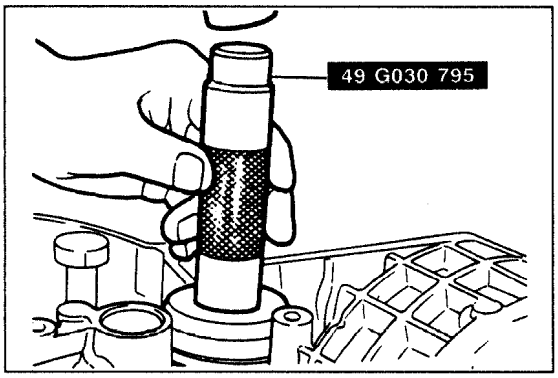

03U0J3-154

Assembly note
Oil seal (Front and center differential)

Caution
- **Apply transaxle oil to the outer edge of the oil seal.**

1. Install the new oil seal with the **SST**.

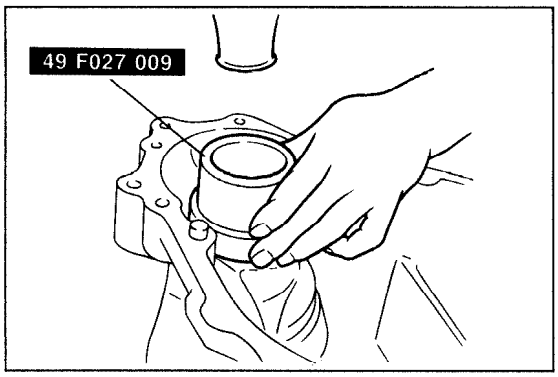

03U0J3-155

Bearing outer race (Idler gear)
1. Install the bearing outer race with the **SST**.

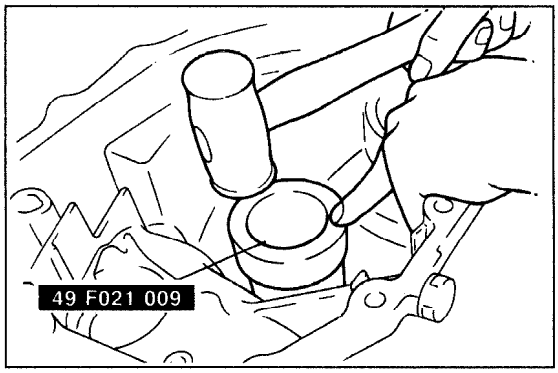

03U0J3-156

Bearing outer race (Front and center differential)
1. Install the bearing outer race with the **SST**.

Downloaded from www.Manualslib.com manuals search engine

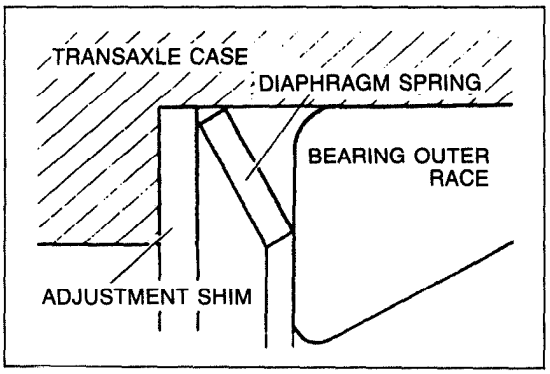

03U0J2-081

Diaphragm spring

1. Install the diaphragm spring as shown in the figure.

Downloaded from www.Manualslib.com manuals search engine

5th/Reverse Gear and Housing Parts

1. Assemble in the order shown in the figure, referring to **Assembly Note**.

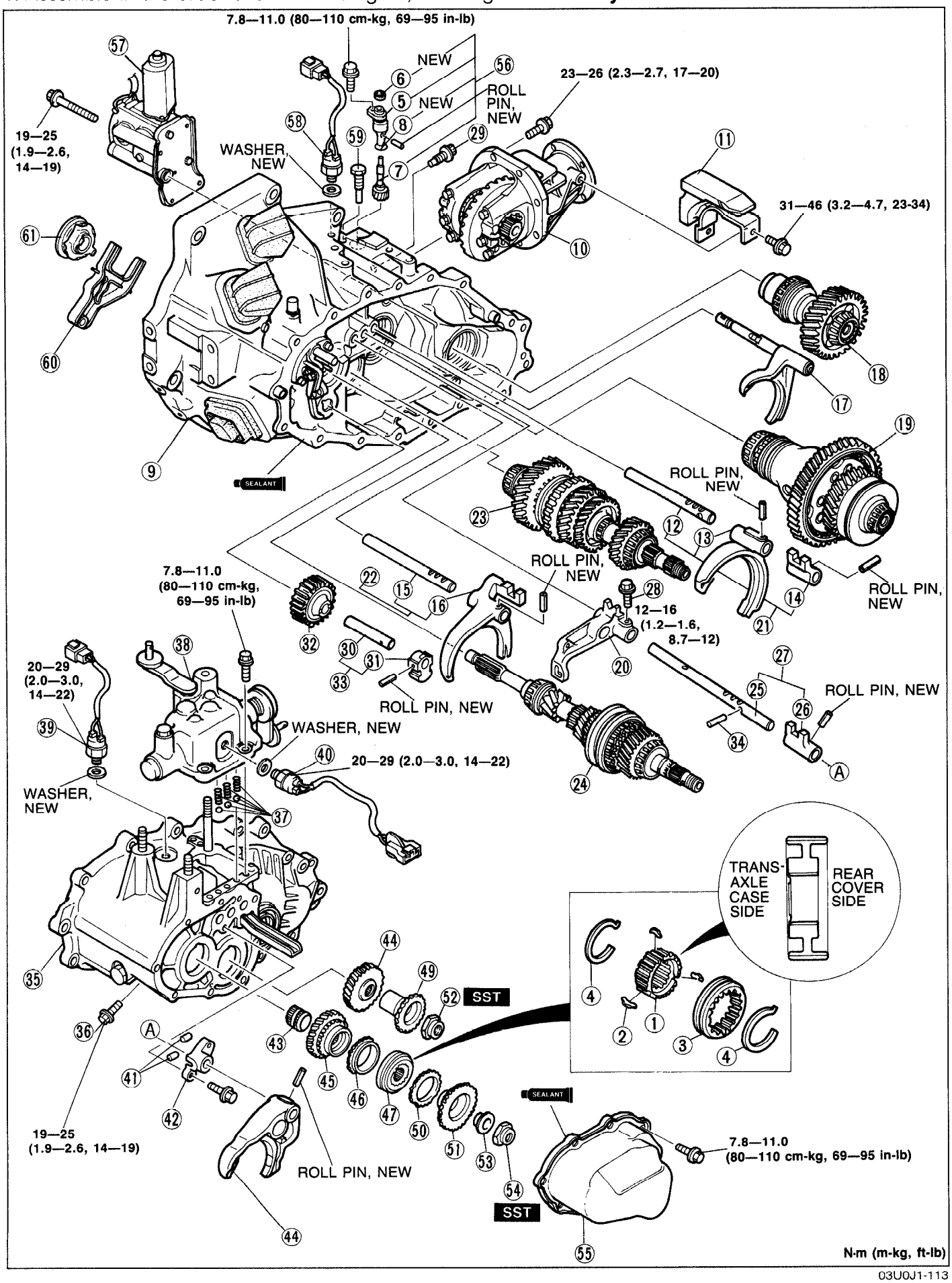

03U0J1-113

Downloaded from www.Manualslib.com manuals search engine

1. Clutch hub
2. Synchronizer keys
3. Clutch hub sleeve
4. Synchronizer key springs
5. Speedometer sleeve
6. Oil seal (Speedometer driven gear assembly)
   Assembly Note..... page J3–82
7. Speedometer driven gear
   Assembly Note..... page J3–82
8. O-ring
9. Clutch housing assembly
10. Transfer carrier assembly
11. Dynamic damper
12. Shift rod (1st/2nd)
13. Shift fork (1st/2nd)
14. Shift rod end
15. Shift rod (3rd/4th)
16. Shift fork (3rd/4th)
17. Center differential lock shift fork
18. Idler gear assembly
    Assembly Note..... page J3–82
19. Front and center differential assembly
    Assembly Note..... page J3–82
20. Shift gate
21. Shift fork assembly (1st/2nd)
22. Shift fork assembly (3rd/4th)
23. Secondary shaft assembly
    Assembly Note..... page J3–82
24. Primary shaft assembly
    Assembly Note..... page J3–82
25. Shift rod
26. Shift rod end
27. Shift rod assembly
28. Bolt
29. Bolt
30. Reverse idler gear shaft
31. Reverse idler gear support
32. Reverse idler gear
33. Reverse idler gear shaft assembly
    Assembly Note..... page J3–83
34. Interlock pin
    Assembly Note..... page J3–83
35. Transaxle case assembly
    Assembly Note..... page J3–83
36. Bolt
37. Steel balls and springs
38. Top cover assembly
    Assembly Note..... page J3–83
39. Back-up light switch
40. Neutral switch
41. Interlock pins
42. Interlock plate
43. Gear sleeve
44. Secondary 5th gear
45. Primary 5th gear
    Assembly Note..... page J3–84
46. Synchronizer ring
47. Clutch hub assembly
48. Shift fork
49. Secondary reverse synchronizer gear
50. Synchronizer ring
51. Primary reverse synchronizer gear
52. Locknut
    Assembly Note..... page J3–84
53. Spacer
54. Locknut
    Assembly Note..... page J3–84
55. Rear cover
    Assembly Note..... page J3–84
56. Speedometer driven gear assembly
57. Center differential lock motor
    Assembly Note..... page J3–84
58. Center differential lock switch
59. Differential lock set bolt
60. Clutch release fork
61. Clutch release bearing

03U0J3-157

Downloaded from www.Manualslib.com manuals search engine

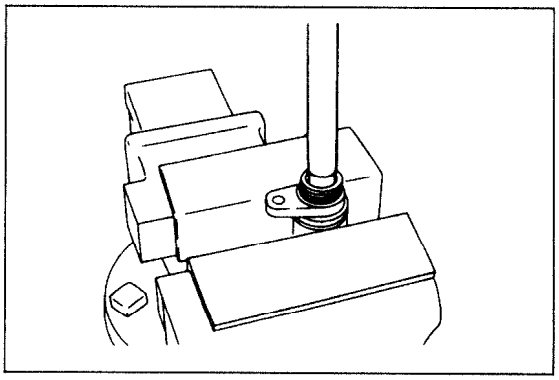

03U0J3-158

Assembly note
Oil seal (Speedometer driven gear assembly)
1. Install the new oil seal with a suitable pipe.

Pipe diameter: 16mm (0.629 in)

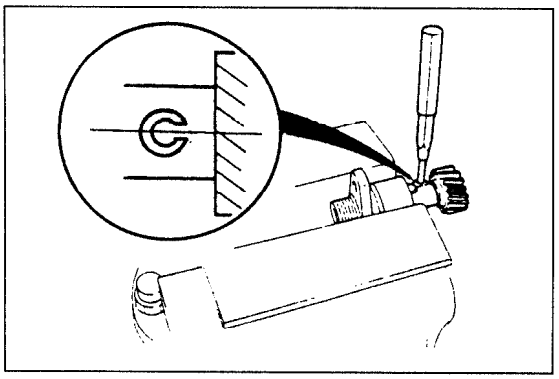

03U0J3-159

Speedometer driven gear
1. Install the new roll pin as shown in the figure.

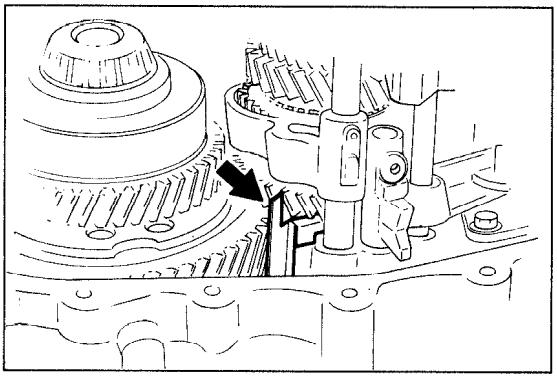

03U0J3-160

Primary shaft assembly, secondary shaft assembly, front and center differential, idler gear assembly

Caution
- **Do not incision the hands to install time.**
- **Do not damage the oil seal.**

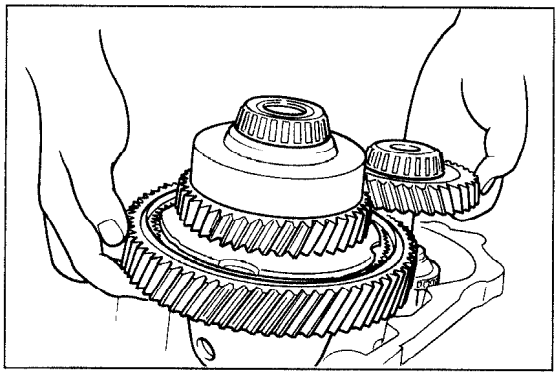

03U0J3-161

1. Lean the clutch housing.
2. Install the front and center differential assembly, idler gear, and center differential shift fork assembly.
3. Hold up the front and center differential assembly and idler gear assembly so that primary shaft and secondary shaft can be removed.

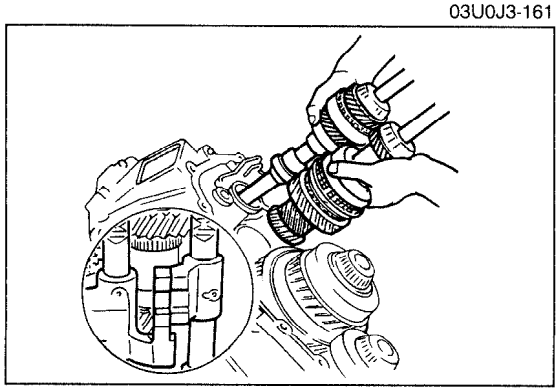

03U0J3-162

4. Align the shift forks (1st/2nd and 3rd/4th) as shown.
5. Install the primary shaft assembly, secondary shaft assembly, and shift fork assembly.
6. Verify that the gears are properly engaged.

Downloaded from www.Manualslib.com manuals search engine

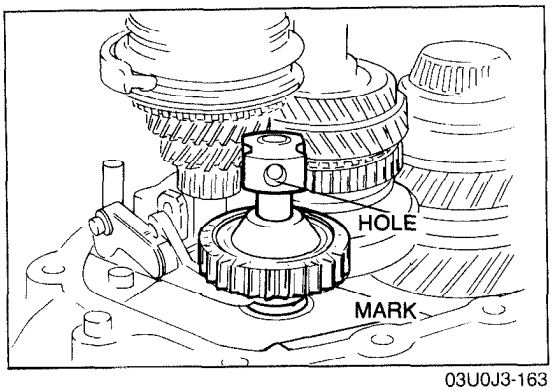

03U0J3-163

Reverse idler gear shaft assembly

Caution
- **Verify that the gears are properly engaged.**

1. Align the lock bolt hole and mark of the clutch housing.

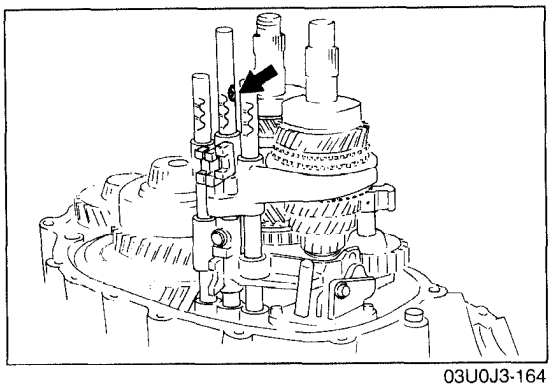
03U0J3-164

Interlock pin
1. Install the interlock pins as shown in the figure.

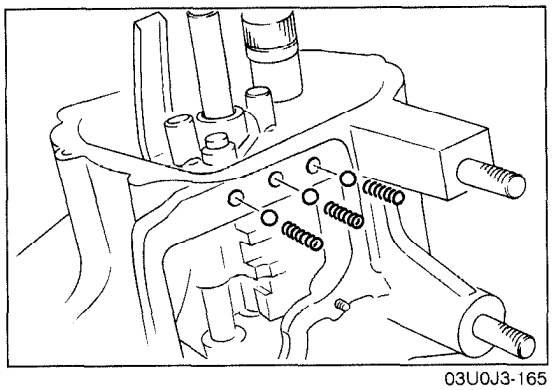
03U0J3-165

Top cover assembly
1. Install the steel balls and the springs.

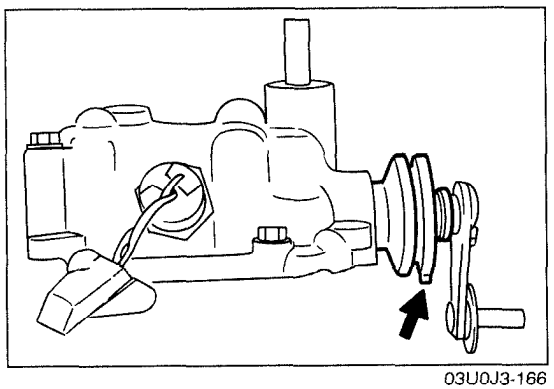
03U0J3-166

2. Install the top cover.
3. Install the boot with the air bleed downward as shown in the figure.

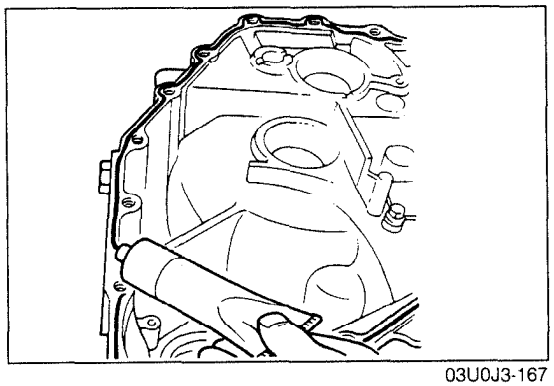
03U0J3-167

Transaxle case assembly
1. Apply a thin coat of sealant to the contact surfaces of the clutch housing and transaxle case.
2. Install and tighten the transaxle case installation bolts to the specified torque.

Tightening torque:
37—52 N·m (3.8—5.3 m-kg, 27—38 ft-lb)

Downloaded from www.Manualslib.com manuals search engine

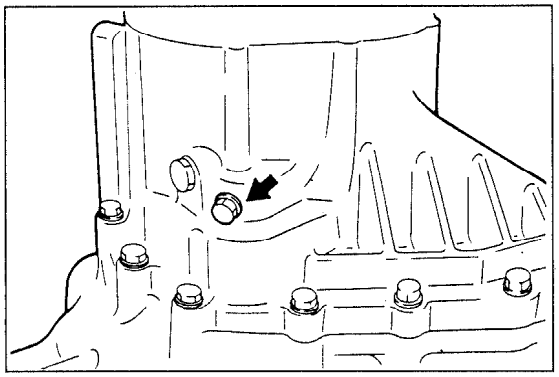

03U0J3-168

3. Install the bolt.

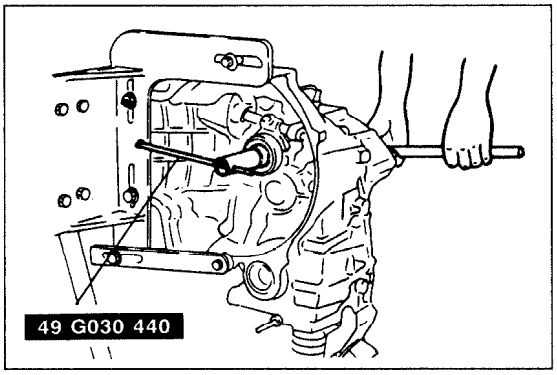

03U0J3-169

Locknut

1. Shift to 1st gear.
2. Lock the primary shaft with the **SST**.
3. Tighten new locknuts on the primary and secondary shafts.

Tightening torque:
128—206 N·m (13.0—21 m-kg, 94—152 ft-lb)

4. Stake the locknuts to the groove.

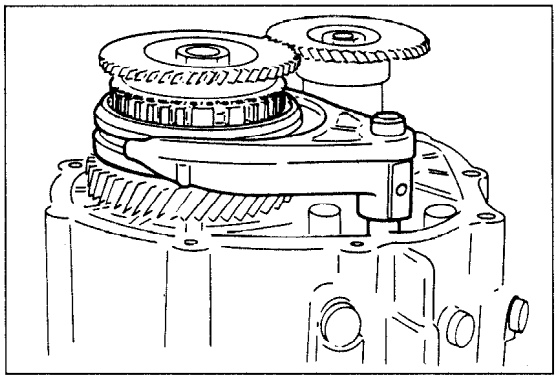

03U0J3-170

Primary 5th gear

Note
- **After installation, move the shift rod to verify that the gear change operation is smooth.**

1. Shift to neutral and install the roll pin.

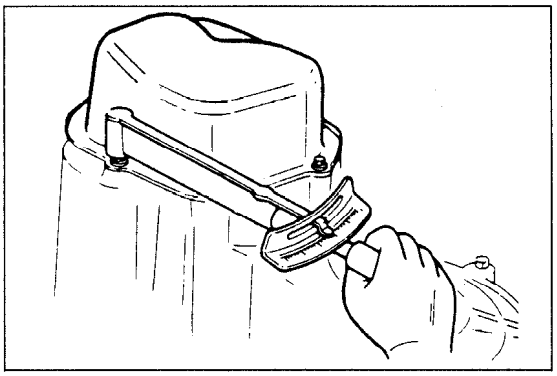

03U0J3-171

Rear Cover

Note
- **Clean the contact surfaces before applying sealant.**

1. Apply sealant to the transaxle case and rear cover.
2. Install the rear cover.

Tightening torque:
7.8—11 N·m (0.8—1.1 m-kg, 5.8—8.0 ft-lb)

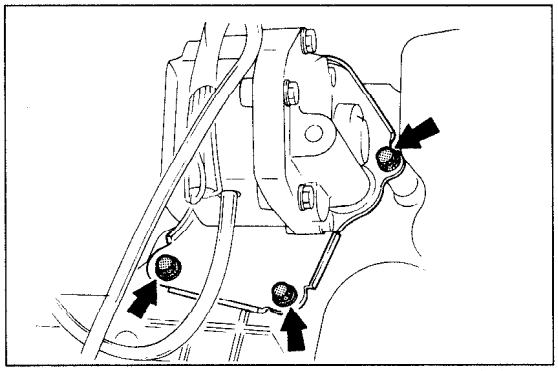

03U0J3-172

Center Differential Lock motor

1. Install the center differential lock motor.

Tightening torque:
19—25 N·m (1.9—2.6 m-kg, 14—19 ft-lb)

Downloaded from www.Manualslib.com manuals search engine

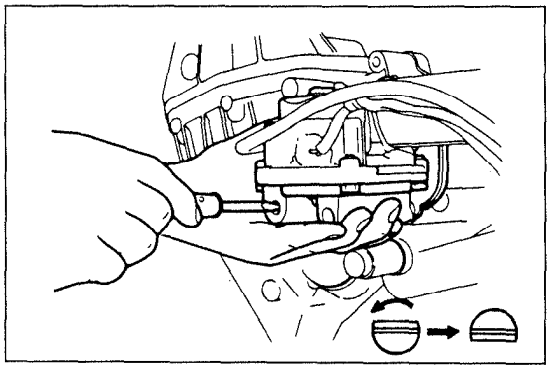

03U0J3-173

2. Turn the rod 180° counterclockwise with a screwdriver, and install the plug.
3. Install the bolts.

Tightening torque:
9—14 N·m (90—140 cm-kg, 78—122 ft-lb)

4. Install the differential lock switch.

Tightening torque:
20—29 N·m (2—3 m-kg, 14—22 ft-lb)

Downloaded from www.Manualslib.com manuals search engine

INSTALLATION

1. Raise the vehicle and support it with safety stands.
2. Install in the order shown in the figure, referring to **Installation Note**.
3. Add the specified amount of the specified transaxle oil. (Refer to page J3–11.)
4. Warm-up the engine and transaxle, and inspect for oil leakage and transaxle operation.

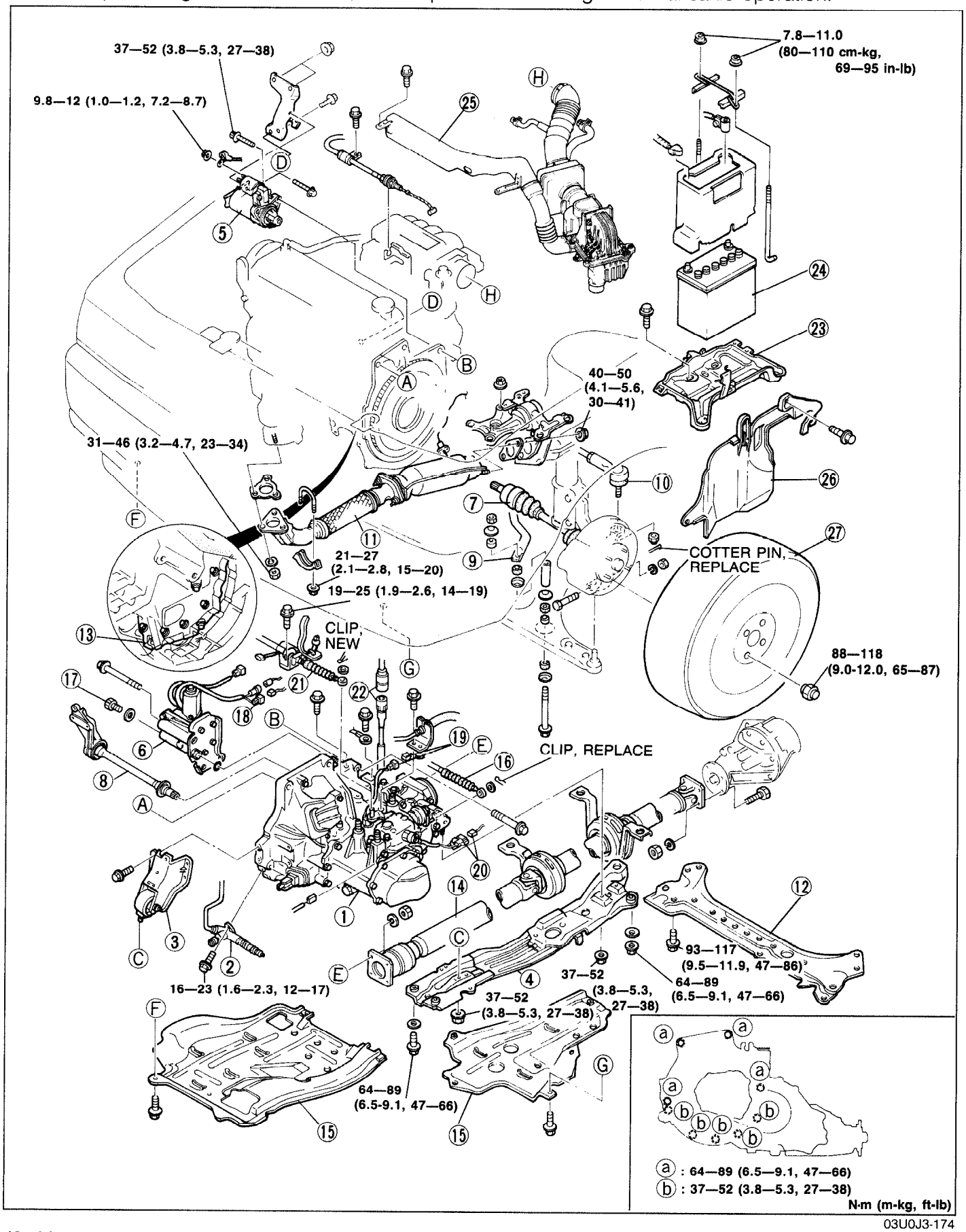

03U0J3-174

Downloaded from www.Manualslib.com manuals search engine

1. Transaxle and transfer unit
   Installation Note ..... page J3–87
2. Clutch release cylinder and clutch pipe
3. Engine mount No.2
4. Engine mounting member
   Installation Note ..... page J3–87
5. Starter
6. Center differential lock motor
7. Driveshaft
   Installation Note ..... page J3–88
8. Joint shaft
9. Stabilizer
   Installation Note ..... page J3–88
10. Tie-rod end
    Installation Note ..... page J3–89
11. Exhaust pipe
12. Crossmember
13. Integrated stiffener
14. Propeller shaft
    Installation Note ..... page J3–89
15. Undercover
16. Control cable
    Installation Note ..... page J3–89
17. Bolt
18. Differential lock motor connector
19. Back-up light switch connector
20. Neutral switch connector
    Installation Note ..... page J3–89
21. Shift cable
22. Speedometer cable
    Assembly Note..... page J3–90
23. Battery carrier
24. Battery
25. Air hose and air cleaner assembly
26. Splash shield
27. Wheel and tire

03U0J3-175

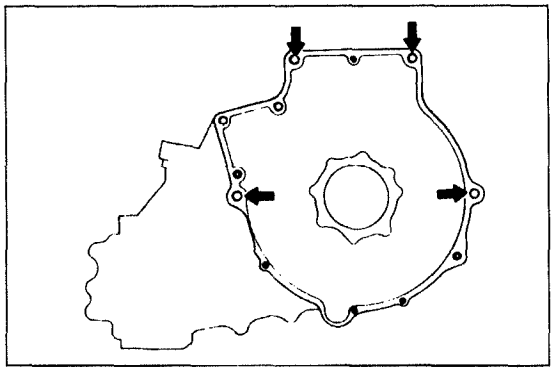

03U0J3-176

Installation Note
Transaxle and transfer carrier
1. Mount the transaxle to the engine.

Tightening torque:
55—80 N·m (5.6—8.2 m-kg, 41—59 ft-lb)

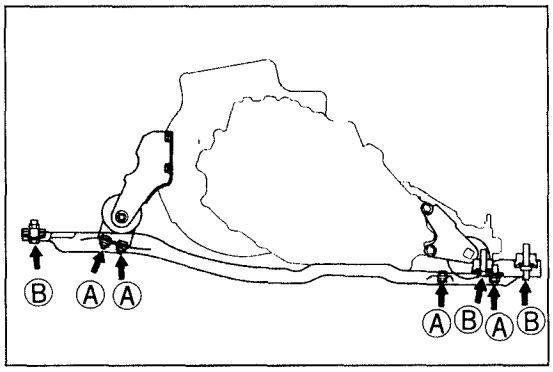

03U0J3-177

Engine mounting member
1. Tighten the bolts as shown.

Tightening torque:
A 37—52 N·m (3.8—5.3 m-kg, 27—38 ft-lb)
B 64—89 N·m (6.5—9.1 m-kg, 47—66 ft-lb)

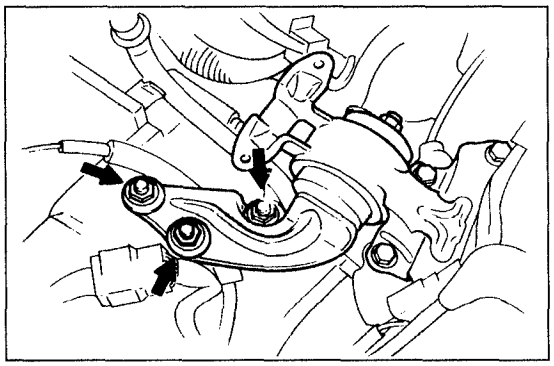

03U0J3-178

2. Tighten engine mount No.4 nuts.

Tightening torque:
66—93 N·m (6.8—9.5 m-kg, 49—68 ft-lb)

Downloaded from www.Manualslib.com manuals search engine

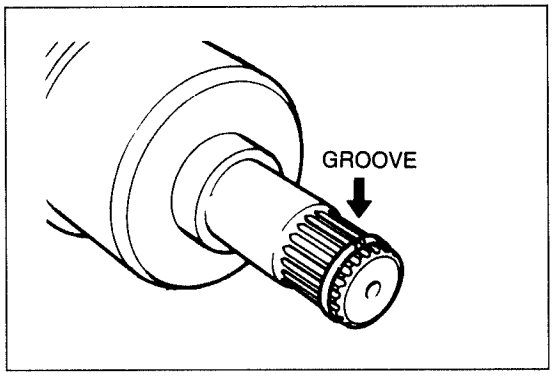

03U0J3-217

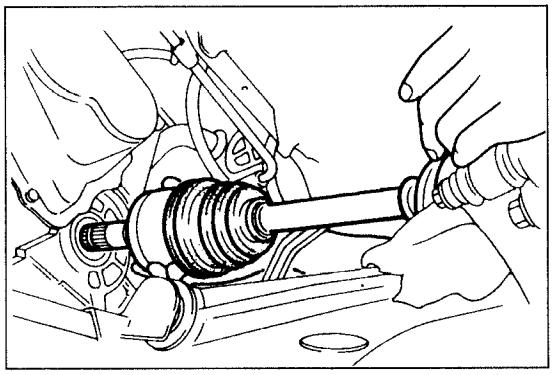
03U0J3-179

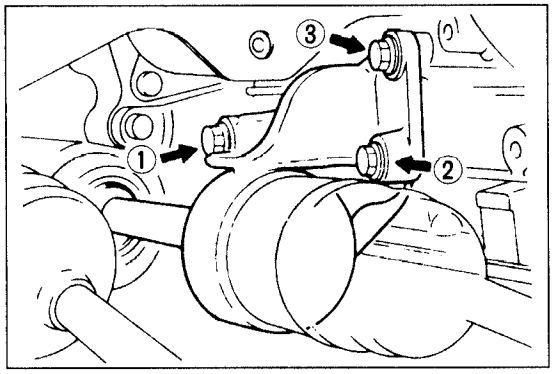

03U0J3-180

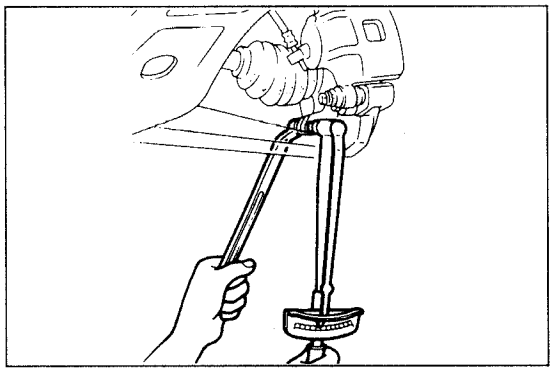
03U0J3-181

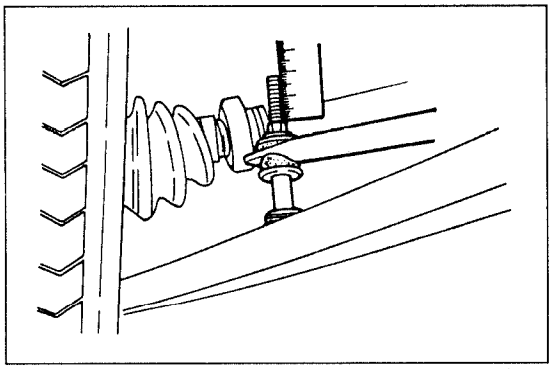
03U0KX-499

Driveshaft

Caution
- **Do not damage the oil seal.**
- **After installation, pull the front hub outward to verify that the driveshaft is secured.**

1. Replace the clips at the ends of the driveshafts and joint shaft with new ones.
2. Push the driveshafts into the differential with the groove of the clips upward.

Note
- **Apply ATF to the oil seal lip.**

3. Install the driveshaft.

4. Tighten the joint shaft mounting bolts in the order shown.

Tightening torque:
42—62 N·m (4.3—6.3 m-kg, 31—46 ft-lb)

5. Install the lower arm ball joint to the knuckle and tighten the bolt.

Tightening torque:
43—54 N·m (4.4—6.0 m-kg, 32—40 ft-lb)

Stabilizer

1. Tighten the stabilizer nut so that **17mm (0.67 in)** to **19mm (0.75 in)** of thread is exposed at the end of the bolt.

Downloaded from www.Manualslib.com manuals search engine

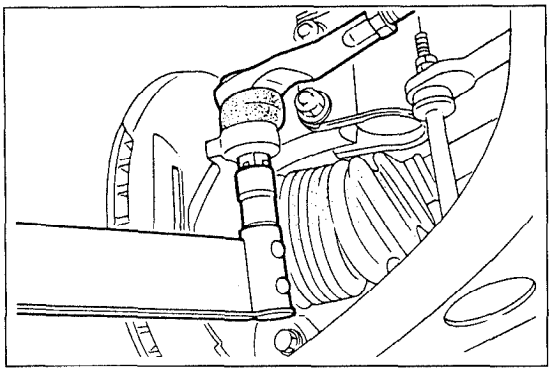

03U0J1-126

Tie-rod end

1. Install the locknut.

   Tightening torque:
   42—57 N·m (4.3—5.8 m-kg, 31—42 ft-lb)

2. Secure the locknut with a new cotter pin.

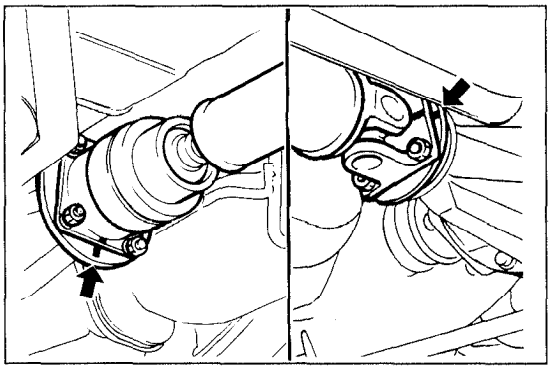

03U0J3-182

Propeller shaft

1. Align the marks and install the propeller shaft. (Refer to Section L.)

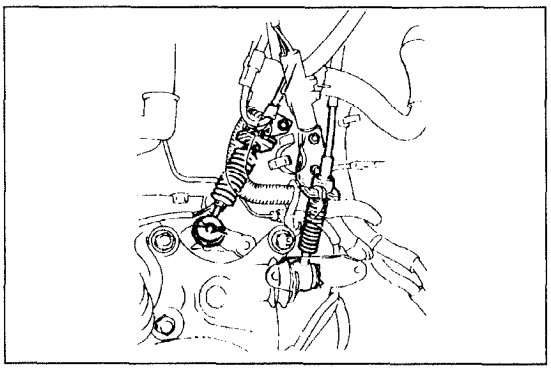

03U0J3-183

Control cable

1. Install the bracket.

   Tightening torque:
   18—25 N·m (1.9—2.6 m-kg, 13—18 ft-lb)

2. Attach the control cable to the bracket with the clip.
3. Connect the control cable to the transaxle and transfer unit and install the washers and the pins.

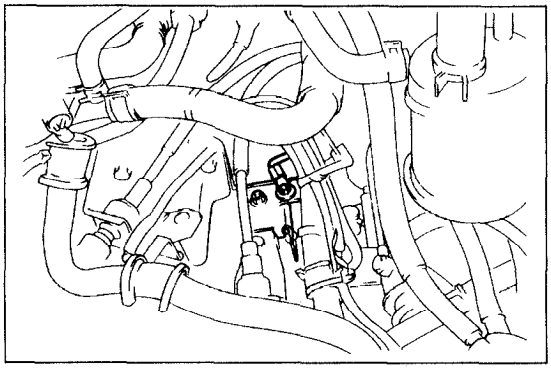

03U0J3-184

4. Connect the ground to the clutch pipe bracket.

   Tightening torque:
   15—22 N·m (1.6—2.3 m-kg, 11—16 ft-lb)

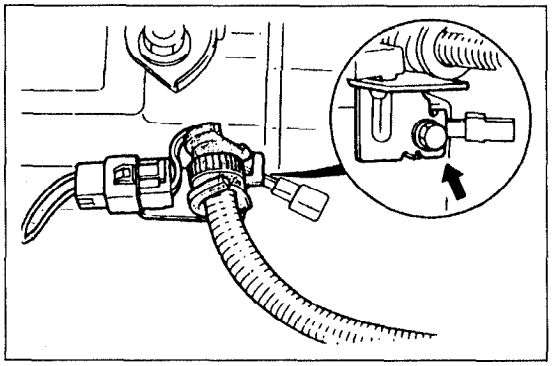

03U0J3-185

Neutral switch connector

1. Install the bracket.
2. Connect the neutral switch connector.

Downloaded from www.Manualslib.com manuals search engine

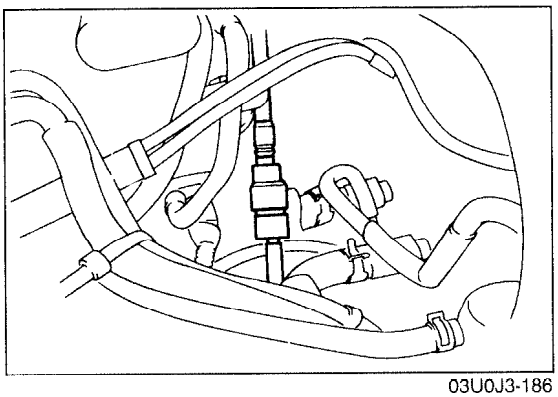

03U0J3-186

Speedometer cable

1. Connect the speedometer cable.

Downloaded from www.Manualslib.com manuals search engine

SHIFT MECHANISM

OVERHAUL

1. Disassemble in the order shown in the figure, referring to **Disassembly Note**.
2. Inspect all parts and repair or replace as necessary.
3. Assemble in the reverse order of disassembly, referring to **Assembly Note**.

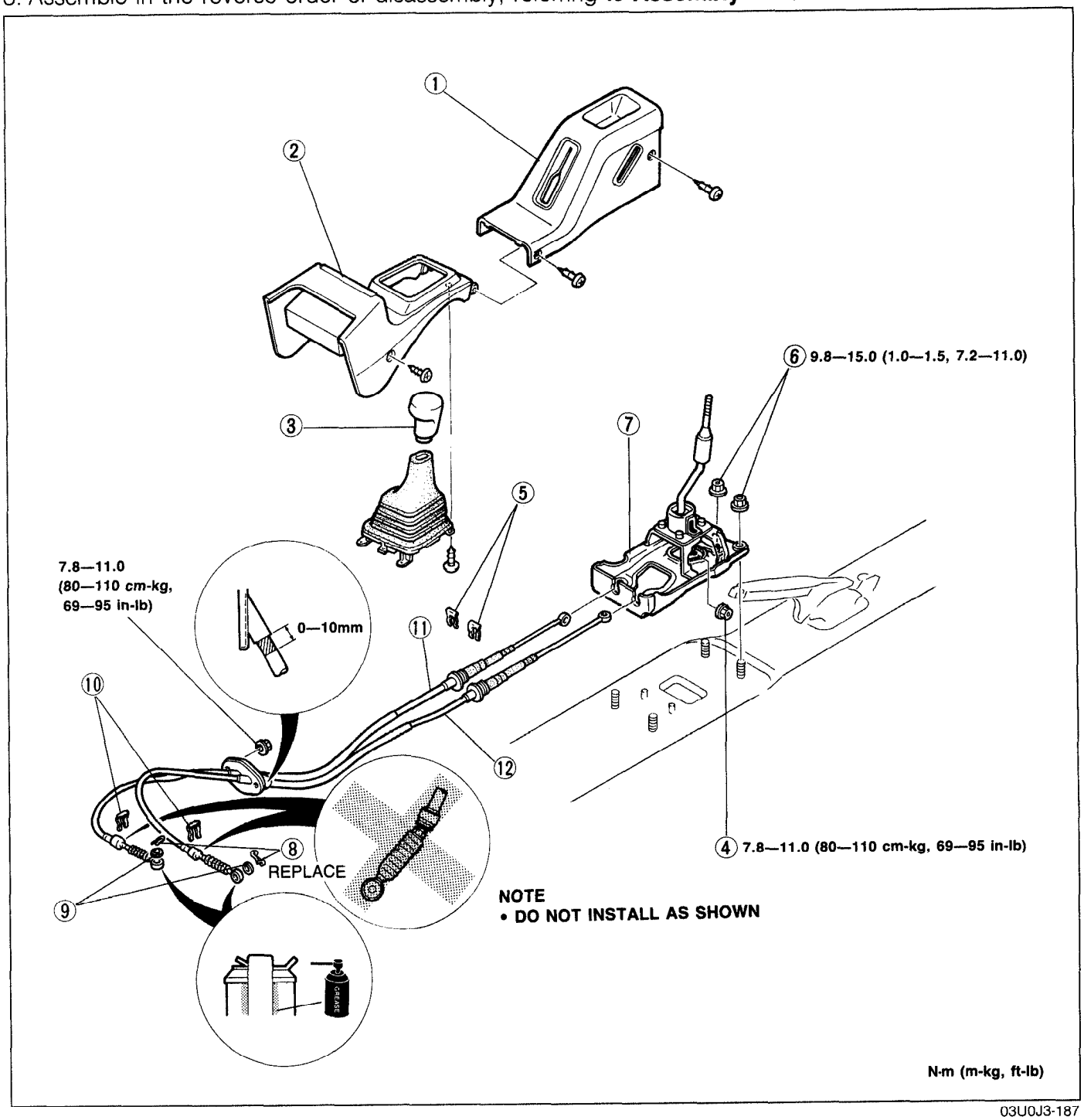

03U0J3-187

1. Rear console
   Assembly Note..... page J3–92
2. Front console
   Disassembly Note..... page J3–92
3. Shift lever knob
4. Nut (Cable)
5. Clips (Cable)
6. Nuts (Shift lever assembly)
7. Shift lever assembly
   Assembly Note..... page J3–92
8. Snap pins
9. Washers
10. Clips (Cable)
11. Select cable
12. Shift cable

Downloaded from www.Manualslib.com manuals search engine

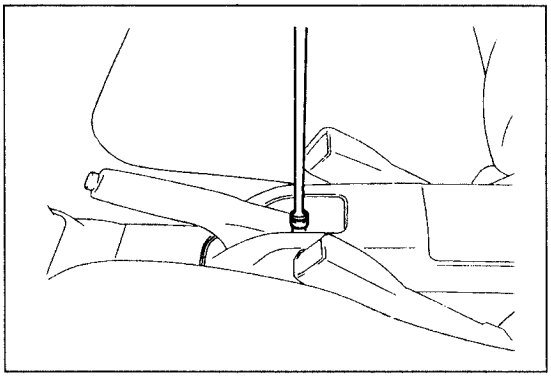

03U0J3-188

Disassembly Note
Front console

1. Loosen the bolt as shown.
2. Remove the rear console.
3. Remove the front console.

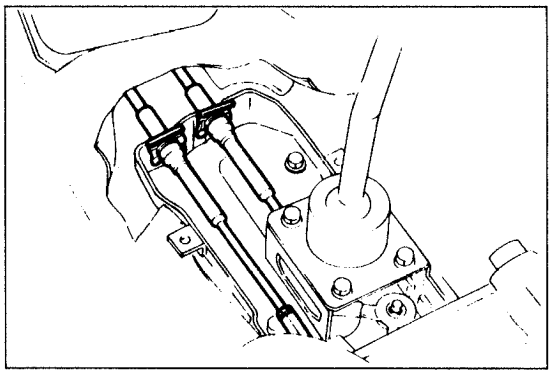

03U0J3-189

Shift lever assembly

1. Remove the nut and the clips.
2. Disconnect the shift cable and select cable from the shift lever assembly.

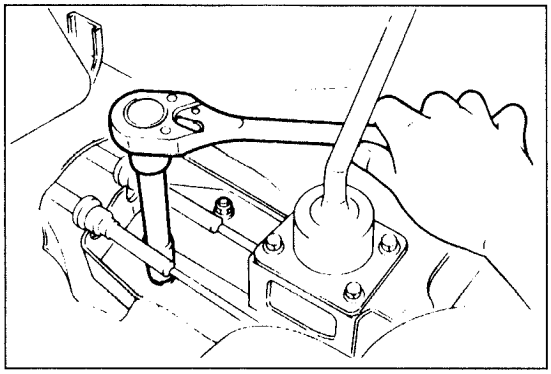

03U0J3-190

3. Remove the 4 mounting nuts.
4. Remove the shift lever assembly.

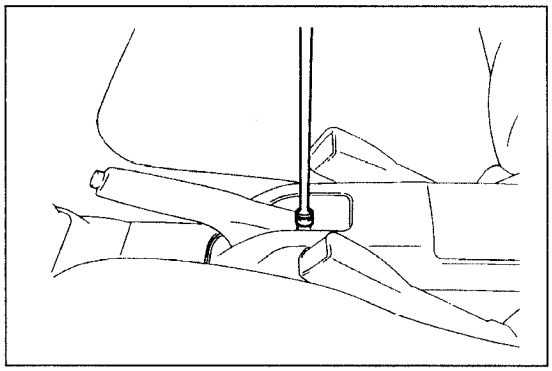

03U0J3-191

Assembly Note
Rear console

1. After install the rear console, adjust the parking brake lever. (Refer to Section P.)

Downloaded from www.Manualslib.com manuals search engine

CENTER DIFFERENTIAL LOCK SYSTEM

SYSTEM DIAGRAM

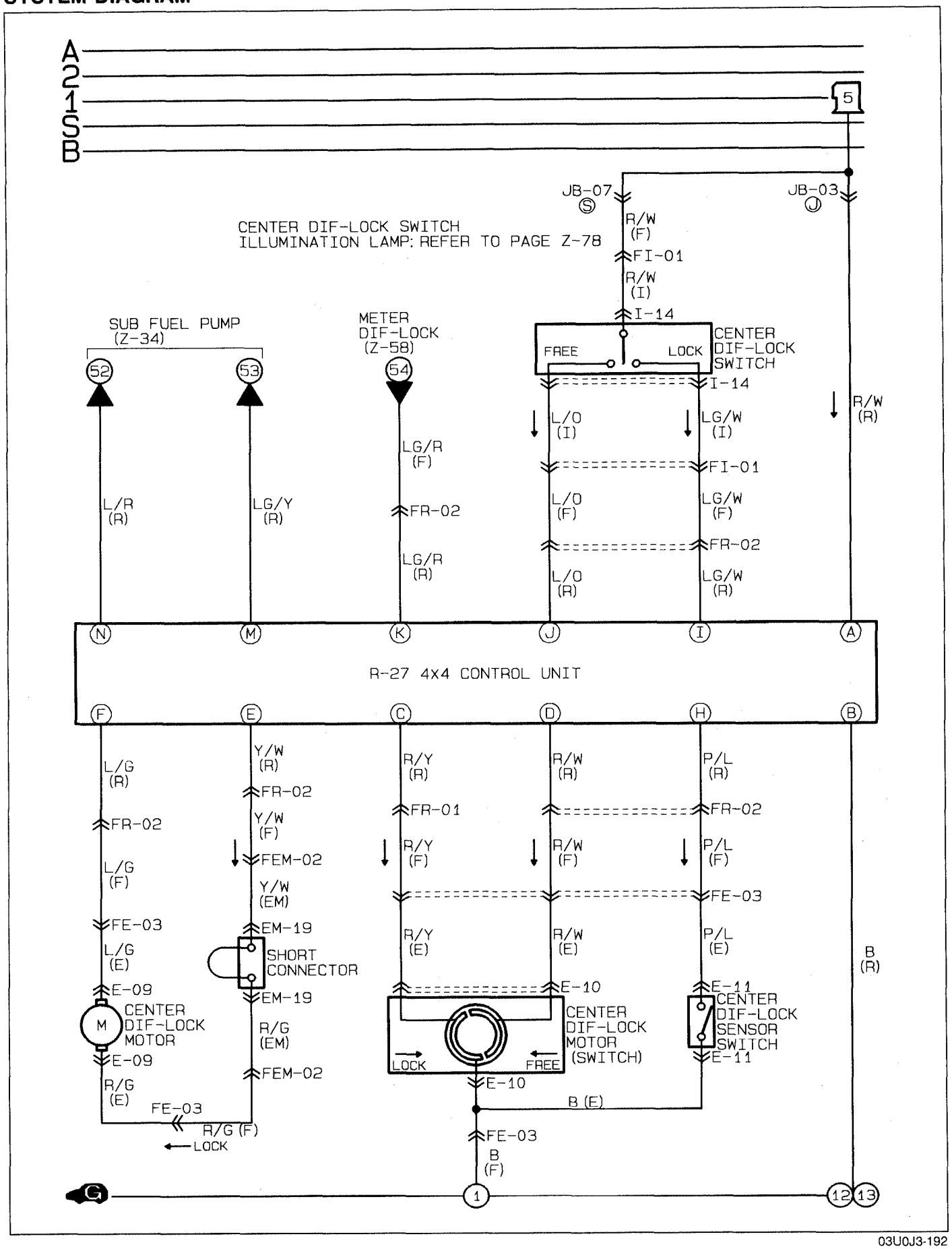

03U0J3-192

Downloaded from www.Manualslib.com manuals search engine

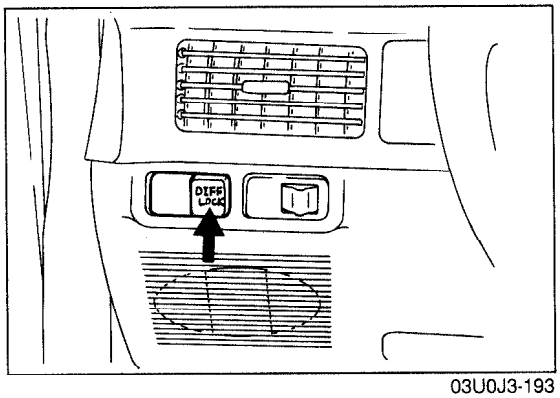

03U0J3-193

INSPECTION

1. Turn the ignition switch ON.
2. Push the center differential lock switch ON.

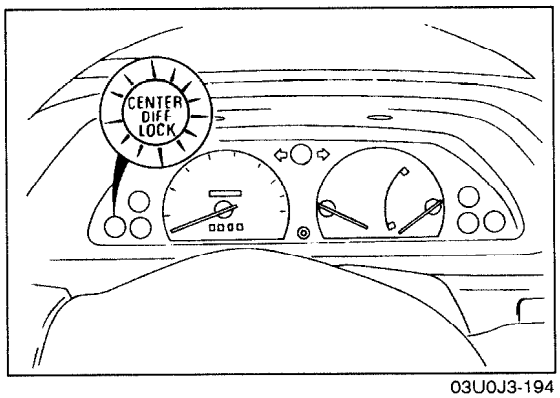

03U0J3-194

3. Verify that the indicator lamp in the instrument cluster is turned on and a beep is heard.

Note

- **The indicator lamp will flash until the center differential is fully engaged. If necessary, move the vehicle forward until the differential engages.**

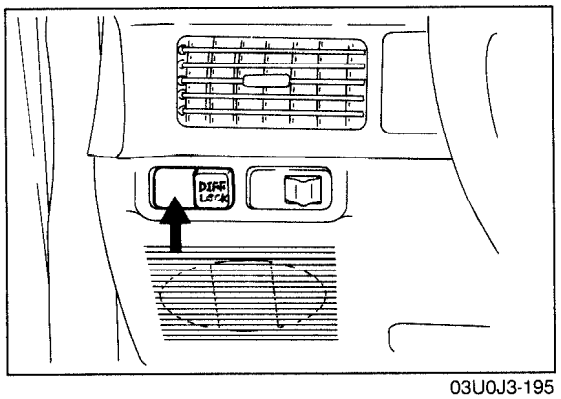

03U0J3-195

4. Push the center differential lock switch OFF.

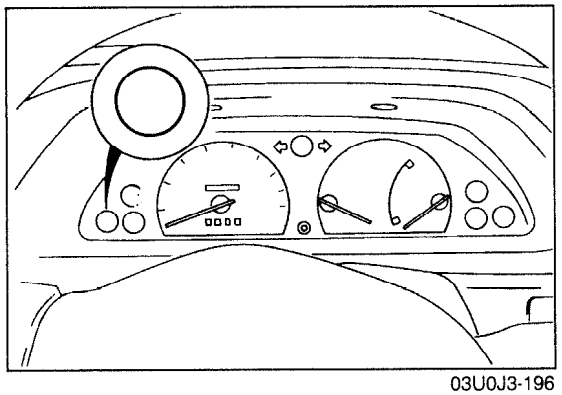

03U0J3-196

5. Verify that the indicator lamp in the instrument cluster goes OFF.

Downloaded from www.Manualslib.com manuals search engine

CENTER DIFFERENTIAL LOCK MOTOR

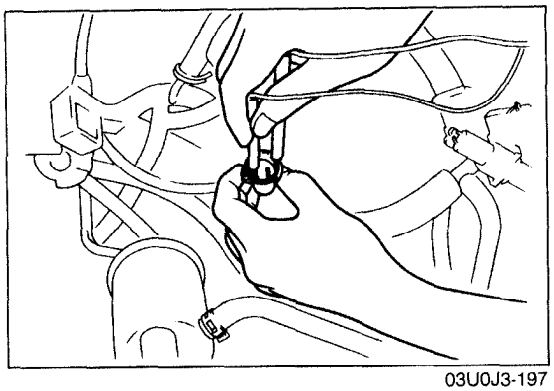

03U0J3-197

INSPECTION

Continuity

1. Disconnect the negative battery terminal.
2. Disconnect the connectors of the center differential lock motor.
3. Check resistance between terminals at the motor side connectors.

Unit: Ω (Ohm)

Motor	B—G	D—G	W—L
Free	∞	0	1—3
Lock	0	∞	

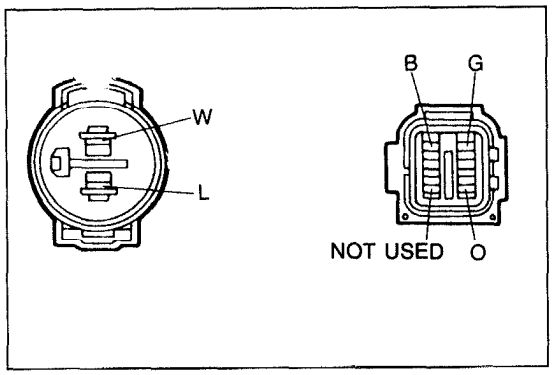

REPLACEMENT

1. Disconnect the negative battery terminal.
2. Disconnect the connector and breather hose of center differential lock motor and center differential lock sensor switch.

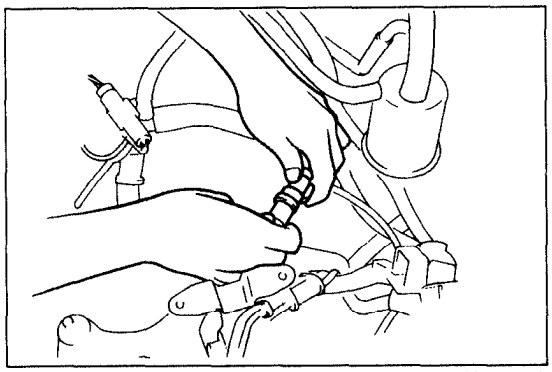

03U0J3-198

3. Remove the set bolt and center differential lock sensor switch.

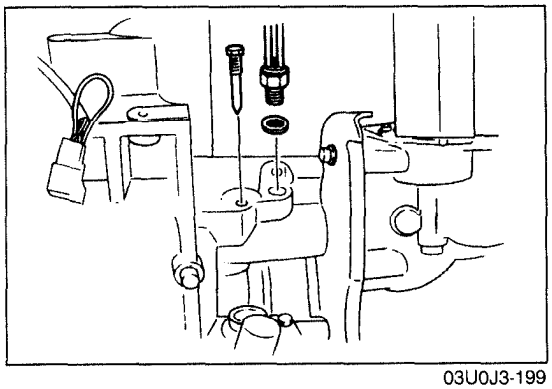

03U0J3-199

4. Remove the undercover and crossmember.
5. Remove the exhaust pipe.

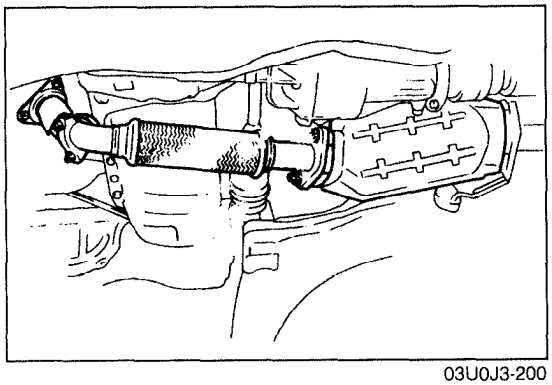

03U0J3-200

Downloaded from www.Manualslib.com manuals search engine

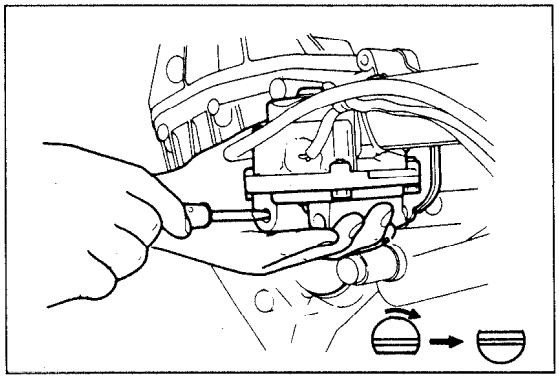

03U0J3-201

6. Remove the plug and turn shift rod 180° clockwise with the screwdriver.

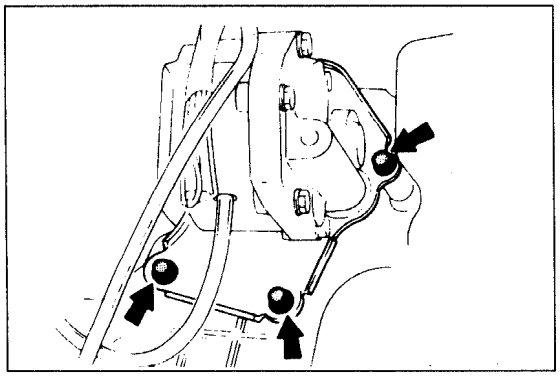

03U0J3-202

7. Remove the center differential lock motor from the transaxle and transfer unit.
8. Remove the O-ring from the center differential lock motor.

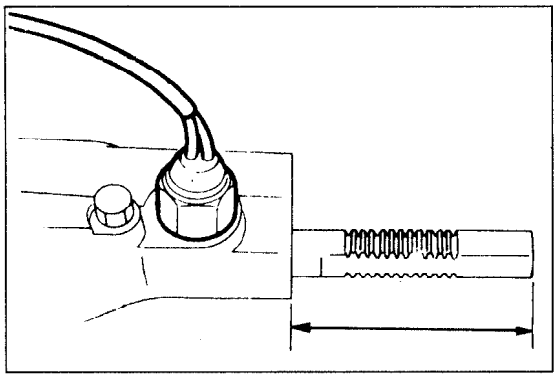

03U0J3-203

9. Measure the shift rod length in FREE and LOCK position.

Standard length:
FREE: 75mm (2.95 in)
LOCK: 83mm (3.26 in)

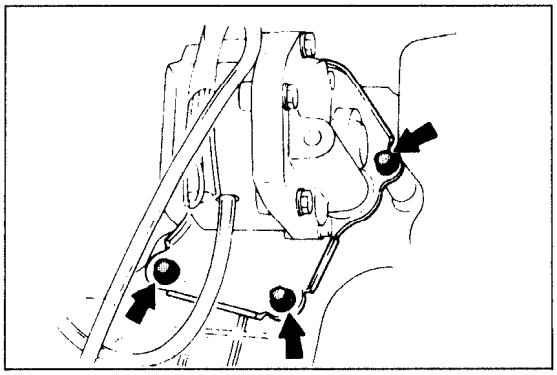

03U0J3-204

Note
- **Apply ATF to the O-ring.**

10. Fit a new O-ring onto the center differential lock motor.
11. Confirm that the flat edge of the shift rod is upward.

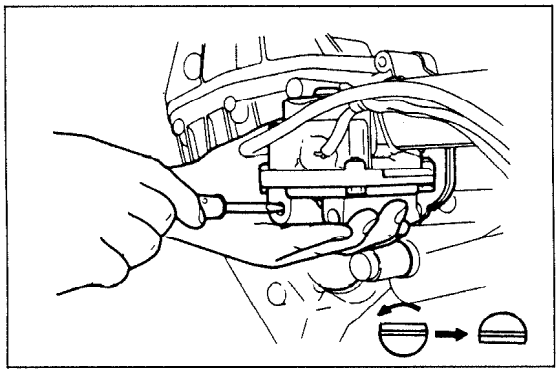

03U0J3-205

12. Turn the shift rod 180° counterclockwise with a screwdriver.

Downloaded from www.Manualslib.com manuals search engine

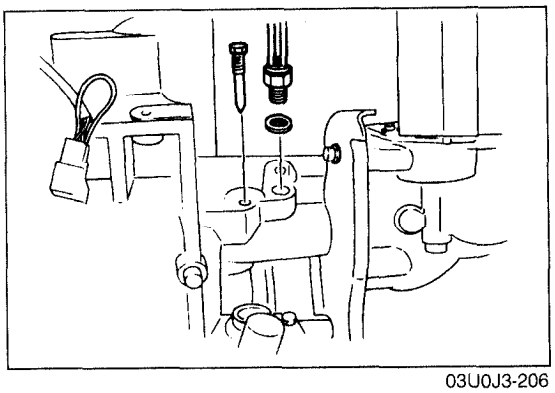

03U0J3-206

13. Install the mounting bolts.

Tightening torque:
20—29 N·m (2.0—3.0 m-kg, 14—22 ft-lb)

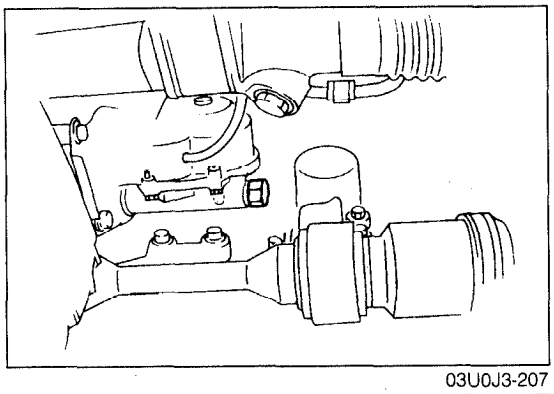

03U0J3-207

14. Install the set bolt.

Tightening torque:
20—29 N·m (2.0—3.0 m-kg, 14—22 ft-lb)

15. Install the center differential lock sensor switch.

Tightening torque:
20—29 N·m (2.0—3.0 m-kg, 14—22 ft-lb)

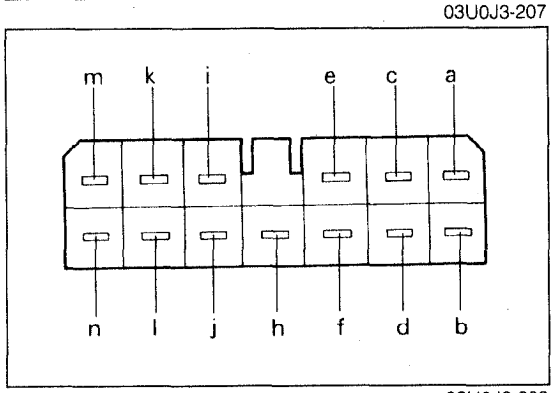

03U0J3-208

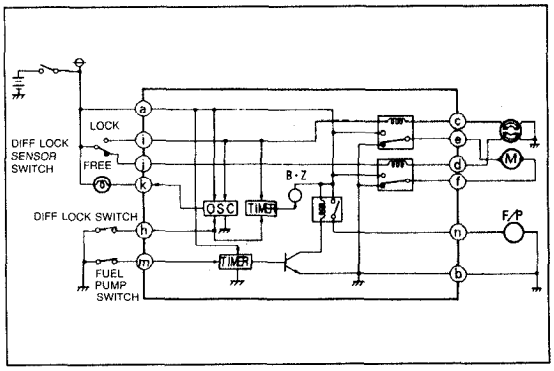

4x4 CONTROL UNIT

INSPECTION

Terminal Voltage

1. Turn the ignition switch ON.
2. Measure the voltage at each terminal.

Unit: Volt

	a	b	c	d	e	f	h	i	j	k	l	m	n
Free	12	0	0	12	0	*0	12	0	12	12	—	6↔0	0↔12
Lock	12	0	12	0	*0	0	0	12	0	0	—	6↔0	0↔12

↔: Repeat the timer time.
*: Start the differential lock motor time is 12 volt.

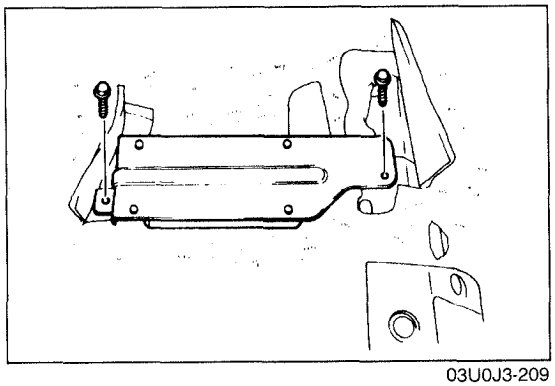

03U0J3-209

REPLACEMENT

1. Disconnect the negative battery terminal.
2. Remove the driver's seat.
3. Replace the 4x4 control unit.

Downloaded from www.Manualslib.com manuals search engine

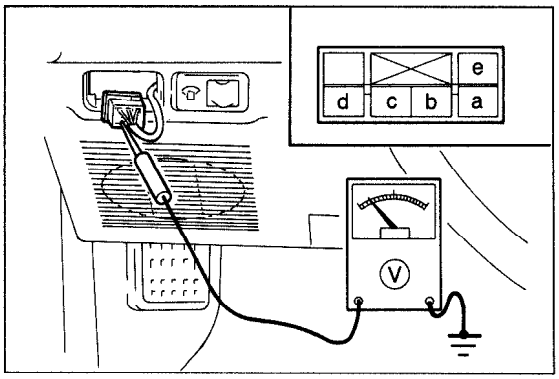

03U0J3-210

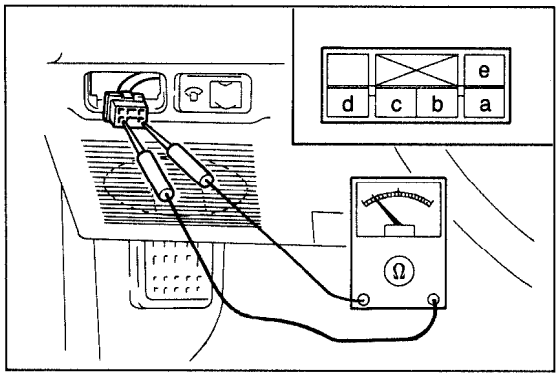

03U0J3-211

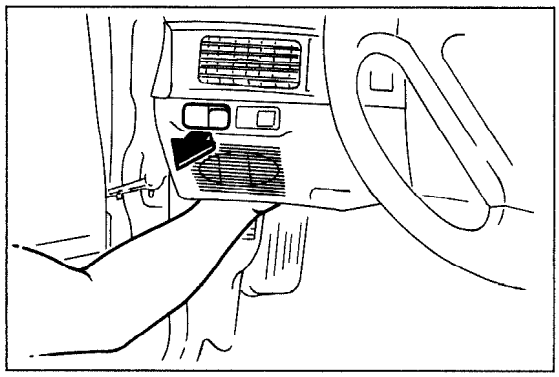
03U0J3-212

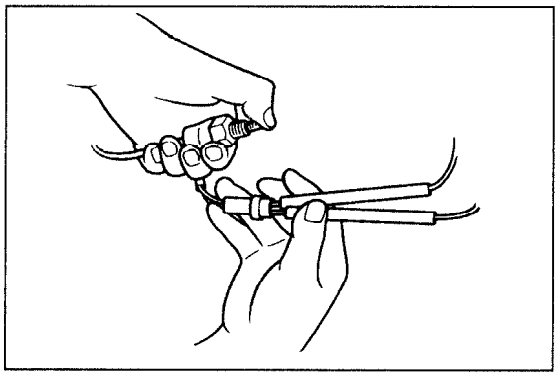
03U0J3-213

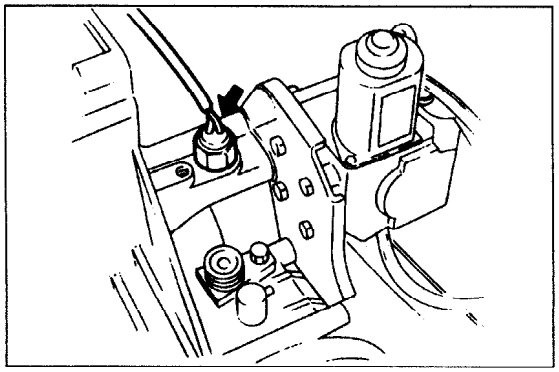
03U0J3-214

CENTER DIFFERENTIAL LOCK SWITCH

INSPECTION

Terminal Voltage

1. Turn the ignition switch ON.
2. Measure the voltage at each terminal at the switch side of the connector in LOCK and FREE position.

Unit: Volt

Motor	a	b	c	d	e
Free	*12	0	12	12	0
Lock	0	0	12	0	12

* Turn the light switch (first position).

Continuity

1. Disconnect the negative battery terminal.
2. Disconnect the connector of switch.
3. Check continuity in LOCK and FREE position.

Motor	a	b	c	d	e
Free	○—○		○—○		
Lock	○—○		○		○

○—○: Indicates continuity

REPLACEMENT

1. Disconnect the negative battery terminal.
2. Remove the switch.
3. Replace the switch.

CENTER DIFFERENTIAL LOCK SENSOR SWITCH

INSPECTION

Continuity

1. Disconnect the negative battery terminal.
2. Remove the center differential lock sensor switch.
3. Check continuity between terminals in LOCK and FREE position.

Motor	a	b
Free		
Lock	○	○

○—○: Indicates continuity

REPLACEMENT

1. Disconnect the negative battery terminal.
2. Disconnect the connector of the center differential lock sensor switch.
3. Replace the switch.

Tightening torque:
20—29 N·m (2.0—3.0 m-kg, 14—22 ft-lb)

Downloaded from www.Manualslib.com manuals search engine

AUTOMATIC TRANSAXLE AND TRANSFER (Electronically-Controlled)

INDEX K2– 2

FEATURES

OUTLINE K2– 3
- OUTLINE OF CONSTRUCTION K2– 3
- OUTLINE OF OPERATION K2– 4
- SPECIFICATIONS K2– 5
- STRUCTUAL VIEW K2– 6
- POWERFLOW DIAGRAM K2– 7
- OPERATION OF COMPONENTS K2– 8
- FLUID PASSAGE LOCATIONS K2– 9

ELECTRONIC CONTROL SYSTEM COMPONENTS . K2– 11
- SYSTEM DIAGRAM K2– 11
- COMPONENT DESCRIPTIONS K2– 12
- ELECTRICAL CIRCUIT K2– 13
- SOLENOID VALVE OPERATION TABLE K2– 14

SELF-DIAGNOSIS SYSTEM K2– 15
- SELF-DIAGNOSIS FUNCTION K2– 16
- DISPLAY OF MALFUNCTION CODE K2– 16

SHIFT CONTROL K2– 18
- SHIFT PATTERN K2– 18
- HIGH ATF TEMPERATURE DETERMINATION K2– 19

SERVICE

TROUBLESHOOTING GUIDE K2– 20
- GENERAL NOTES K2– 20
- QUICK DIAGNOSIS CHART K2– 21
- USING THIS SECTION K2– 24
- SYMPTOM TROUBLESHOOTING K2– 28

SELF-DIAGNOSIS FUNCTION K2–104
- DESCRIPTION K2–104
- PREPARATION K2–104
- EC-AT TESTER K2–104
- MALFUNCTION CODE NUMBER K2–106
- GENERAL NOTES K2–107

ELECTRONIC SIGNAL INSPECTION K2–115
- INSPECTION PROCEDURE K2–115

MECHANICAL SYSTEM TEST K2–119
- PREPARATION K2–119
- STALL TEST K2–119
- TIME LAG TEST K2–122
- LINE PRESSURE TEST K2–123
- THROTTLE PRESSURE TEST K2–125

ROAD TEST K2–127
- D-RANGE TEST K2–127
- S-RANGE TEST K2–129
- L-RANGE TEST K2–130
- P-RANGE TEST K2–131

AUTOMATIC TRANSAXLE FLUID K2–134
- ATF K2–134

TRANSFER CARRIER OIL K2–136
- INSPECTION K2–136
- REPLACEMENT K2–136

THROTTLE CABLE K2–137
- PREPARATION K2–137
- THROTTLE CABLE K2–137

ELECTRONIC SYSTEM COMPONENTS K2–140
- HOLD SWITCH K2–140
- INHIBITOR SWITCH K2–140
- ATF THERMOSWITCH K2–142
- PULSE GENERATOR K2–142
- SPEED SENSOR K2–143
- SOLENOID VALVE K2–143
- EC-AT CONTROL UNIT K2–144
- WIRE HARNESS K2–146

TRANSAXLE AND TRANSFER K2–147
- TRANSAXLE AND TRANSFER ASSEMBLY K2–147
- TRANSAXLE AND TRANSFER UNIT (DISASSEMBLY) K2–152
- TORQUE CONVERTER K2–167
- OIL PUMP K2–168
- CLUTCH ASSEMBLY K2–173
- SMALL SUN GEAR AND ONE-WAY CLUTCH K2–182
- ONE-WAY CLUTCH CARRIER HUB ASSEMBLY K2–185
- 3-4 CLUTCH K2–187
- LOW AND REVERSE BRAKE K2–192
- 2-4 BRAKE BAND, SERVO K2–197
- 2-3 ACCUMULATOR K2–200
- IDLER GEAR (TRANSAXLE) K2–202
- OUTPUT GEAR K2–205
- BEARING COVER ASSEMBLY K2–207
- OIL SEAL (TRANSAXLE) ..... SECTION J3
- CONTROL VALVE BODY (DISASSEMBLY / INSPECTION) K2–209
- PREMAIN CONTROL VALVE BODY K2–214
- CONTROL VALVE BODY K2–218
- REAR CONTROL VALVE BODY K2–222
- CONTROL VALVE BODY (ASSEMBLY) K2–225
- CONTROL VALVE BODY (ON-VEHICLE REMOVAL / INSTALLATION) K2–235
- IDLER GEAR ASSEMBLY (TRANSFER) K2–237
- FRONT AND CENTER DIFFERENTIAL ASSEMBLY K2–240
- TRANSFER CARRIER ASSEMBLY K2–245
- BEARING PRELOAD K2–253
- TRANSAXLE AND TRANSFER UNIT (ASSEMBLY) K2–259
- INSTALLATION K2–276

OIL COOLER K2–280
- OIL COOLER K2–280

HYDRAULIC CIRCUIT K2–281
- P RANGE K2–281
- R RANGE K2–282
- N RANGE; BELOW APPROX. 18 km/h (11 mph) K2–283
- N RANGE; ABOVE APPROX. 18 km/h (11 mph) K2–284
- D RANGE; 1ST GEAR K2–285
- D RANGE; 2ND GEAR K2–286
- D RANGE; 3RD GEAR, BELOW APPROX. 40 km/h (25 mph) K2–287
- D RANGE; 3RD GEAR, ABOVE APPROX. 40 km/h (25 mph) K2–288
- D RANGE; 4TH GEAR LOCKUP ON K2–289
- S RANGE; 1ST GEAR K2–290
- S RANGE; 2ND GEAR K2–291
- S RANGE; HOLD 2ND GEAR K2–292
- S RANGE; 3RD GEAR, BELOW APPROX. 40 km/h (25 mph) K2–293
- S RANGE; 3RD GEAR, ABOVE APPROX. 40 km/h (25 mph) K2–294
- L RANGE; 1ST GEAR K2–295
- L RANGE; HOLD 1ST GEAR K2–296
- L RANGE; 2ND GEAR, BELOW APPROX. 110 km/h (68 mph) K2–297
- L RANGE; 2ND GEAR, ABOVE APPROX. 110 km/h (68 mph) K2–298

03U0K2-001

Downloaded from www.Manualslib.com manuals search engine

INDEX

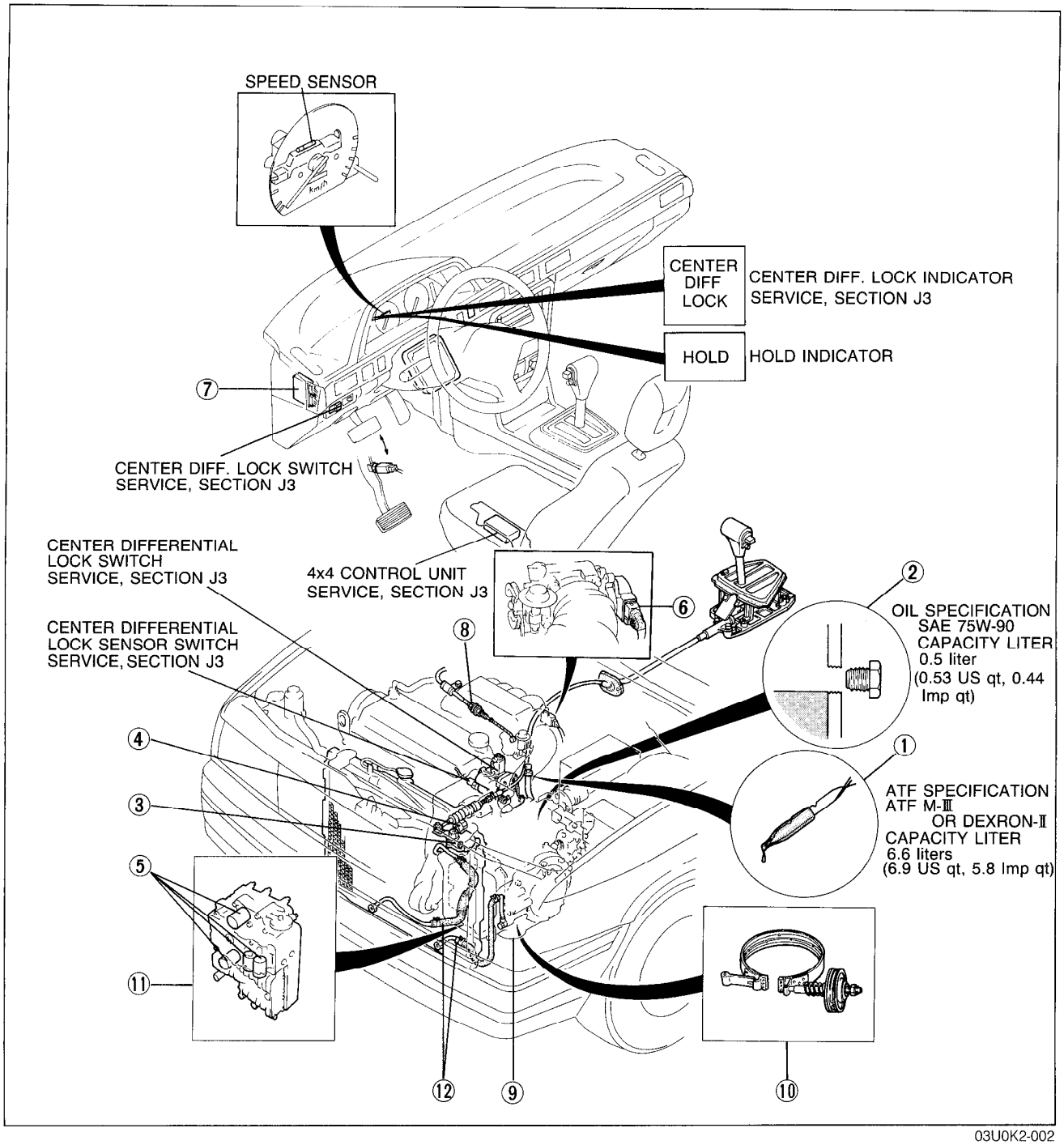

03U0K2-002

1. ATF
   Inspection / Replacement ..... page K2–134
2. Transfer carrier oil
   Inspection / Replacement ..... page K2–136
3. Inhibitor switch
   Inspection / Replacement / Adjustment page K2–140
4. ATF thermoswitch
   Inspection .... page K2–142
5. Solenoid valves
   Inspection / Replacement ..... page K2–143
6. Throttle sensor
7. EC-AT control unit
   Inspection .... page K2–144
8. Throttle cable
   Inspection / Replacement / Adjustment. page K2–137
9. Transaxle and transfer
   Removal / Installation ..... page K2–147
10. 2–4 brake band
    Adjustment... page K2–199
11. Control valve body assembly
    Disassembly / Inspection ..... page K2–209
    Assembly ..... page K2–225
    On-vehicle removal / Installation .. page K2–235
12. Oil cooler
    Removal / Inspection / Installation .. page K2–280

Downloaded from www.Manualslib.com manuals search engine

OUTLINE

OUTLINE OF CONSTRUCTION

- The newly developed EC-AT (G4AX-EL) with Full-time 4-wheel-drive (4WD) is based upon the 1989 626 EC-AT (G4A-EL).
  This new transaxle and transfer carrier has been made available for the 1990 323 for improved driveability and roadability.
- The construction and operation of the transaxle is the same as the 1989 626 EC-AT (G4A-EL). The Construction and operation of the transfer unit and carrier are basically the same as the 1989 323 with 4WD. The electronic control system of EC-AT is the same as the 1989 626 EC-AT (G4A-EL) non-turno model.
- The center differential employs a planetary carrier system, and functions to distribute the driving force to the front and rear differentials.
- The electronically controlled, lockable center differential means all driving conditions are easily contended with; from good road to bad roads and inclement weather.
- To improve serviceability, the EC-AT control unit diagnoses malfunctions of the major electrical components and outputs memorized malfunction codes by coded flashing of the HOLD indicator
  The diagnosis connector is installed in the engine compartment by the left side suspension tower.
- The 1990 323 4WD EC-AT also has a shift-lock system for improved safety.

03U0K2-003

Downloaded from www.Manualslib.com manuals search engine

OUTLINE OF OPERATION

Driving force from engine is transmitted via the drive plate and torque converter to the transaxle.
Driving force through the transaxle is applied to the center differential, from which it is distributed to the front and rear axles.
The front axle applies the driving force, via the front differential, to the left and right wheels. Driving force for the rear axle is transmitted through the transfer unit, the transfer carrier, the propeller shaft, and to the rear differential.
If the vehicle encounters very slippery conditions and one wheel starts to spin, the center differential absorbs the speed difference and the other three wheels lose driving force.
At times like this, the center differential can be locked so that the front and rear axles are directly connected and driving force is transmitted to both axles.

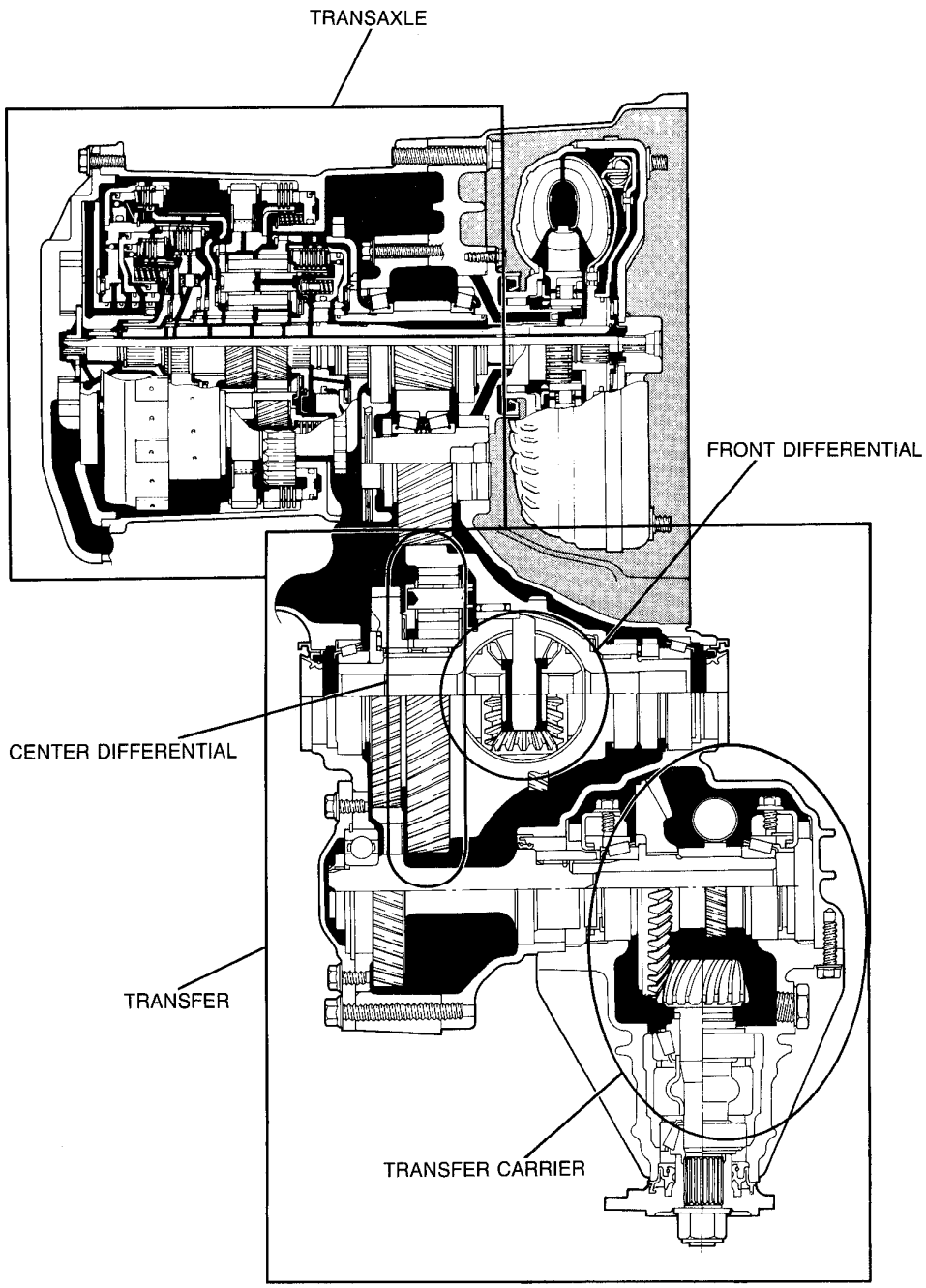

03U0K2-004

Downloaded from www.Manualslib.com manuals search engine

SPECIFICATIONS

Transaxle			
Engine model			BP SOHC (4WD)
Transaxle model			G4AX-EL
Transaxle control			Floor shift
Lockup Mechanism			Adapted
Gear ratio		1st	2.800
		2nd	1.540
		3rd	1.000
		OD (4th)	0.700
		Reverse	2.333
Final gear ratio			3.842
Center differential	Type		Planetary carrier
	Number of ring gear teeth	Outer	73
		Inner	66
	Number of pinion gear teeth	Outer	14
		Inner	14
	Number of sun gear teeth	Pinion gear side	33
		Idle gear side	50
	Number of idle gear teeth		43
Oil	Type		ATF: M-III or DEXRON-II
	Capacity liters (US qt, Imp qt)		6.6 (7.0, 5.8)
Torque converter stall torque ratio			2.7
Number of drive/ driven plates	Forward clutch		3/3
	Coasting clutch		2/2
	3-4 clutch		4/4
	Reverse clutch		2/2
	Low and reverse clutch		3/3
2-4 brake band (Piston outer dia./retainer inner dia.)			78/59
Number of planetary gear teeth	Large sun gear		36
	Small sun gear		30
	Long pinion gear		24
	Short pinion gear		22
	Internal gear		84
Number of output gear teeth			19
Number of idle gear teeth			40
Number of ring gear teeth			73
Transfer carrier			
Number of ring gear teeth			37
Number of pinion gear teeth			11
Speedometer gear ratio (Number of driven/drive gear teeth)			1.000 (22/22)
Oil	Type		API: GL-5 Above −18°C (0°F): SAE 90 Below −18°C (0°F): SAE 80W
	Capacity liter (US qt, Imp qt)		0.5 (0.52, 0.44)

03U0K2-005

Downloaded from www.Manualslib.com manuals search engine

STRUCTURAL VIEW

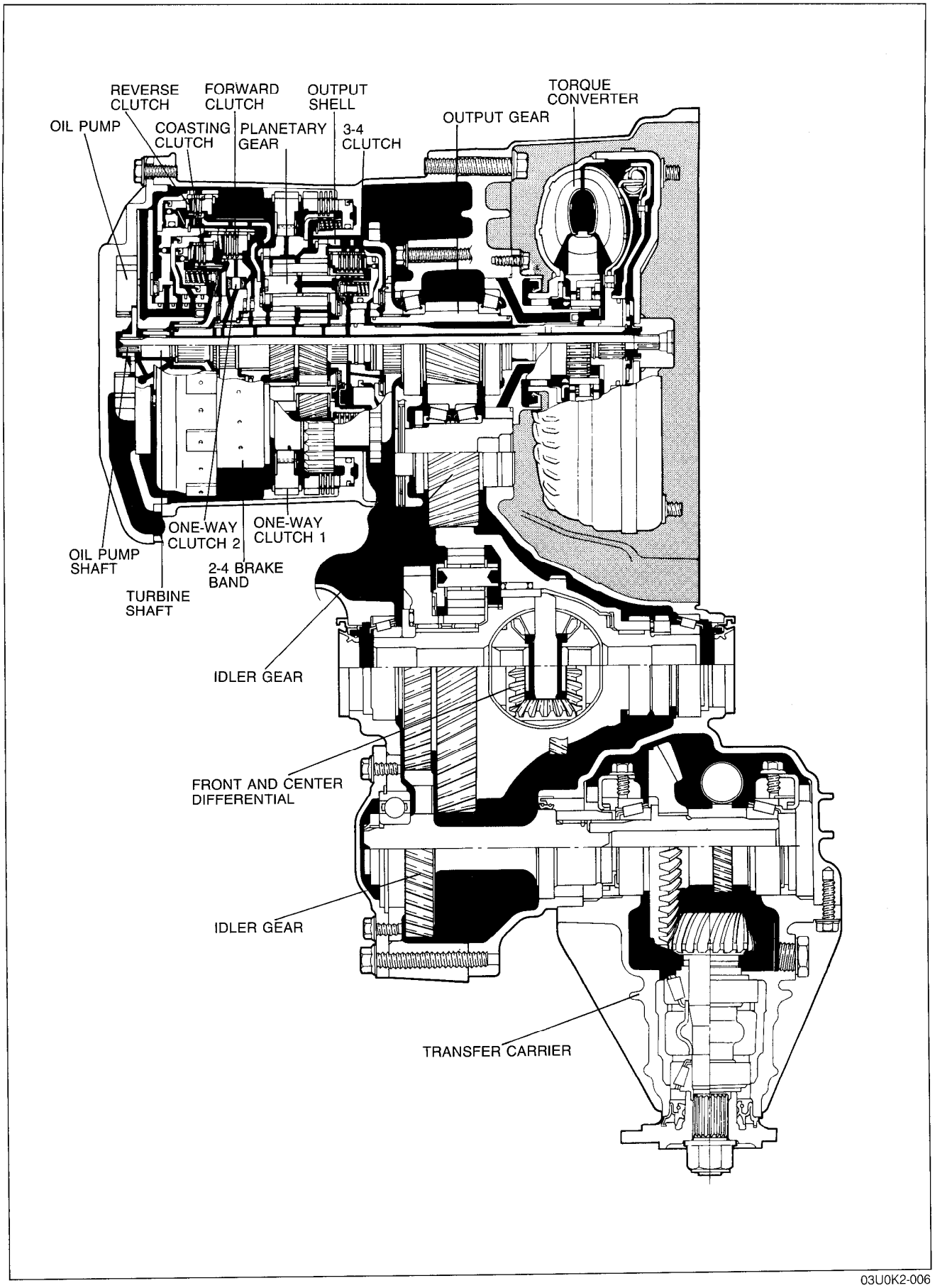

03U0K2-006

Downloaded from www.Manualslib.com manuals search engine

POWERFLOW DIAGRAM

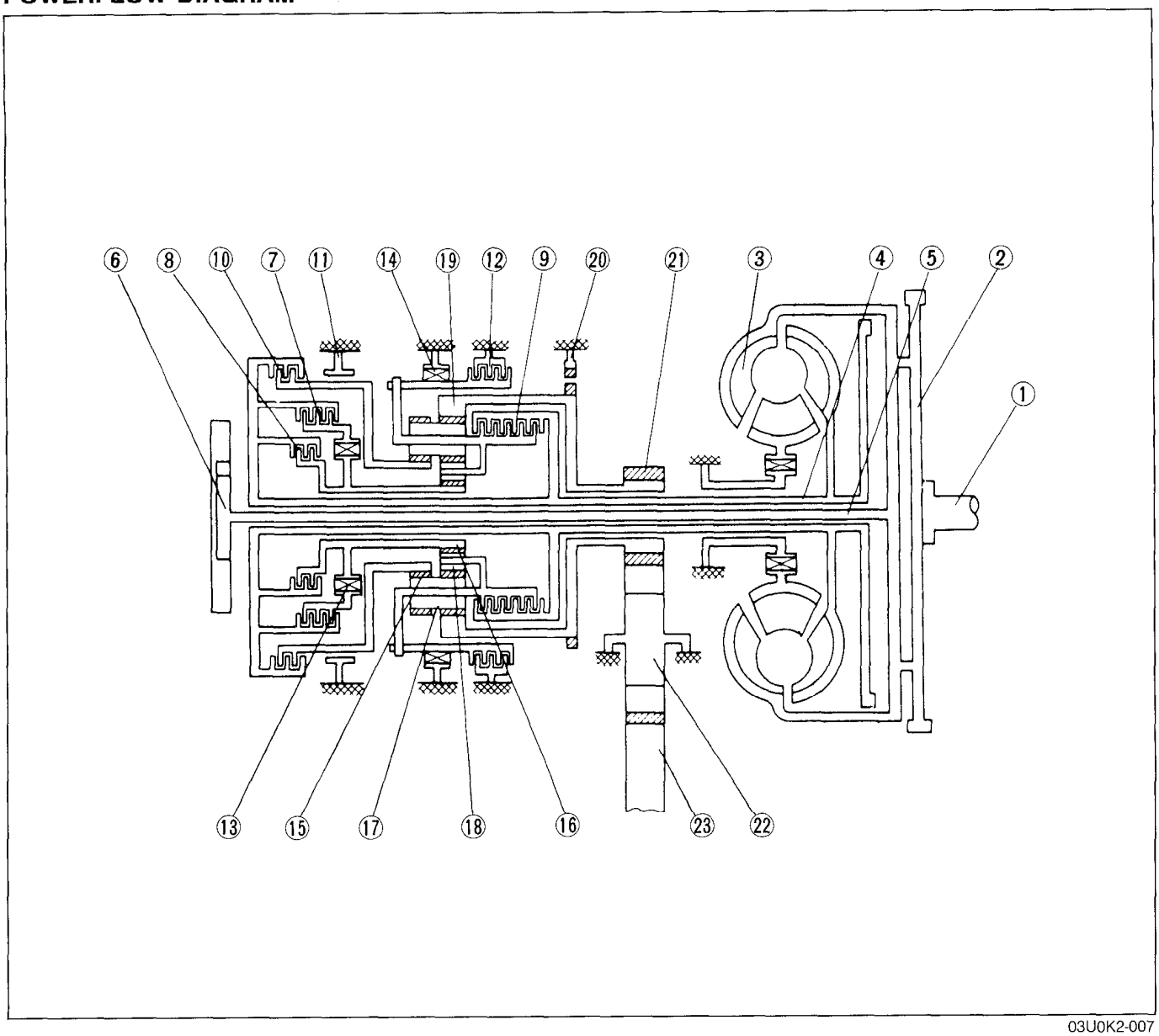

03U0K2-007

1. Crank shaft
2. Drive plate
3. Torque converter
4. Turbine shaft
5. Oil pump shaft
6. Oil pump
7. Forward clutch
8. Coasting clutch
9. 3-4 clutch
10. Reverse clutch
11. 2-4 Brake band
12. Low and reverse brake
13. One-way clutch 1
14. One-way clutch 2
15. Large sun gear
16. Small sun gear
17. Long pinion gear
18. Short pinion gear
19. Internal gear
20. Parking gear
21. Output gear
22. Idler gear
23. Ring gear

Downloaded from www.Manualslib.com manuals search engine

OPERATION OF COMPONENTS

Mode	Range	Gear position		Engine braking effect	Forward clutch	Coasting clutch	3-4 clutch	Reverse clutch	2-4 brake Applied	2-4 brake Released	Low & reverse brake	One-way clutch 1	One-way clutch 2
Normal	P	—		—									
	R	Reverse		Yes				○			○		
	N	—	Below approx. 4 km/h (2.5 mph)	—									
			Above approx. 5 km/h (3.1 mph)	—									
	D	1st		No	○							○	○
		2nd		No	○				○			○	
		3rd	Below approx. 5 km/h (3.1 mph) at operating temperature	Yes	○	○	○			○		○	
			Above approx. 5 km/h (3.1 mph) or cold engine	Yes	○	○	○		⊗	○		○	
		OD	Lockup OFF	Yes	○		○		○			◎	
			Lockup ON	Yes									
	S	1st		No	○							○	○
		2nd		No	○				○			○	
		3rd	Below approx. 5 km/h (3.1 mph) at operating temperature	Yes	○	○	○			○		○	
			Above approx. 5 km/h (3.1 mph) or cold engine	Yes	○	○	○		⊗	○		○	
		OD		Yes	○		○		○			◎	
	L	1st		No	○						○	○	
		2nd	Below approx. 110 km/h (68 mph) / Above approx. 110 km/h (68 mph)	Yes	○	○			○			○	
Hold	D	1st		No	○							○	
		2rd		No	○				○			○	
		3rd	Below approx. 5 km/h (3.1 mph) at operating temperature	Yes	○	○	○			○		○	
			Above approx. 5 km/h (3.1 mph) or cold engine	Yes	○	○	○		⊗	○		○	
		OD		Yes	○		○		○			⊗	
	S	2nd		Yes	○				○			○	
		3rd	Below approx. 5 km/h (3.1 mph) at operating temperature	Yes	○	○	○			○		○	
			Above approx. 5 km/h (3.1 mph) or cold engine	Yes	○	○	○		⊗	○		○	
		OD		Yes	○		○		○			◎	
	L	1st		Yes	○	○					○	○	
		2nd	Below approx. 110 km/h (68 mph) / Above approx. 110 km/h (68 mph)	Yes	○	○			○			○	

03U0KX-007

⊗ : Fluid pressure to servo but band not applied due to pressure difference in servo.
◎ : Does not transmit power.

Downloaded from www.Manualslib.com manuals search engine

FLUID PASSAGE LOCATIONS
Transaxle Case

INLET AND OUTLET

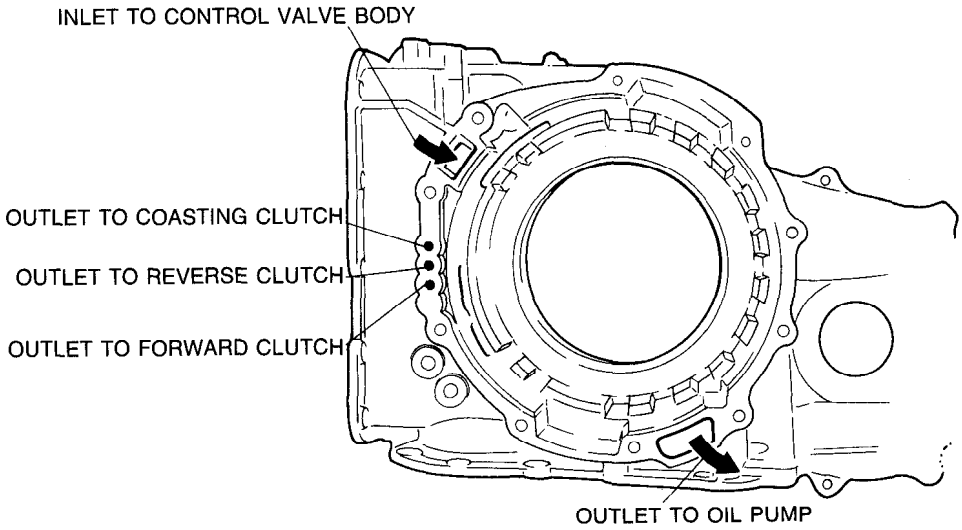

TRANSAXLE CASE

INLET

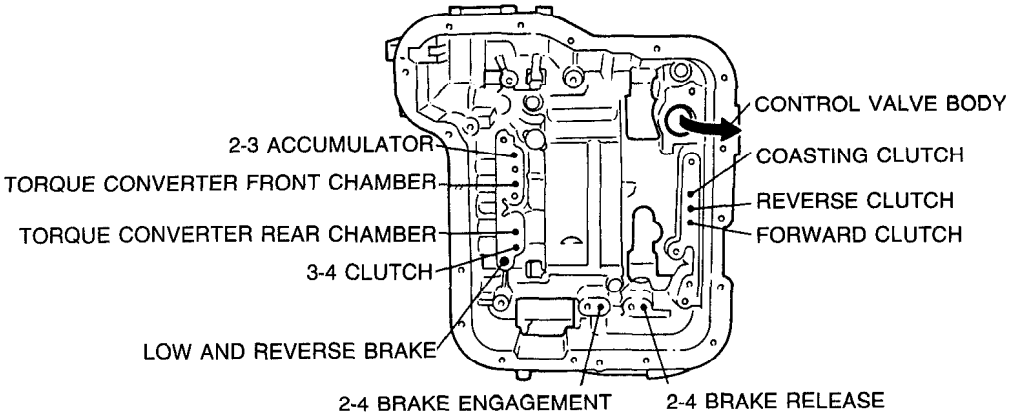

TRANSAXLE CASE

OUTLET

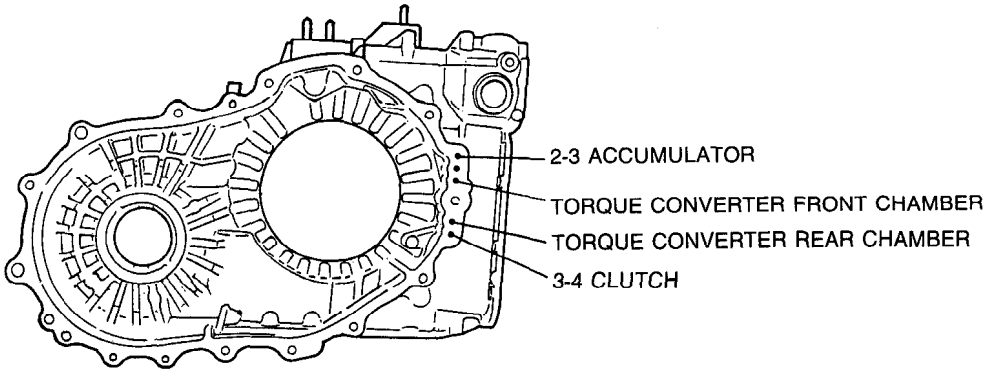

TRANSAXLE CASE

Downloaded from www.Manualslib.com manuals search engine

Clutch Housing

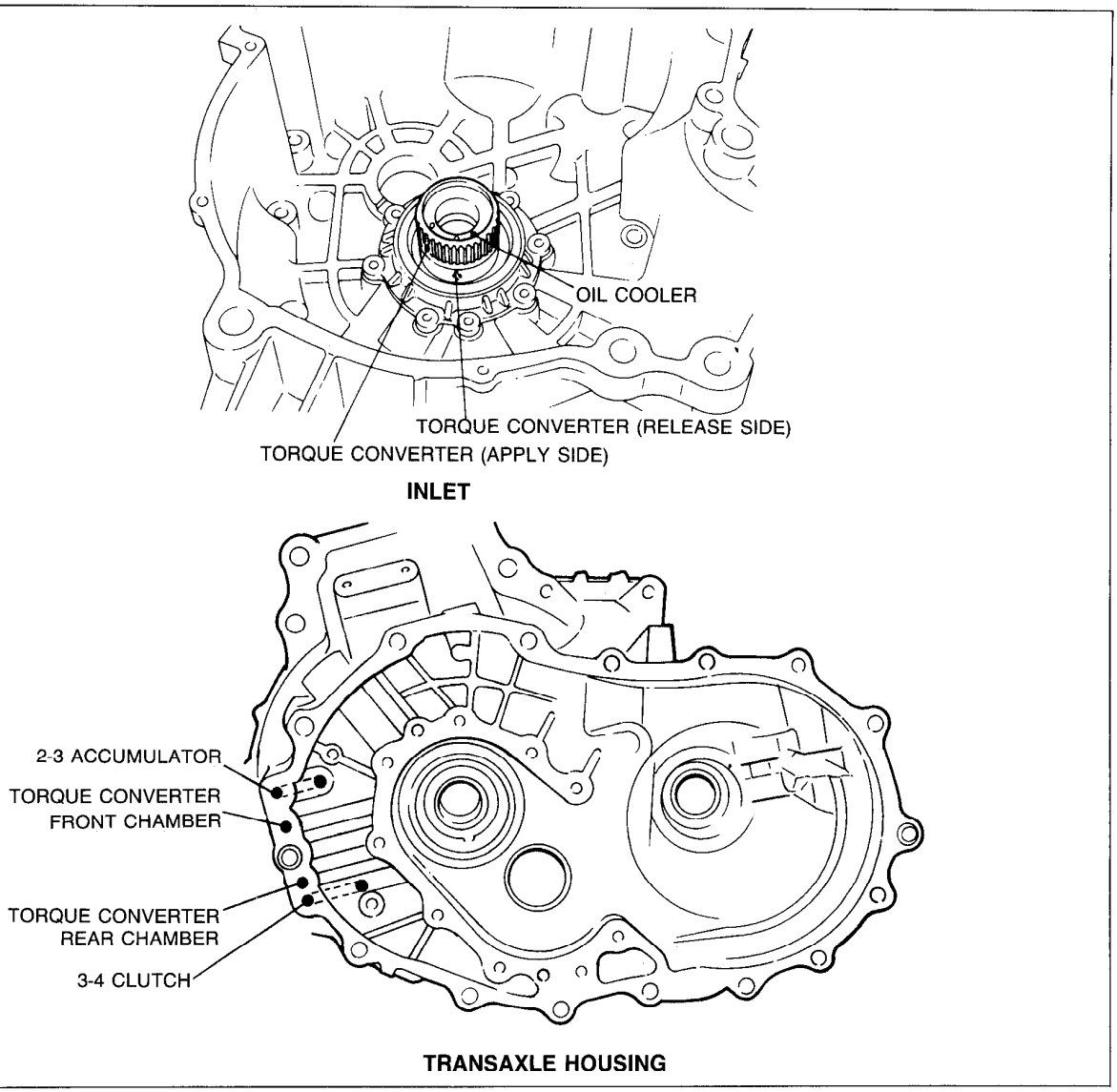

03U0KX-009

Oil Pump

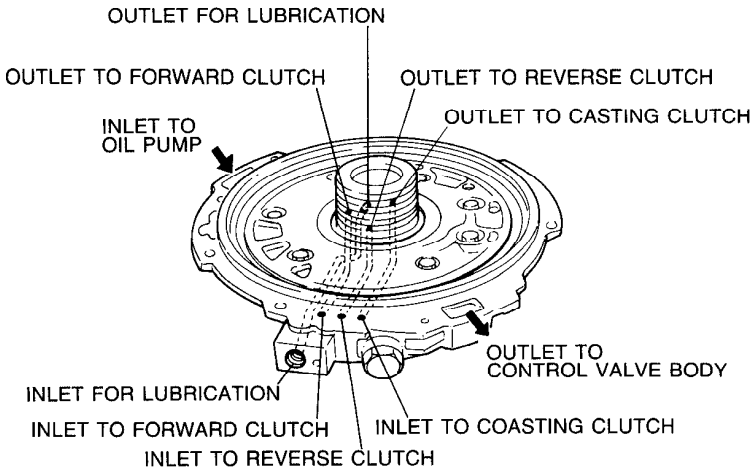

03U0KX-010

Downloaded from www.Manualslib.com manuals search engine

ELECTRONIC CONTROL SYSTEM COMPONENTS

SYSTEM DIAGRAM

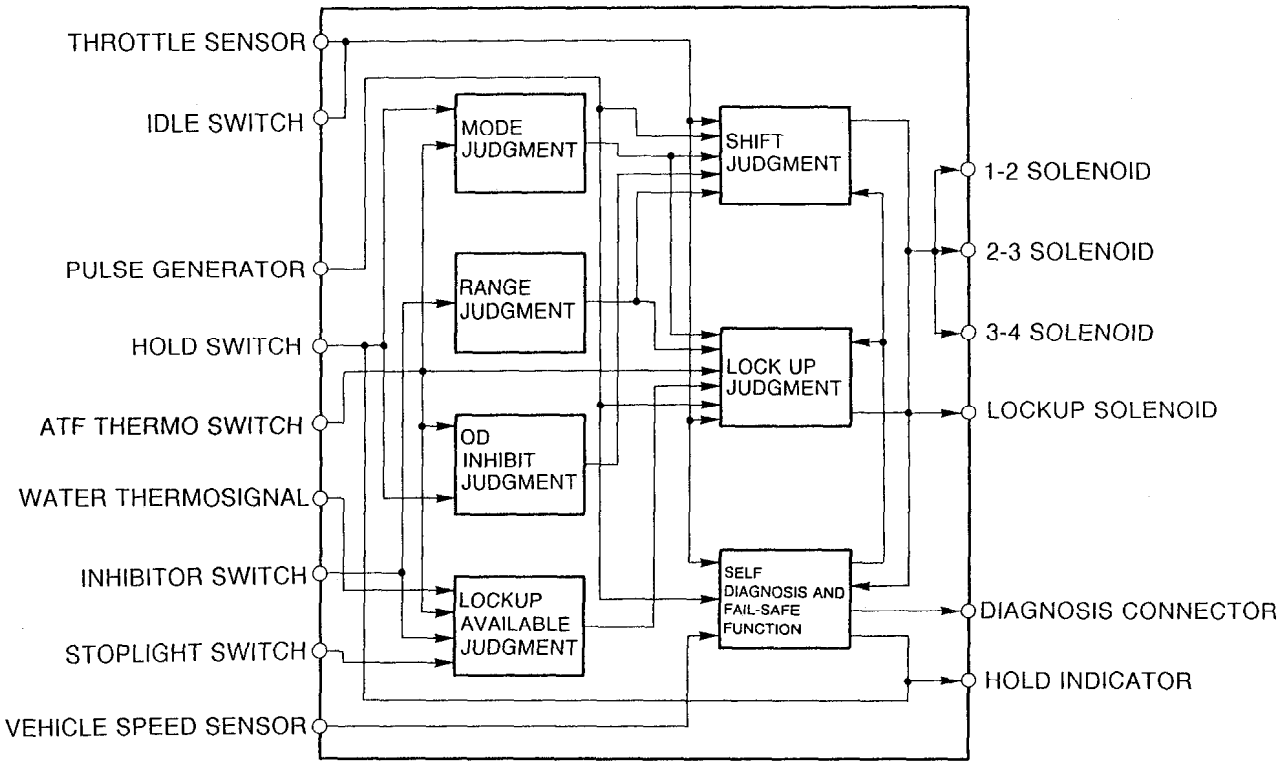

Downloaded from www.Manualslib.com manuals search engine

COMPONENT DESCRIPTIONS

Part name			Function
EC-AT control unit			Regulates shift points and lockup points according to signals from various sensors; sends ON/OFF signals to solenoid valves
Input	Pulse generator		Detects reverse and forward drum revolution speed
Input	Vehicle speed sensor		Detects vehicle speed
Input	Throttle sensor		Detects amount of throttle valve opening
Input	Idle switch		Detects throttle valve fully-closed position
Input	Inhibitor switch		Detects position (range) of gear selector
Input	Hold switch		Sets Hold mode
Input	Stoplight switch		Detects use of service brakes
Input	Water thermo signal		Indicates engine coolant temperature
Input	ATF thermoswitch		Detects automatic transaxle fluid temperature
Output	Solenoid valve		Switched ON/OFF by electrical signals from EC-AT control unit; regulates shifting and lockup actuation by switching oil passages
Output	Solenoid valve	1-2	For 1-2 shift (1st gear → 2nd gear: OFF-ON)
Output	Solenoid valve	2-3	For 2-3 shift (2nd gear → 3rd gear: ON-OFF)
Output	Solenoid valve	3-4	For 3-4 shift (3rd gear → OD: OFF-ON)
Output	Solenoid valve	Lockup	For lockup (lockup at ON)
Output	Hold indicator		Illuminates when Hold mode selected Flashes when malfunction detected as result of self-diagnosis
Output	No load signal		Send no load signal (P and N ranges) to engine control unit

03U0K2-009

Downloaded from www.Manualslib.com manuals search engine

ELECTRICAL CIRCUIT

1990 323 4WD (G4AX-EL)

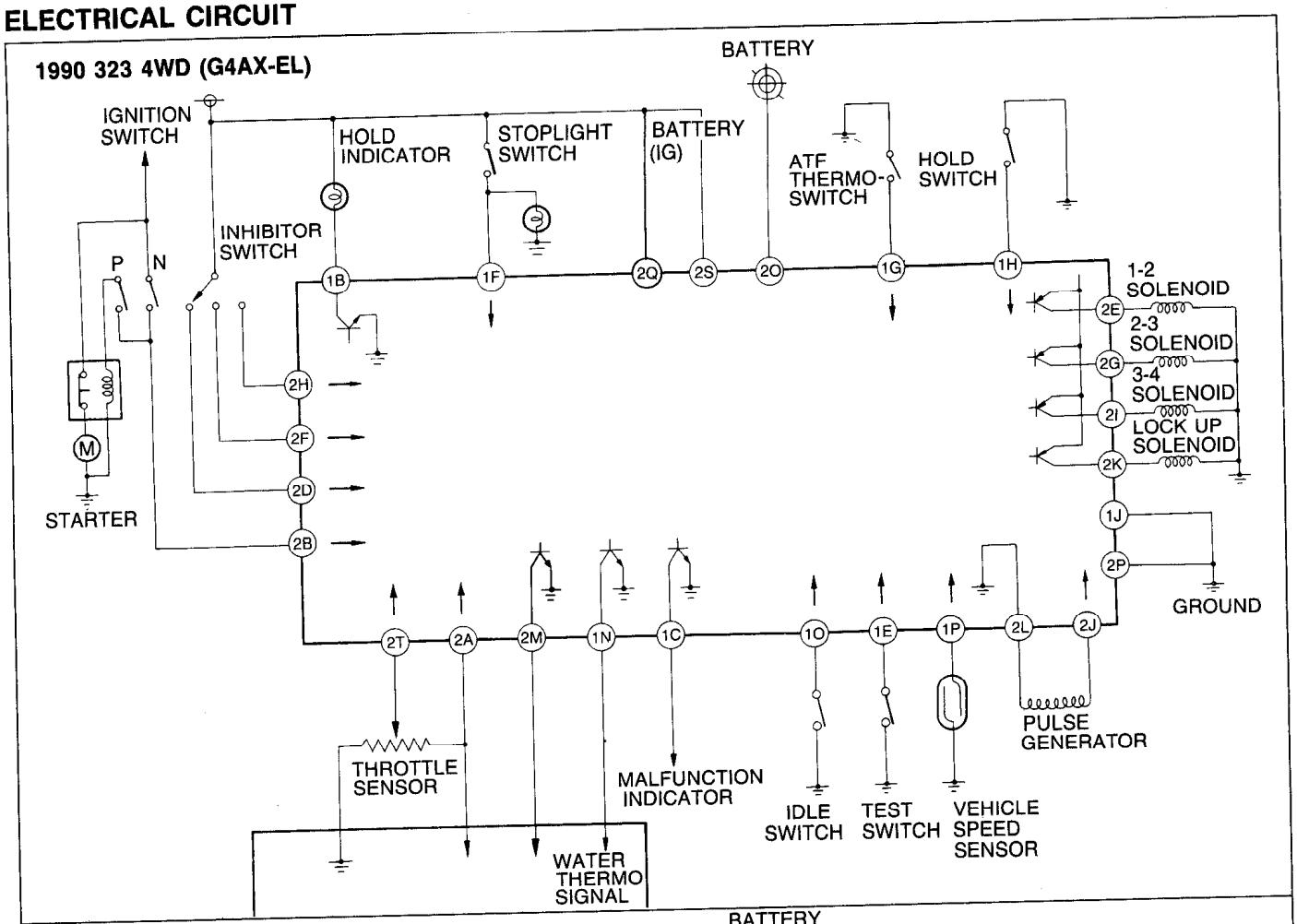

1990 323 (F4A-EL)

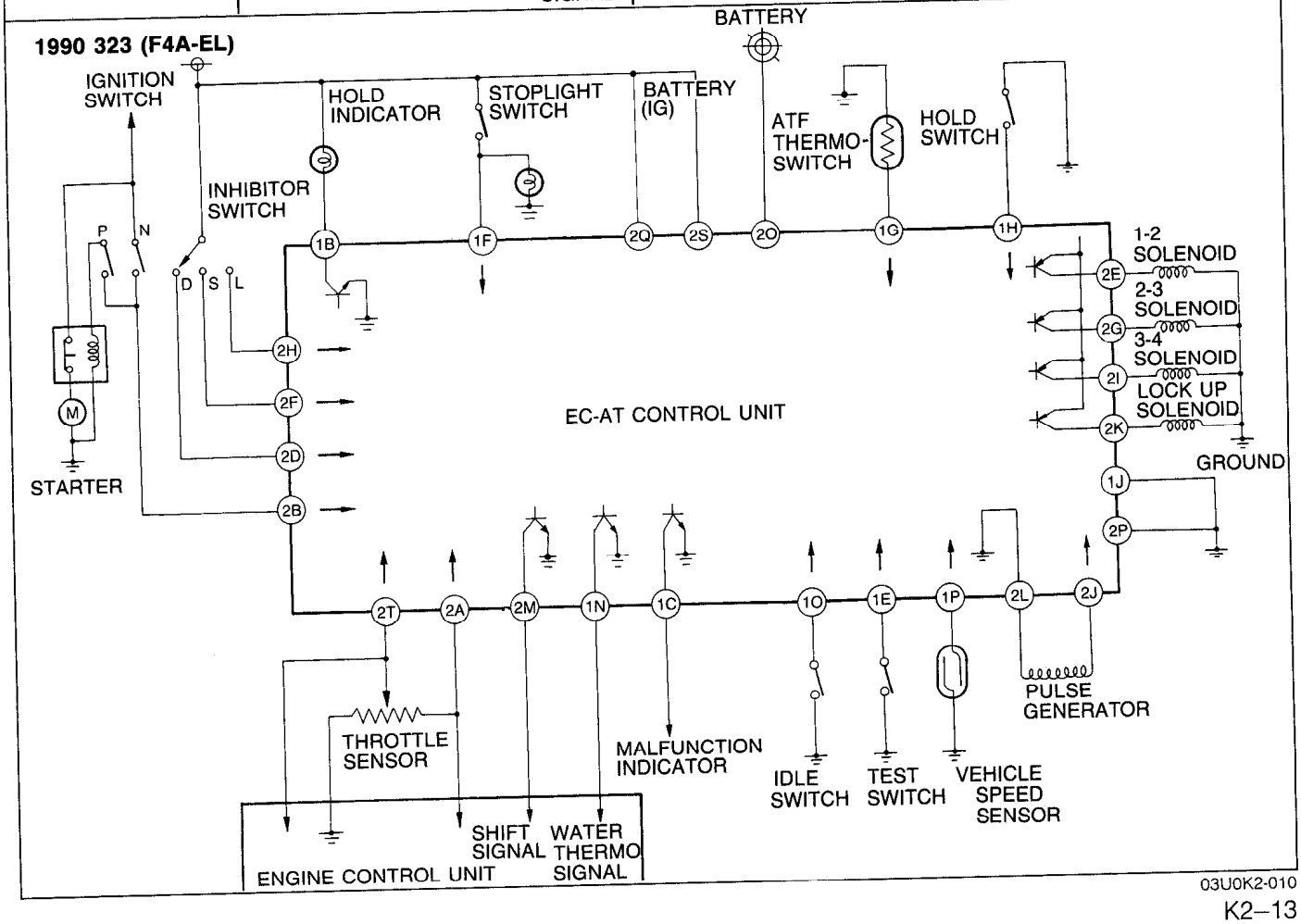

03U0K2-010

Downloaded from www.Manualslib.com manuals search engine

SOLENOID VALVE OPERATION TABLE

RANGE		GEAR		SOLENOID VALVES							
				1990 323 2WD				1990 323 4WD			
				1-2	2-3	3-4	Lockup	1-2	2-3	3-4	Lockup
P		—				ON				ON	
R		Reverse		ON				ON			
N		—	Below approx. 4 km/h (2.5 mph)			ON				ON	
			Above approx. 5 km/h (3.1 mph)	ON				ON			
D		1st			ON	ON			ON	ON	
		2nd		ON	ON	ON		ON	ON	ON	
		3rd	Below approx. 5 km/h (3.1 mph) at operating temperature								
			Above approx. 5 km/h (3.1 mph) or cold engine	ON				ON			
		OD	Lockup OFF	ON		ON		ON		ON	
			Lockup ON	ON		ON	ON	ON		ON	ON
S		1st			ON	ON			ON	ON	
		2nd		ON	ON	ON		ON	ON	ON	
		3rd	Below approx. 5 km/h (3.1 mph) at operating temperature								
			Above approx. 5 km/h (3.1 mph) or cold engine	ON				ON			
			Lockup OFF						ON		
			Lockup ON						ON		ON
		OD		ON		ON		ON		ON	
L		1st			ON	ON			ON	ON	
		2nd	Below approx. 110 km/h (68 mph)	ON	ON			ON	ON		
			Above approx. 110 km/h (68 mph)	ON				ON			
HOLD	D	1st			ON	ON		—			
		2nd		ON	ON	ON		ON	ON	ON	
		3rd	Below approx. 5 km/h (3.1 mph) at operating temperature								
			Above approx. 5 km/h (3.1 mph) or cold engine	ON				ON			
		OD		ON		ON		—			
	S	2nd		ON	ON			ON	ON		
		3rd	Below approx. 5 km/h (3.1 mph) at operating temperature								
			Above approx. 5 km/h (3.1 mph) or cold engine	ON				ON			
		OD		ON		ON		—			
	L	1st			ON				ON		
		2nd	Below approx. 110 km/h (68 mph)	ON	ON			ON	ON		
			Above approx. 110 km/h (68 mph)	ON				ON			

03U0K2-011

Downloaded from www.Manualslib.com manuals search engine

SELF-DIAGNOSIS SYSTEM

The EC-AT control unit has built-in self-diagnosis, fail-safe, and warning code display function for the main input sensors and all of the output solenoid valves.

SELF-DIAGNOSIS FUNCTION

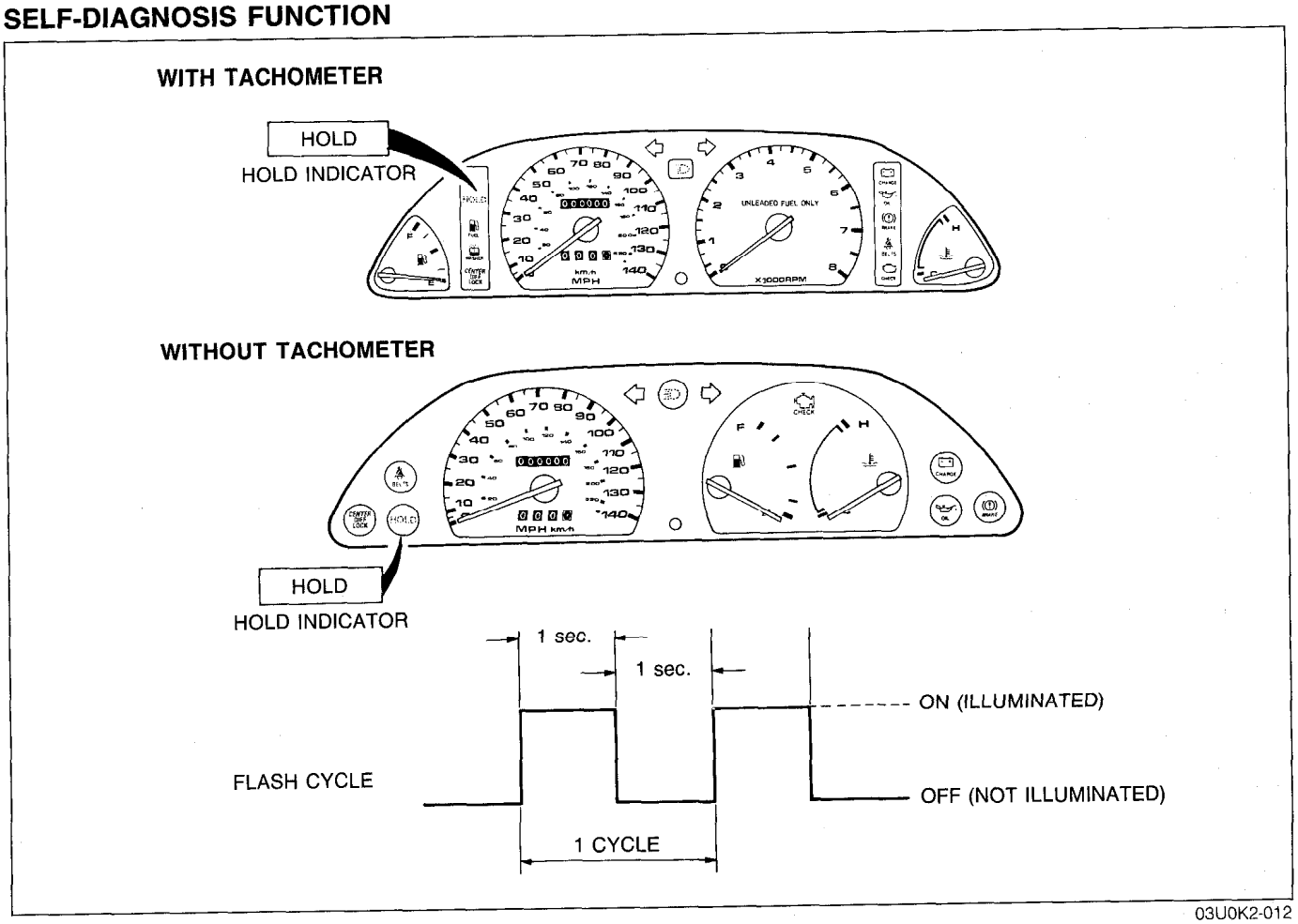

03U0K2-012

If a malfunction occurs in any of the EC-AT system components described below, the HOLD indicator flashes to warn the driver of the malfunction.

- Vehicle speed sensor.
- Throttle sensor.
- Pulse generator.
- 1-2 shift solenoid valve.
- 2-3 shift solenoid valve.
- 3-4 shift solenoid valve.
- Lockup solenoid valve.

If a condition, as shown in the table below, exists, the EC-AT control unit judges that the component has a malfunction.

Component	Conditions for judgement of malfunction
Vehicle speed sensor	No input signal from speed sensor while driving at drum speed above 600 rpm in D, S, or L range
Throttle sensor	Open circuit when accelerator pedal depressed (idle switch: OFF) or incorrect adjustment
Pulse generator	No input signal from pulse generator while driving at 40 km/h (25 mph) or higher in D, S, or L range
Solenoid valve	Open or short-circuit of transistor within EC-AT control unit or solenoid valve wire harness

03U0K2-013

Downloaded from www.Manualslib.com manuals search engine

FAIL-SAFE FUNCTION

If a malfunction occurs in any of the following components, the fail-safe function makes it possible to drive the vehicle with only slightly diminished performance. Hold mode cannot be selected while driving in the fail-safe mode.

1. Vehicle speed sensor
   Shifting is performed normally. If the pulse generator or a solenoid valve also fails, operation of all solenoid valves is canceled.
2. Throttle sensor
   The EC-AT control unit considers the throttle opening to be at 4/8 stroke. Shifting is performed in accordance with signals from the vehicle speed sensor and the shift pattern for that fail-safe mode.
   Lockup is not provided.
3. Pulse generator
   Shifting is performed in accordance with signals from the vehicle speed sensor and the shift pattern for that fail-safe mode. If a malfunction occurs at one of the solenoid valves along with a malfunction of the pulse generator, the operation of the malfunctioning valve is canceled.
4. 1-2, 2-3, or 3-4 solenoid valve
   The operation of the remaining solenoid valve(s) performs the shifting with as little interference as possible with driving performance. If a malfunction occurs at all four solenoid valves, 3rd, 1st and reverse gears are obtained hydraulically.

   Note
   - **If all solenoid valves are switched OFF, D and S ranges become 3rd gear position, L range becomes 1st gear position, and R range remains reverse gear position.**

5. Lockup solenoid valve
   The solenoid valves for shifting operate normally but no lockup is obtained.

03U0K2-014

DISPLAY OF MALFUNCTION CODE

If a malfunction occurs in components which the EC-AT control unit can diagnose, the control unit causes the HOLD indicator to flash while the malfunction is continuing. At the same time, the control unit memorizes the code of the malfunction for later retrieval with the **EC-AT Tester** and **System Selector**.
The flashing of the HOLD indicator ceases if the malfunction recovers.
When the TAT and GND terminals of the diagnosis connector are jumped with the ignition switch ON, the EC-AT control unit outputs any memorized malfunction codes by flashing the HOLD indicator.
The **EC-AT Tester** with **System Selector** will display these codes as malfunction code numbers when connected to the diagnosis connector.
If there is more than one malfunction, the code numbers are displayed sequentially in numerical order.

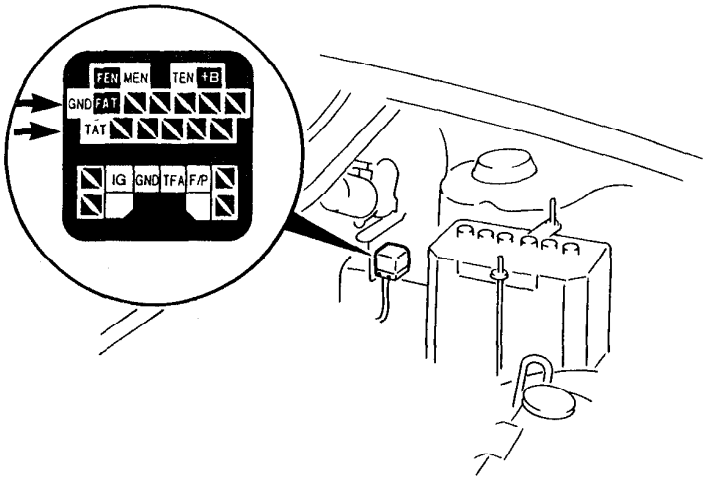

03U0K2-015

Downloaded from www.Manualslib.com manuals search engine

Malfunction Code Table

The following table shows representative malfunction code numbers and code patterns.

Malfunction	Code No.	Code pattern (HOLD indicator)
Vehicle speed sensor	06	
Throttle sensor	12	
Pulse generator	55	
1-2 shift solenoid valve	60	
2-3 shift solenoid valve	61	
2-3 shift solenoid valve	62	
Lockup solenoid valve	63	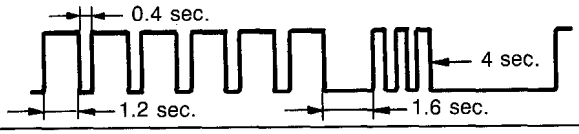

03U0K2-016

Note

- **The memory of a malfunction can be canceled by disconnecting the negative battery terminal and depressing the brake pedal for approximately 5 seconds.**

Downloaded from www.Manualslib.com manuals search engine

SHIFT CONTROL

SHIFT PATTERN

Range	Gear	Gear ratio	Normal mode			Hold mode		
			Shift	Lockup	Engine braking	Shift	Lockup	Engine braking
P	—	—						
R	Reverse	2.333			X			X
N	—	—						
D	1st	2.800	↕			↑ ↓		
	2nd	1.540	↕			↑ ↓		
	3rd	1.000	↕	X	X	↑	X	X
	OD	0.700		X	X			X
S	1st	2.800	↕					
	2nd	1.540	↕			↑		X
	3rd	1.000	↑	X	X	↑	X	X
	OD	0.700			X			X
L	1st	2.800	↕			↑		X
	2nd	1.540			X			X

⬇⬆: Will not shift unless selector button depressed.
⇩⬆: Will shift without selector button depressed.
↕: Directions of possible shift.
X: Lockup or engine braking possible.

03U0K2-017

Downloaded from www.Manualslib.com manuals search engine

HIGH ATF TEMPERATURE DETERMINATION

The ATF thermosensor sends "high-fluid-temperature" signals to the EC-AT control unit if the temperature of the ATF exceeds 128°C (262°F).
The EC-AT control unit then changes the lockup point (lower speed), available gear, and shift point (higher speed) without regard to coolant signals. The shift pattern is as shown below.
This function does not effect R or L range.

Shift Pattern at High ATF Temperature

Range	Gear	Gear ratio	Normal mode			Hold mode		
			Shift	Lockup	Engine braking	Shift	Lockup	Engine braking
P	—	—						
R	Reverse	2.333			X			X
N	—	—						
D	1st	2.800	↕			↕		
	2nd	1.540	↕			↕		
	3rd	1.000	↕	X	X	↑	X	X
	OD	0.700		X	X		X	X
S	1st	2.800	↕					
	2nd	1.540	↕			↑		X
	3rd	1.000	↑	X	X	↑		X
	OD	0.700		X	X			X
L	1st	2.800	↕			↑		X
	2nd	1.540			X			X

03U0K2-018

↕: Directions of possible shift.
X: Lockup or engine braking possible.

Downloaded from www.Manualslib.com manuals search engine

TROUBLESHOOTING GUIDE

GENERAL NOTES

A problem with the EC-AT may be caused by the engine, the EC-AT powertrain, the hydraulic control system, or the electronic control system.
When troubleshooting, therefore, begin with those points which can be inspected quickly and easily. The recommended troubleshooting sequence is described below.

03U0KX-011

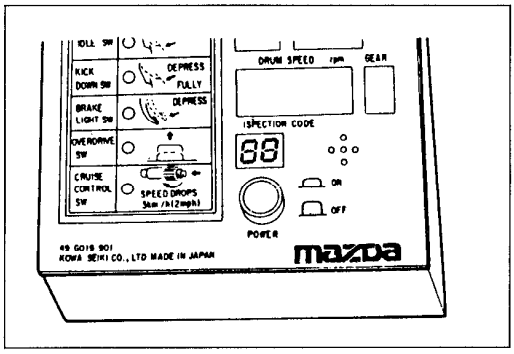

03U0K2-019

Step 1: Self-diagnosis Function

Check for malfunction code(s) memorized in the EC-AT control unit with the **EC-AT Tester**. (Refer to page K2–104.)

Note

- **Malfunction code(s) can also be checked for by the flashing sequence of the HOLD indicator lamp. (Refer to page K2–108.)**

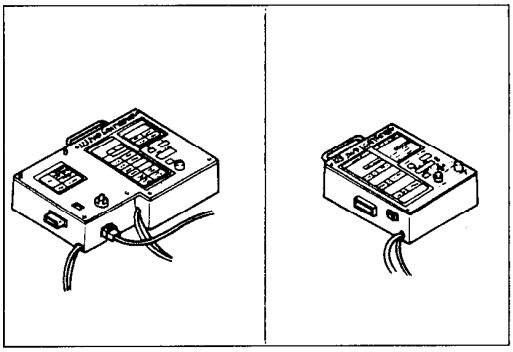

03U0K2-020

Step 2: Electric Signal Inspection

Check the signals to/from the EC-AT control unit with the **EC-AT Tester**. (Refer to page K2–144.)

Note

- **Signals can also be checked by checking the EC-AT control unit terminal voltages with a voltmeter. (Refer to page K2–115.)**

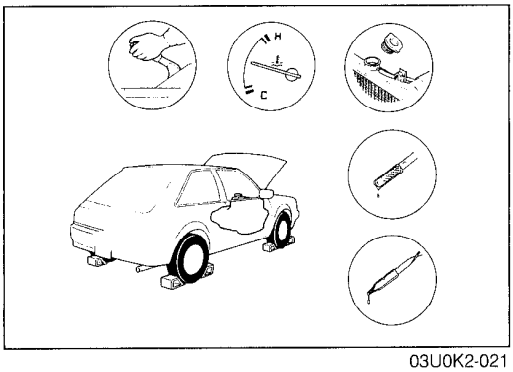

03U0K2-021

Step 3: Mechanical System Test

Check the engine stall speed, time lag, line pressure, and throttle pressure. (Refer to page K2–119.)

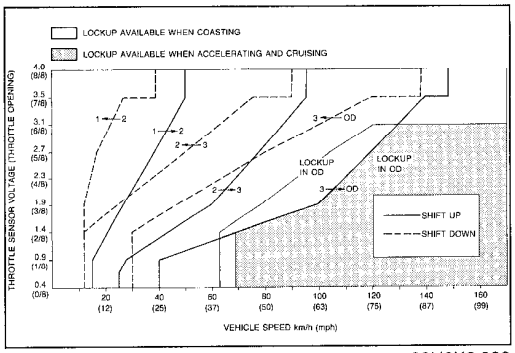

03U0K2-022

Step 4: Road Test

Note

- **For correct testing, vehicle speed, engine speed, throttle opening (throttle sensor voltage), and gear position should be checked with the EC-AT Tester.**

Check the shift point, shift schedule, and shift shock. (Refer to page K2–127.)

Downloaded from www.Manualslib.com manuals search engine

If the 4 steps on page K2–16 are followed, the cause of the problem should be located.
Another guide to faster location of the causes of problems, the QUICK DIAGNOSIS CHART, is on pages K2–17 through 19.
In this chart, numbers are used to indicate the components that may be the cause of 24 possible problems. It is necessary to check only those components indicated by numbers during each step of the troubleshooting process to locate the cause of the problem quickly.

QUICK DIAGNOSIS CHART

The Quick Diagnosis Chart shows various problems and the relationship of various components that might be the cause of the problem.

1. Components indicated in the "Self-Diag." column are diagnosed by the EC-AT control unit self-diagnosis function.
   The **EC-AT Tester** can be used for easy retrieval of these signals.
2. Components indicated in the "Adjustment" column indicate that there is a possibility that the problem may be the result of an incorrect adjustment.
   Check the adjustment of each component, and readjust if necessary.
3. Input and outout signals of the EC-AT control unit for the components indicated in the "EC-AT TESTER" column can be easily checked by using of the **EC-AT Tester**.
4. Components indicated in the "Stall Test" column can be checked for malfunction by the results of the stall test.
5. Components indicated in the "Time Lag Test" column can be checked for malfunction by the results of the time lag test.
6. Components indicated in the "Oil Pressure Test" column can be checked for malfunction by the results of the oil pressure test.
7. Components indicated in the "Road Test" column can be checked for malfunction by the results of the road test.
8. The checking, adjusting, repair or replacement procedures for each component is described in the page(s) noted in the "Reference Page" column.

03U0K2-023

Item \ Inspection point and reference page	Prelimi nary				Electronic control system													Hydraulic control system					Power train											
	K2–134	*K–264	K2–137	*Section F	*Section T	K2–140	K2–140	*Section F	*Section F	K2–145	*Section T	K2–142	K2–143	K2–143	K2–143	K2–143	K2–142	K2–197	K2–209	K2–200,209	K2–168	K2–281	K2–167	K2–173	K2–173	K2–173	K2–187	K2–197	K2–192	K2–185	K2–182	K2–164	K2–185	K2–239
	ATF level and condition	Selector lever	Throttle cable	Idle speed and ignition timing	Stoplight switch	Inhibitor switch	Hold switch	Idle switch	Throttle sensor	Water thermo signal	Vehicle speed sensor	Pulse generator	1-2 solenoid	2-3 solenoid	3-4 solenoid	Lockup soleroid	ATF thermoswitch	Band servo (2-4 brake band)	Control valves	Accumulators	Oil pump	Hydraulic circuit	Torque converter	Forward clutch	Coasting clutch	Reverse clutch	3-4 clutch	2-4 brake band	Low and reverse brake	One-way clutch 1	One-way clutch 2	Parking gear	Planetary gear	Differential assembly
Self-diagnosis									○		○	○	○	○	○	○																		
Adjustment	○	○	○	○		○		○	○									○										○						
EC-AT TESTER					○	○	○	○	○	○	○	○	○	○	○	○	○																	
Stall Test																		○	○		○		○	○		○		○		○	○			
Time Lag Test																				○				○					○					
Oil Pressure Test			○																○		○	○												
Road Test																		○						○	○		○	○	○	○		○		

* Refer to 1990 323 Workshop Manual (1195-10-89E).

Downloaded from www.Manualslib.com manuals search engine

ON-VEHICLE

Item		Inspection point and reference page	Preliminary				Electronic control system													Hydraulic control system		
			K2–134	*K–264	K2–137	*Section F	*Section T	K2–140	K2–140	*Section F	*Section F	K2–145	*Section T	K2–142	K2–143	K2–143	K2–143	K2–143	K2–142	K2–197	K2–209	K2–158
			ATF level and condition	Selector lever	Throttle cable	Idle speed and ignition timing	Stoplight switch	Inhibitor switch	Hold switch	Idle switch	Throttle sensor	Water thermo signal	Vehicle speed sensor	Pulse generator	1-2 solenoid	2-3 solenoid	3-4 solenoid	Lockup solenoid	ATF thermoswitch	Band servo (2-4 brake band)	Control valves	Accumulators
Accelerating	1	Vehicle does not move in D, S, L, and R ranges	○	○																	○	
	2	Vehicle moves in N range		○																	○	
	3	Vehicle moves in P range or parking gear not disengaged when P dis-engaged		○																		
	4	Excessive creep			○	○																
	5	No creep at all	○	○	○	○															○	
Shifting	6	No shift	○						○		○			○	○	○	○				○	
	7	Abnormal shift	○						○		○			○	○	○	○			○	○	
	8	Frequent shifting									○										○	
	9	Shift point high or low	○							○	○		○	○	○	○	○				○	
	10	No lockup					○		○		○	○		○	○	○	○	○			○	
	11	No kickdown							○		○			○	○	○	○					
Slipping	12	Engine flares or slips when accelerating vehicle	○																		○	
	13	Engine flares up or slips when upshifting or downshifting	○		○																○	
Shift shock	14	Excessive N to R or N to D range shift shock	○		○	○								○							○	○
	15	Excessive shift shock when upshifting and downshifting	○		○										○	○	○				○	○
Noise	16	Transaxle noisy in N or P ranges	○																			
	17	Transaxle noisy in D, S, L, and R ranges	○																			
Others	18	No engine braking	○												○		○				○	
	19	No mode changes							○		○		○	○	○	○	○	○	○			
	20	Transaxle overheats	○															○	○			
	21	Hold indicator lamp flashes									○		○	○	○	○	○	○				
	22	Engine will not start in N or P ranges or will start in other ranges		○				○														
	23	Engine stalls when shifted to D, S, L, and R ranges				○	○	○						○				○			○	
	24	Engine stalls when brake pedal depressed while driving at low speed or stopping				○	○							○				○	○		○	

* Refer to 1990 323 Workshop Manual (1195-10-89E).

03U0K2-024

Downloaded from www.Manualslib.com manuals search engine

OFF-VEHICLE

Hydraulic control system		Powertrain												Inspection point and reference page / Item		
K2–168	*K–270	K2–167	K2–173	K2–173	K2–173	K2–187	K2–197	K2–192	K2–185	K2–182	K2–164	K2–185	K2–239			
Oil pump	Hydraulic circuit	Torque converter	Forward clutch	Coasting clutch	Reverse clutch	3-4 clutch	2-4 brake band	Low and reverse brake	One-way clutch 1	One-way clutch 2	Parking gear	Planetary gear	Differential assembly			
○	○	○	○		○			○	○	○	○			Vehicle does not move in D, S, L, and R ranges	1	Accelerating
	○		○	○										Vehicle moves in N range	2	
											○			Vehicle moves in P range or parking gear not disengaged when P disengaged	3	
														Excessive creep	4	
○	○	○	○		○			○	○	○				No creep at all	5	
○	○													No shift	6	Shifting
	○													Abnormal shift	7	
	○													Frequent shifting	8	
	○													Shift point high or low	9	
	○	○												No lockup	10	
														No kickdown	11	
○			○		○			○	○	○				Engine flares up or slips when accelerating vehicle	12	Slipping
○	○		○			○	○		○	○				Engine flares up or slips when upshifting or downshifting	13	
	○													Excessive N to R or N to D range shift shock	14	Shift shock
	○			○		○	○							Excessive shift shock when upshifting and downshifting	15	
○		○												Transaxle noisy in N or P ranges	16	Noise
○		○										○	○	Transaxle noisy in D, S, L, and R ranges	17	
	○			○				○						No engine braking	18	Others
														No mode changes	19	
○		○												Transaxle overheats	20	
														Hold indicator lamp flashes	21	
														Engine will not start in N or P ranges or will start in other ranges	22	
		○	○											Engine stalls when shifted to D, S, L, and R ranges	23	
	○	○												Engine stalls when brake pedal depressed while driving at low speed or stopping	24	

03U0K2-025

* Refer to 1990 323 Workshop Manual (1195-10-89E).

Downloaded from www.Manualslib.com manuals search engine

USING THIS SECTION

Introduction

Most of the automatic transaxle control system is electrically controlled, often making it difficult to diagnose problems in the system, especially intermittent problems. Before undertaking actual checks, take a few minutes to talk with a customer who approaches with a drivability complaint. The customer is often a good source of information on such problems, especially intermittent ones. Through talks with the customer, one can find out what the symptoms are and under what conditions they occur.

Work Flow

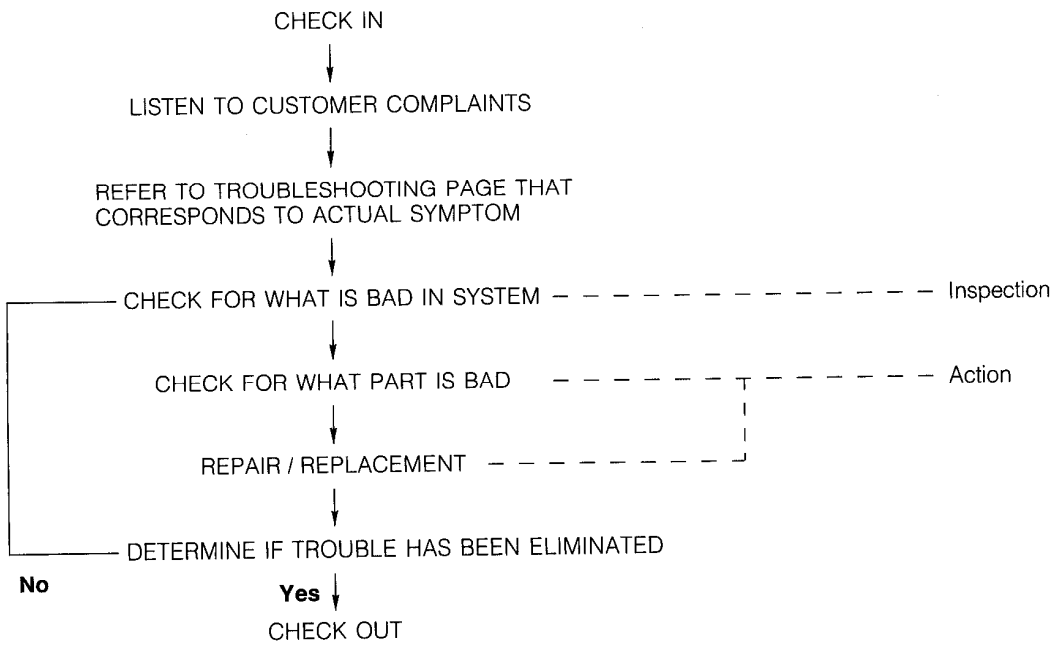

03U0KX-019

Diagnostic Index

Description:
Describes each troubleshooting item.

No.:
Each troubleshooting item is assigned a number.

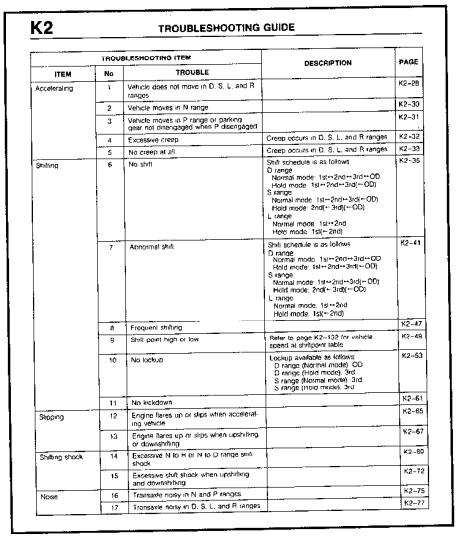

K2 TROUBLESHOOTING GUIDE

TROUBLESHOOTING ITEM			DESCRIPTION	PAGE
ITEM	No	TROUBLE		
Accelerating	1	Vehicle does not move in D, S, L, and R ranges		K2-28
	2	Vehicle moves in N range		K2-30
	3	Vehicle moves in P range or parking gear not disengaged when P disengaged		K2-31
	4	Excessive creep	Creep occurs in D, S, L, and R ranges	K2-32
	5	No creep at all	Creep occurs in D, S, L, and R ranges	K2-33
Shifting	6	No shift	Shift schedule is as follows D range Normal mode: 1st↔2nd↔3rd↔OD Hold mode: 1st↔2nd↔3rd(↔OD) S range Normal mode: 1st↔2nd↔3rd(↔OD) Hold mode: 2nd(↔3rd)(↔OD) L range Normal mode: 1st↔2nd Hold mode: 1st(↔2nd)	K2-35
	7	Abnormal shift	Shift schedule is as follows D range Normal mode: 1st↔2nd↔3rd↔OD Hold mode: 1st↔2nd↔3rd(↔OD) S range Normal mode: 1st↔2nd↔3rd(↔OD) Hold mode: 2nd(↔3rd)(↔OD) L range Normal mode: 1st↔2nd Hold mode: 1st(↔2nd)	K2-41
	8	Frequent shifting		K2-47
	9	Shift point high or low	Refer to page K2-132 for vehicle speed at shiftpoint table	K2-49
	10	No lockup	Lockup available as follows: D range (Normal mode): OD D range (Hold mode): 3rd S range (Normal mode): 3rd S range (Hold mode): 3rd	K2-53
	11	No lockdown		K2-61
Stepping	12	Engine flares up or slips when accelerating vehicle		K2-65
	13	Engine flares up or slips when upshifting or downshifting		K2-67
Shifting shock	14	Excessive N to R or N to D range shift shock		K2-70
	15	Excessive shift shock when upshifting and downshifting		K2-72
Noise	16	Transaxle noisy in N and P ranges		K2-75
	17	Transaxle noisy in D, S, L, and R ranges		K2-77

Page:
Shows the reference page.

Troubleshooting Item:
There are 24 troubleshooting items. Choose the item that most closely corresponds to the actual symptom.

03U0KX-020

Downloaded from www.Manualslib.com manuals search engine

Troubleshooting chart

1	VEHICLE DOES NOT MOVE IN D, S, L, AND R RANGES
DESCRIPTION	• *Vehicle does not move when accelerator depressed, engine speed increases*

[TROUBLESHOOTING HINTS]

① ATF level low
② Selector lever installation or adjustment incorrect
③ Powertrain slippage (Forward clutch, one-way clutch 1, one-way clutch 2, low and reverse brake or reverse clutch)
④ Control valve stuck (Manual valve or pressure regulator valve)
⑤ Oil pump worn
⑥ Torque converter worn
⑦ Hydraulic circuit clogged or leaking (Forward clutch, reverse clutch or low and reverse brake)
⑧ Parking mechanism malfunction

STEP	INSPECTION		ACTION
1	Check if ATF level is OK ☞ **page K2–134** **Level:** **Between notches on HOT side of level gauge at 65°C (149°F)**	Yes	Go to next step
		No	Add ATF to specified level ☞ **page K2–134**

05U0FX-021

DESCRIPTION:
Further describes the symptom. Confirm that the chart addresses the actual symptom before beginning troubleshooting.

TROUBLESHOOTING HINTS:
This describes the possible point of malfunction.

STEP:
This shows the order of troubleshooting. Proceed with troubleshooting as indicated.

INSPECTION:
This describes an inspection to quickly determine the malfunction of parts. If a detailed procedure is necessary to perform the INSPECTION, refer to the page shown by the "☞" mark.

ACTION:
This recommends the appropriate action to take as a result (Yes/No) of the INSPECTION. How to perform the action is described on the reference page shown by the "☞" mark.

03U0KX-022

Downloaded from www.Manualslib.com manuals search engine

TROUBLESHOOTING ITEM			DESCRIPTION	PAGE
ITEM	No	TROUBLE		
Accelerating	1	Vehicle does not move in D, S, L, and R ranges		K2–28
	2	Vehicle moves in N range		K2–30
	3	Vehicle moves in P range or parking gear not disengaged when P disengaged		K2–31
	4	Excessive creep	Creep occurs in D, S, L, and R ranges	K2–32
	5	No creep at all	Creep occurs in D, S, L, and R ranges	K2–33
Shifting	6	No shift	Shift schedule is as follows: D range Normal mode: 1st↔2nd↔3rd↔OD Hold mode: 1st↔2nd↔3rd(←OD) S range Normal mode: 1st↔2nd↔3rd(←OD) Hold mode: 2nd(←3rd)(←OD) L range Normal mode: 1st↔2nd Hold mode: 1st(←2nd)	K2–35
	7	Abnormal shift	Shift schedule is as follows: D range Normal mode: 1st↔2nd↔3rd↔OD Hold mode: 1st↔2nd↔3rd(←OD) S range Normal mode: 1st↔2nd↔3rd(←OD) Hold mode: 2nd(←3rd)(←OD) L range Normal mode: 1st↔2nd Hold mode: 1st(←2nd)	K2–41
	8	Frequent shifting		K2–47
	9	Shift point high or low	Refer to page K2–132 for vehicle speed at shiftpoint table	K2–49
	10	No lockup	Lockup available as follows: D range (Normal mode): OD D range (Hold mode): 3rd S range (Normal mode): 3rd S range (Hold mode): 3rd	K2–53
	11	No kickdown		K2–61
Slipping	12	Engine flares up or slips when accelerating vehicle		K2–65
	13	Engine flares up or slips when upshifting or downshifting		K2–67
Shifting shock	14	Excessive N to R or N to D range shift shock		K2–69
	15	Excessive shift shock when upshifting and downshifting		K2–72
Noise	16	Transaxle noisy in N and P ranges		K2–75
	17	Transaxle noisy in D, S, L, and R ranges		K2–77

Downloaded from www.Manualslib.com manuals search engine

TROUBLESHOOTING ITEM			DESCRIPTION	PAGE
ITEM	No	TROUBLE		
Others	18	No engine braking	Engine braking is available as follows: D range Normal mode: 3rd, OD Hold mode: 3rd, (OD) S range Normal mode: 3rd, (OD) Hold mode: 2nd, (3rd), (OD) L range Normal mode: 2nd Hold mode: 1st, (2nd)	K2–79
	19	No mode changes		K2–83
	20	Transaxle overheats		K2–88
	21	Hold indicator lamp flashes	Hold indicator flashes if a malfunction occurs of any of components as follows: • Vehicle speed sensor • Throttle sensor • Pulse generator • Solenoid valves (1-2, 2-3, 3-4, or lockup)	K2–92
	22	Engine will not start in N or P ranges or will start in other ranges		K2–93
	23	Engine stalls when shifted to D, S, L, and R ranges	Engine will start and run in P, or N ranges	K2–95
	24	Engine stalls when brake pedal depressed while driving at low speed or stopping		K2–100

03U0K2-026

Downloaded from www.Manualslib.com manuals search engine

SYMPTOM TROUBLESHOOTING

1	VEHICLE DOES NOT MOVE IN D, S, L, AND R RANGES
DESCRIPTION	• Vehicle does not move when accelerator depressed, engine speed increases

[TROUBLESHOOTING HINTS]

① ATF level low
② Selector lever installation or adjustment incorrect
③ Powertrain slippage (Forward clutch, one-way clutch 1, one-way clutch 2, low and reverse brake or reverse clutch)
④ Control valve stuck (Manual valve or pressure regulator valve)
⑤ Oil pump worn
⑥ Torque converter worn
⑦ Hydraulic circuit clogged or leaking (Forward clutch, reverse clutch or low and reverse brake)
⑧ Parking mechanism malfunction

STEP	INSPECTION		ACTION
1	Check if ATF level is OK ☞ **page K2–134** **Level:** **Between notches on HOT side of level gauge at 65°C (149°F)** 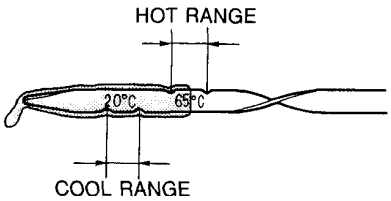 	Yes	Go to next step
		No	Add ATF to specified level ☞ **page K2–134**
2	Check if ATF condition is OK ☞ **page K2–134** ① Clear pink: Normal condition ② Dark or black (with friction material): Worn powertrain components ③ Milky pink: Water contamination ④ Light to dark brown (Oxidation): Overheated or old fluid 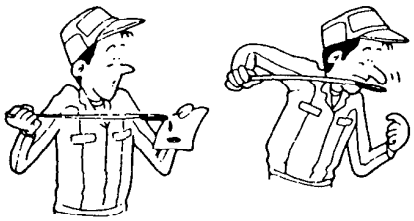	Yes	Go to next step
		No	No.2 condition Overhaul transaxle and repair or replace parts as necessary ☞ **page K2–134** No.3 or No.4 condition Replace ATF
3	Check if selector lever operation is OK ☞ **page *K–264** 	Yes	Go to next step
		No	Adjust or repair selector lever ☞ **page *K–264**

* Refer to 1990 323 Workshop Manual (1195-10-89E).

Downloaded from www.Manualslib.com manuals search engine

STEP	INSPECTION		ACTION
4	Set selector lever in P range with vehicle on a gentle slope, release brakes, and check if vehicle rolls 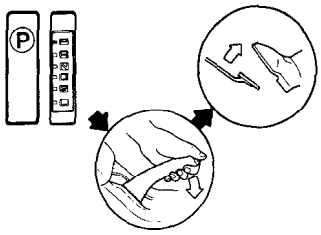	Yes	Check parking mechanism ⇨ If OK, go to next step ⇨ If not OK, repair of replace parking mechanism
		No	Go to next step
5	Check if line pressure and throttle pressure are within specification ☞ **page K2–123 125** **Line pressure:** Range: D,S,L — Line pressure kPa (kg/cm², psi): Idle 353—432 (3.6—4.4, 51—63); Stall 873—1,040 (8.9—10.6, 127—151) Range: R — Line pressure kPa (kg/cm², psi): Idle 598—942 (6.1—9.6, 87—137); Stall 1,668—2,011 (17.0—20.5, 242—292) **Throttle pressure:** Range: D — Throttle pressure kPa (kg/cm², psi): Idle 39—88 (0.4—0.9, 6—13); Stall 471—589 (4.8—6.0, 68—85)	Yes	Go to next step
		No	Check for cause (Refer to evaluation) ☞ **page K2–124 126**
6	Try known good control valve body assembly or replace transaxle		

03U0K2-027

Downloaded from www.Manualslib.com manuals search engine

2	VEHICLE MOVES IN N RANGE
DESCRIPTION	• Vehicle creeps at idle and shifts normally when accelerator depressed

[TROUBLESHOOTING HINTS]
① Selector lever installation or adjustment incorrect
② Powertrain slippage (Forward clutch or coasting clutch)
③ Control valve stuck (Manual valve)
④ Hydraulic circuit clogged or leaking (Forward clutch or coasting clutch)

STEP	INSPECTION		ACTION
1	Check if selector lever operation is OK ☞ **page *K–264** 	Yes	Go to next step
		No	Adjust or repair selector lever ☞ **page *K–264**
2	Check if engine stall speed is OK ☞ **page K2–119** **Engine stall speed: 2,550—2,650 rpm** 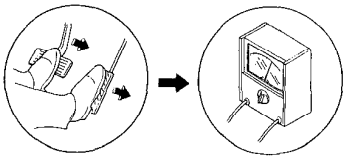	Yes	Go to next step
		No	Check for cause (Refer to Evaluation) ☞ **page K2–121**
3	Try known good EC-AT control unit, control valve body assembly, or replace transaxle		

* Refer to 1990 323 Workshop Manual (1195-10-89E).

03U0K2-028

Downloaded from www.Manualslib.com manuals search engine

3	VEHICLE MOVES IN P RANGE OR PARKING GEAR NOT DISENGAGED WHEN P DISENGAGED
DESCRIPTION	• Vehicle rolls in P range but does not accelerate when accelerator depressed • Vehicle will not move in D, S, L, and R ranges and engine in stall condition (Vehicle in stall condition)

[TROUBLESHOOTING HINTS]
① Selector lever installation or adjustment incorrect
② Parking mechanism malfunction

STEP	INSPECTION		ACTION
1	Check if selector lever operation is OK ☞ **page *K–264** 	Yes	Go to next step
		No	Adjust or repair selector lever ☞ **page *K–264**
2	Set selector lever in P range with vehicle on a gentle slope, release brakes, and check if vehicle rolls 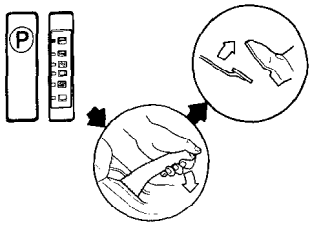 	Yes	Check parking mechanism ⇨ If OK, go to next step. ⇨ If not OK, repair of replace parking mechanism
		No	Go to next step
3	Rebuild or replace transaxle		

* Refer to 1990 323 Workshop Manual (1195-10-89E).

03U0K2-029

Downloaded from www.Manualslib.com manuals search engine

4	EXCESSIVE CREEP
DESCRIPTION	• Vehicle moves quickly in D, S, L, and R ranges without depressing accelerator **Note** **• N to R range, and N to D range shift shock felt**

[TROUBLESHOOTING HINTS]
① Engine idle speed misadjusted
② Throttle cable misadjusted

STEP	INSPECTION		ACTION
1	Check if ignition timing at idle is OK ☞ **page *F–72** **Ignition timing (BTDC): 7 ± 1°** 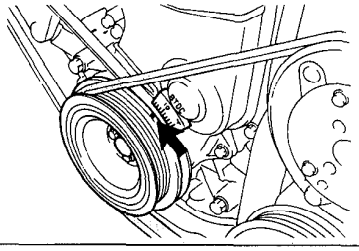	Yes	Check for correct idle speed ☞ **page *F–72** **Idle speed: 750 ± 50 rpm (with parking brake applied)** ⇨ If OK, go to next step ⇨ If not OK, adjust idle speed ☞ **page *F–72**
		No	Adjust ignition timing ☞ **page *F–72**
2	Check if throttle cable operates smoothly and is installed correctly ☞ **page K2–137** 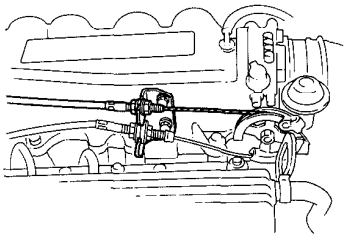	Yes	Go to next step
		No	Replace throttle cable ☞ **page K2–137**
3	Check if line pressure at idle is OK ☞ **page K2–139** **Line pressure:** **402—422 kPa** **(4.1—4.3 kg/cm², 58—61 psi)** 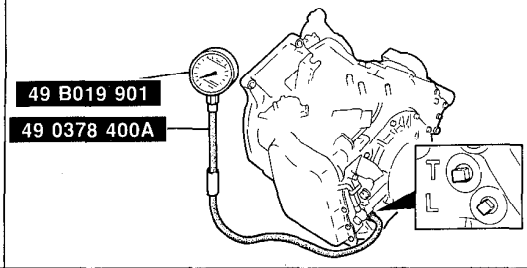	Yes	Go to next step
		No	Adjust throttle cable ☞ **page K2–139**
4	Rebuild or replace transaxle		

* Refer to 1990 323 Workshop Manual (1195-10-89E).

03U0K2-030

Downloaded from www.Manualslib.com manuals search engine

5	NO CREEP AT ALL
DESCRIPTION	• Vehicle does not move in D, S, L, and R ranges when idling • Road condition: flat paved road **Note** **• S range HOLD mode creep reduced because transaxle in 2nd gear position**

[TROUBLESHOOTING HINTS]

① ATF level low
② Powertrain slippage (Forward clutch, reverse clutch, low and reverse brake, one-way clutch 1 or one-way clutch 2)
③ Control valve stuck (Pressure regulator valve or manual valve)
④ Oil pump worn
⑤ Torque converter worn
⑥ Hydraulic circuit clogged or leaking (Forward clutch, reverse clutch, low and reverse brake, one-way clutch 1 or one-way clutch 2)

STEP	INSPECTION		ACTION
1	Check if ATF level is OK ☞ **page K2–134** **Level:** **Between notches on HOT side of level gauge at 65°C (149°F)** 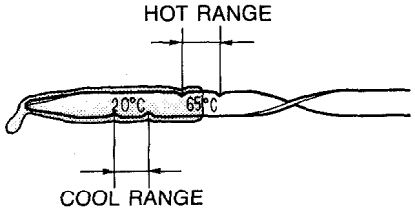	Yes	Go to next step
		No	Add ATF to specified level ☞ **page K2–134**
2	Check if ATF condition is OK ☞ **page K2–134** ① Clear pink: Normal condition ② Dark or black (with friction material): Worn powertrain components ③ Milky pink: Water contamination ④ Light to dark brown (Oxidation): Overheated or old fluid 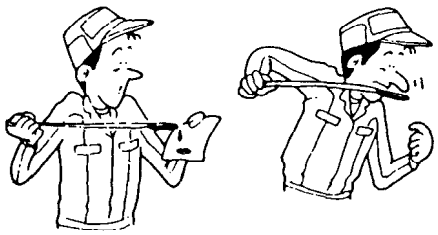	Yes	Go to next step
		No	No.2 condition Overhaul transaxle and repair or replace parts as necessary ☞ **page K2–134** No.3 or No.4 condition Replace ATF

Downloaded from www.Manualslib.com manuals search engine

STEP	INSPECTION		ACTION
3	Check if ignition timing at idle is OK ☞ **page *F–72** **Ignition timing (BTDC): 7 ± 1°** 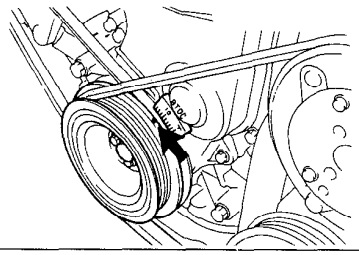	Yes	Check for correct idle speed ☞ **page *F–72** **Idle speed: 750 ± 50 rpm (with parking brake applied)** ⇨ If OK, go to next step ⇨ If not OK, adjust idle speed ☞ **page *F–72**
		No	Adjust ignition timing ☞ **page *F–72**
4	Check if selector lever operation is OK ☞ **page *K–264** 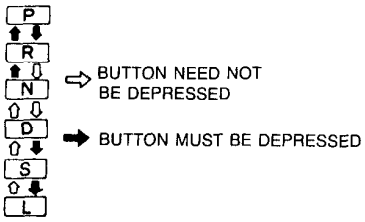 	Yes	Go to next step
		No	Adjust or repair selector lever ☞ **page *K–264**
5	Check if throttle cable operates smoothly and is installed correctly ☞ **page K2–137** 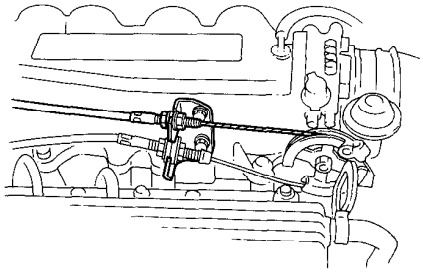	Yes	Go to next step
		No	Replace throttle cable ☞ **page K2–137**
6	Check if line pressure at idle is OK ☞ **page K2–123** **Line pressure:** Range: D,S,L — Line pressure kPa (kg/cm², psi): Idle 353—432 (3.6—4.4, 51—63); Stall 873—1,040 (8.9—10.6, 127—151) Range: R — Line pressure kPa (kg/cm², psi): Idle 598—942 (6.1—9.6, 87—137); Stall 1,668—2,011 (17.0—20.5, 242—292)	Yes	Go to next step
		No	Adjust throttle cable ☞ **page K2–137**
7	Check if engine stall speed is OK ☞ **page K2–119** **Engine stall speed: 2,550—2,650 rpm**	Yes	Go to next step
		No	Check for cause (Refer to Evaluation) ☞ **page K2–121**
8	Rebuild or replace transaxle		

* Refer to 1990 323 Workshop Manual (1195-10-89E).

03U0K2-031

Downloaded from www.Manualslib.com manuals search engine

6	NO SHIFT
DESCRIPTION	• Vehicle upshifts and downshifts in HOLD mode forward ranges only

[TROUBLESHOOTING HINTS]
① ATF level low
② Hold switch circuit shorted
③ Throttle sensor malfunction or misadjustment
④ Pulse generator malfunction
⑤ Shift solenoid valve stuck (1-2, 2-3, or 3-4)
⑥ Control valve stuck (Pressure regulator valve, 1-2 shift valve, 2-3 shift valve, 3-4 shift valve, or manual valve)
⑦ Oil pump worn
⑧ Hydraulic circuit clogged or leaking

STEP	INSPECTION		ACTION
1	Check if ATF level is OK ☞ **page K2–134** **Level:** **Between notches on HOT side of level gauge at 65°C (149°F)** 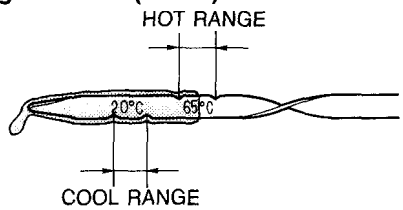 	Yes	Go to next step
		No	Add ATF to specified level ☞ **page K2–134**
2	Check if ATF condition is OK ☞ **page K2–134** ① Clear pink: Normal condition ② Dark or black (with friction material): Worn powertrain components ③ Milky pink: Water contamination ④ Light to dark brown (Oxidation): Overheated or old fluid 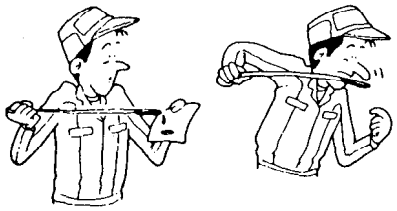	Yes	Go to next step
		No	No.2 condition Overhaul transaxle and repair or replace parts as necessary ☞ **page K2–134** No.3 or No.4 condition Replace ATF
3	Check if "00" is displayed on EC-AT Tester with ignition switch ON ☞ **page K2–106** 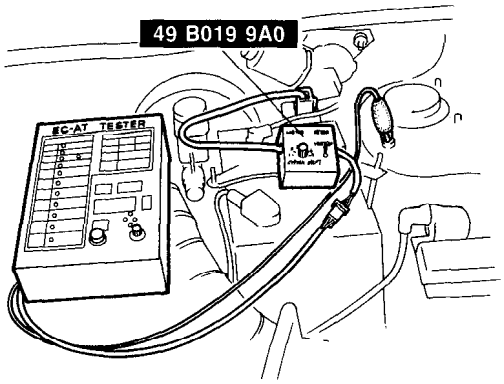 	Yes	Go to next step
		No	**Malfunction Code No. displayed** Check for cause (Refer to specified check sequence) ☞ **page K2–108** **No Code No. displayed** Check main relay and voltage of terminals 2Q and 2S of EC-AT control unit **Voltage:** **Approx. 12V (Ignition switch ON)**
			"88" flashes Check wiring between 1C terminal of EC-AT control unit and diagnosis connector ⇨ If OK, replace EC-AT control unit ⇨ If not OK, repair wiring

Downloaded from www.Manualslib.com manuals search engine

STEP	INSPECTION		ACTION
4	Connect EC-AT Tester to EC-AT control unit Check if all output and input component indications are correct (Especially hold switch, solenoid valves, throttle sensor voltage, and drum speed)	Yes	Go to Steps 6, 12, 14, 17, 20, 21 and 22 in sequence
		No	No indication at all lamps ⇨ Go to next step Individual lamp(s) does not illuminate ⇨ Check for cause
5	Check if voltage at 2Q and 2S terminals of EC-AT control unit is OK ☞ **page K2–144** **Voltage: Approx. 12V (Ignition switch ON)** 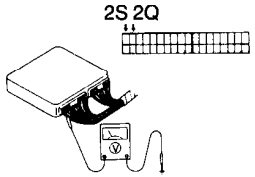	Yes	Go to next step
		No	Repair wiring
6	Disconnect solenoid valve connector and check if vehicle is driven as follows: **R range: Reverse** **D and S ranges: 3rd** **L range: 1st** **Note** **• Engine rpm at 40 km/h (25 mph)** **1st gear: 3,950 rpm** **3rd gear: 1,400 rpm**	Yes	Go to next step
		No	Overhaul transaxle and repair or replace any faulty parts ☞ **page K2–152**
7	Check if voltage at 2E, 2G, or 2I terminals of EC-AT control unit is OK ☞ **page K2–144** **Voltage:** **Approx. 12V (When solenoid valve ON)** 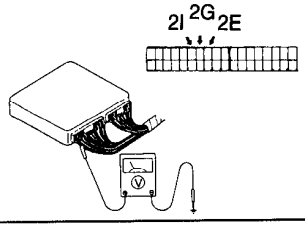	Yes	Go to Step 9
		No	Go to next step

Downloaded from www.Manualslib.com manuals search engine

STEP	INSPECTION		ACTION
8	Check if continuity of transistors of EC-AT control unit is OK Solenoid valve / Terminal / Continuity 1-2 shift / 2E and 1J or 2P / Yes 2-3 shift / 2G and 1J or 2P / Yes 3-4 shift / 2I and 1J or 2P / Yes	Yes	Go to next step
		No	Replace EC-AT control unit
9	Check if resistance between 2E, 2G, and 2I terminals of EC-AT control unit and ground is OK **Resistance: 13—27Ω** 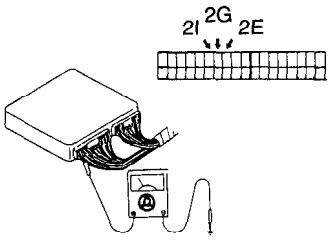 	Yes	Go to Step 11
		No	Go to next step
10	Check if resistance of solenoid valves is OK ☞ **page K2–147** **Resistance: 13—27Ω** 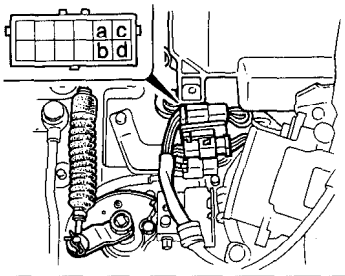 	Yes	Check for poor connection at connectors ⇨ If OK, go to next step ⇨ If not OK, repair wiring
		No	Replace solenoid valve
11	Disconnect 20-pin connector of EC-AT control unit Apply 12V to 2E, 2G, and 2I terminals and check if operation sound (clicking) of solenoid is heard	Yes	Try known good EC-AT control unit and go to next step
		No	Replace solenoid valve

Downloaded from www.Manualslib.com manuals search engine

STEP	INSPECTION		ACTION
12	Check if voltage at 2A and 2T terminals of EC-AT control unit is OK ☞ **page K2–144** Terminal: 2A — Voltage (V): 5 (Ignition switch ON) Terminal: 2T — Voltage (V): 0.4—4.4 (Accelerator closed to open) 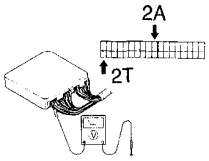 	Yes	Go to Step 14
		No	Check for poor connection at connectors ⇨ If OK, go to next step ⇨ If not OK, repair wiring
13	Check if throttle sensor is OK ☞ **page *F–143** 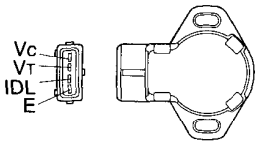 	Yes	Check for open or short circuit of wiring and poor connection at connectors ⇨ If OK, go to next step ⇨ If not OK, repair wiring
		No	Adjust or replace throttle sensor ☞ **page *F–143**
14	Disconnect 20-pin connector of EC-AT control unit Check if resistance between 2J terminal and 2L terminal of EC-AT control unit is OK **Resistance: 200—400Ω** 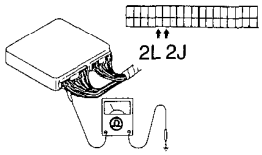 	Yes	Go to Step 16
		No	Go to next step
15	Check if resistance of pulse generator is OK ☞ **page K2–142** **Resistance: 200—400Ω** 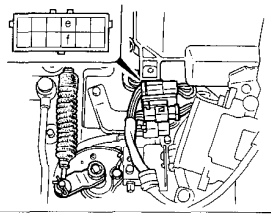	Yes	Check for poor connection at connectors and go to next step
		No	Replace pulse generator
16	Connect oscilloscope ground terminal to 2L terminal of EC-AT control unit, and oscilloscope input terminal to 2J terminal of EC-AT control unit Check if pulse display is OK 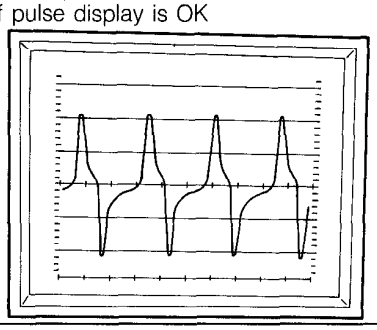	Yes	Check for open or short circuit of wiring and poor connection at connectors ⇨ If OK, go to next step ⇨ If not OK, repair wiring
		No	Very low voltage: Replace pulse generator
			Noise in wave form: Check for improper grounding of shield-wiring or replace pulse generator

* Refer to 1990 323 Workshop Manual (1195-10-89E).

Downloaded from www.Manualslib.com manuals search engine

STEP	INSPECTION		ACTION
17	Check if voltage at 1H terminal of EC-AT control unit is OK ☞ **page K2–144** **Voltage: Approx. 12V (Hold switch released)** 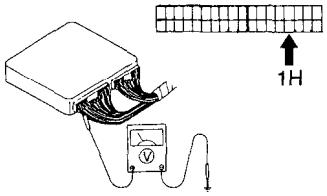 	Yes	Go to Step 19
		No	Go to next step
18	Check if continuity between a terminal of hold switch and 1H terminal of EC-AT control unit is OK	Yes	Go to next step
		No	Repair wiring
19	Check if operation of hold switch is OK ☞ **page K2–140** Switch: Depressed — Continuity: No Switch: Released — Continuity: Yes 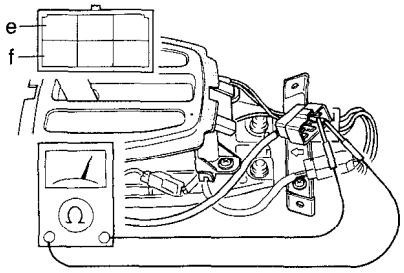 	Yes	Check for open or short circuit of wiring and poor connection at connectors ⇨ If OK, go to next step ⇨ If not OK, repair wiring
		No	Replace selector lever knob assembly
20	Disconnect connectors from EC-AT control unit Apply 12V to solenoid valve terminals shown and check if vehicle drives in conditions below in D range 12V to terminal: 2G and 2I — Vehicle condition: 1st 12V to terminal: 2E, 2G, and 2I — Vehicle condition: 2nd 12V to terminal: — — Vehicle condition: 3rd 12V to terminal: 2E and 2I — Vehicle condition: OD ☞ **page K2–144**	Yes	Try known-good EC-AT control unit and go to next step
		No	Overhaul transaxle and check for cause ☞ **page K2–152**

Downloaded from www.Manualslib.com manuals search engine

STEP	INSPECTION		ACTION
21	Check if engine stall speed is OK ☞ **page K2–119** **Engine stall speed: 2,550—2,650 rpm** 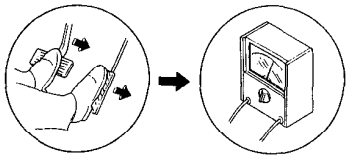	Yes	Go to next step
		No	Check for cause (Refer to Evaluation) ☞ **page K2–121**
22	Check if line pressure and throttle pressure are within specification ☞ **page K2–123 125** **Line pressure:** Range: D,S,L — Line pressure kPa (kg/cm², psi): Idle 353—432 (3.6—4.4, 51—63); Stall 873—1,040 (8.9—10.6, 127—151) Range: R — Line pressure kPa (kg/cm², psi): Idle 598—942 (6.1—9.6, 87—137); Stall 1,668—2,011 (17.0—20.5, 242—292) **Throttle pressure:** Range: D — Throttle pressure kPa (kg/cm², psi): Idle 39—88 (0.4—0.9, 6—13); Stall 471—589 (4.8—6.0, 68—85)	Yes	Go to next step
		No	Check for cause (Refer to evaluation) ☞ **page K2–124 126**
23	Try known good EC-AT control unit, control valve assembly, or replace transaxle		

03U0K2-032

Downloaded from www.Manualslib.com manuals search engine

7	ABNORMAL SHIFT
DESCRIPTION	• Abnormal shifting (ex. 1st → 3rd, 1st → OD)

[TROUBLESHOOTING HINTS]

① ATF level low
② Throttle sensor malfunction or misadjusted
③ Pulse generator malfunction
④ Hold switch circuit shorted
⑤ 2-4 brake band misadjusted
⑥ Shift solenoid valves stuck (1-2, 2-3, or 3-4)
⑦ Control valve stuck (Pressure regulator valve, 1-2 shift valve, 2-3 shift valve, or 3-4 shift valve)
⑧ Hydraulic circuit clogged or leaking

STEP	INSPECTION		ACTION
1	Check if ATF level is OK ☞ **page K2–134** **Level:** **Between notches on HOT side of level gauge at 65°C (149°F)** 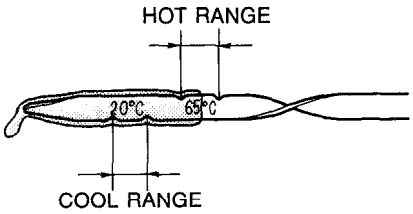	Yes	Go to next step
		No	Add ATF to specified level ☞ **page K2–134**
2	Check if ATF condition is OK ☞ **page K2–134** ① Clear pink: Normal condition ② Dark or black (with friction material): Worn powertrain components ③ Milky pink: Water contamination ④ Light to dark brown (Oxidation): Overheated or old fluid 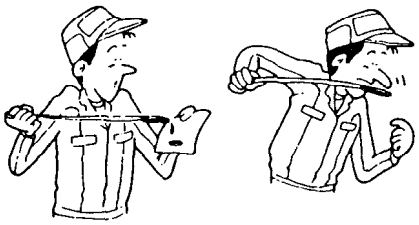	Yes	Go to next step
		No	No.2 condition Overhaul transaxle and repair or replace parts as necessary ☞ **page K2–134** No.3 or No.4 condition Replace ATF

Downloaded from www.Manualslib.com manuals search engine

STEP	INSPECTION		ACTION
3	Check if '00' is displayed on EC-AT Tester with ignition switch ON ☞ **page K2–106** 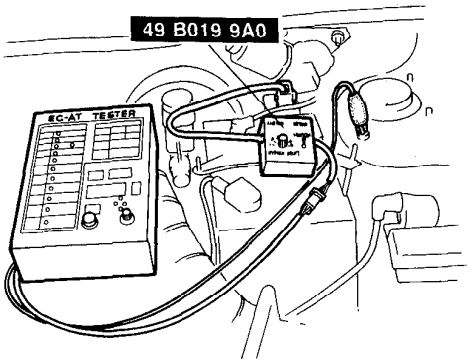 	Yes	Go to next step
		No	**Malfunction Code No. displayed** Check for cause (Refer to specified check sequence) ☞ **page K2–108** **No Code No. displayed** Check main relay and voltage of terminals 2Q and 2S of EC-AT control unit **Voltage:** **Approx. 12V (Ignition switch ON)** **"88" flashes** Check wiring between 1C terminal of EC-AT control unit and diagnosis connector ⇨ If OK, replace EC-AT control unit ⇨ If not OK, repair wiring
4	Connect EC-AT Tester to EC-AT control unit Check if all output and input component indications are correct (Especially hold switch, solenoid valves, throttle sensor voltage, and drum speed)	Yes	Go to Steps 6, 11, 13, 16, 19, 20 and 21 in sequence
		No	No indication at all lamps ⇨ Go to next step Individual lamp(s) does not illuminate ⇨ Check for cause
5	Check if voltage at 2Q and 2S terminals of EC-AT control unit is OK ☞ **page K2–144** **Voltage: Approx. 12V (Ignition switch ON)** 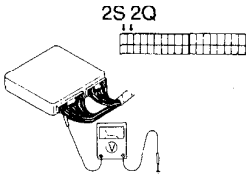 	Yes	Go to next step
		No	Repair wiring
6	Disconnect solenoid valve connector and check if vehicle is driven as follows: **R range: Reverse** **D and S ranges: 3rd** **L range: 1st** **Note** **• Engine rpm at 40 km/h (25 mph)** **1st gear: 3,950 rpm** **3rd gear: 1,400 rpm**	Yes	Go to next step
		No	Overhaul transaxle and repair or replace any faulty parts ☞ **page K2–152**

Downloaded from www.Manualslib.com manuals search engine

STEP	INSPECTION		ACTION
7	Check if continuity of transistors of EC-AT control unit is OK Solenoid valve / Terminal / Continuity 1-2 shift / 2E and 1J or 2P / Yes 2-3 shift / 2G and 1J or 2P / Yes 3-4 shift / 2I and 1J or 2P / Yes	Yes	Go to next step
		No	Replace EC-AT control unit
8	Check if resistance between 2E, 2G, or 2I terminals of EC-At control unit and ground is OK **Resistance: 13—27Ω** 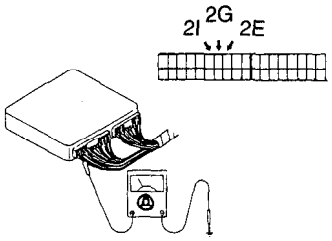 	Yes	Go to Step 10
		No	Go to next step
9	Check if resistance of solenoid valve is OK ☞ **page K2–143** **Resistance: 13—27Ω** 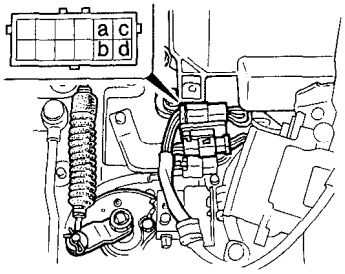 	Yes	Check for poor connection at connectors ⇨ If OK, go to next step ⇨ If not OK, repair wiring
		No	Replace solenoid valve
10	Disconnect 20-pin connector of EC-AT control unit Apply 12V to 2E, 2G, and 2I terminals and check if operation sound (clicking) of solenoid is heard	Yes	Try known good EC-AT control unit and go to next step
		No	Replace solenoid valve

Downloaded from www.Manualslib.com manuals search engine

STEP	INSPECTION		ACTION
11	Check if voltage at 2A and 2T terminals of EC-AT control unit is OK ☞ **page K2–144** Terminal: 2A — Voltage (V): 5 (Ignition switch ON) Terminal: 2T — Voltage (V): 0.4—4.4 (Accelerator closed to open) 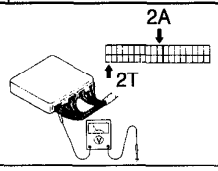	Yes	Go to Step 13
		No	Check for poor connection at connectors ⇨ If OK, go to next step ⇨ If not OK, repair wiring
12	Check if throttle sensor is OK ☞ **page *F–143** 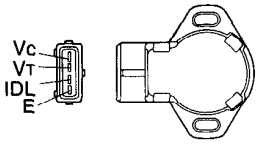	Yes	Check for open or short circuit of wiring and poor connection at connectors ⇨ If OK, go to next step ⇨ If not OK, repair wiring
		No	Replace throttle sensor
13	Disconnect 20-pin connector of EC-AT control unit Check if resistance between 2J terminal and 2L terminal of EC-AT control unit is OK **Resistance: 200—400Ω** 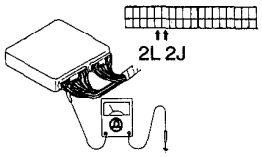	Yes	Go to Step 15
		No	Go to next step
14	Check if resistance of pulse generator is OK ☞ **page K2–142** **Resistance: 200—400Ω** 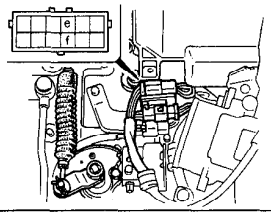	Yes	Check for poor connection at connectors and go to next step
		No	Replace pulse generator
15	Connect oscilloscope ground terminal to 2L terminal of EC-AT control unit, and oscilloscope input terminal to 2J terminal of EC-AT control unit Check if pulse display is OK 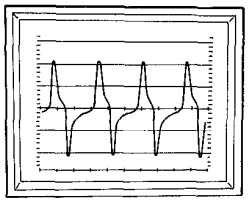	Yes	Go to next step
		No	Very low voltage: Replace pulse generator
			Noise in wave form: Check for improper grounding of shield-wiring or replace pulse generator

* Refer to 1990 323 Workshop Manual (1195-10-89E).

Downloaded from www.Manualslib.com manuals search engine

STEP	INSPECTION		ACTION
16	Check if voltage at 1H terminal of EC-AT control unit is OK ☞ **page K2–144** **Voltage: Approx. 12V (Hold switch released)** 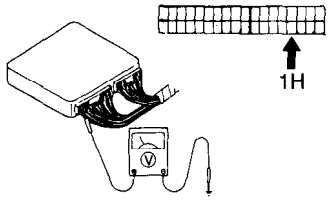 	Yes	Go to Step 18
		No	Go to next step
17	Check if continuity between terminal a of hold switch and 1H terminal of EC-AT control unit is OK	Yes	Go to next step
		No	Repair wiring
18	Check if operation of hold switch is OK ☞ **page K2–140** Switch: Depressed — Continuity: No Switch: Released — Continuity: Yes 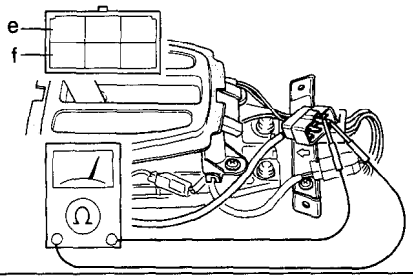 	Yes	Check for open or short circuit of wiring and poor connection at connectors ⇨ If OK, go to next step ⇨ If not OK, repair wiring
		No	Replace selector lever knob assembly
19	Check if servo piston stroke is OK ☞ **page K2–198** 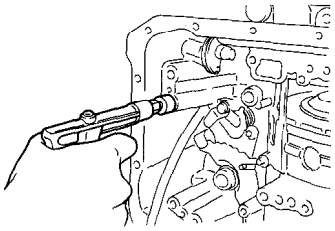	Yes	Go to next step
		No	Adjust ☞ **page K2–198**

Downloaded from www.Manualslib.com manuals search engine

<table>
<tr><th>STEP</th><th>INSPECTION</th><th></th><th>ACTION</th></tr>
<tr><td rowspan="2">20</td><td>Check if engine stall speed is OK
☞ page K2–119

Engine stall speed: 2,550—2,650 rpm

 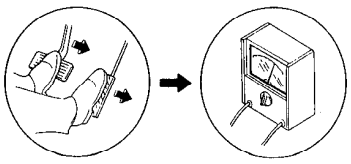 </td><td>Yes</td><td>Go to next step</td></tr>
<tr><td>No</td><td>Check for cause (Refer to Evaluation) ☞ page K2–121</td></tr>
<tr><td rowspan="2">21</td><td rowspan="2">Check if line pressure and throttle pressure are within specification
☞ page K2–123
125

Line pressure:
<table>
<tr><th rowspan="2">Range</th><th colspan="2">Line pressure kPa (kg/cm², psi)</th></tr>
<tr><th>Idle</th><th>Stall</th></tr>
<tr><td>D,S,L</td><td>353—432
(3.6—4.4, 51—63)</td><td>873—1,040
(8.9—10.6, 127—151)</td></tr>
<tr><td>R</td><td>598—942
(6.1—9.6, 87—137)</td><td>1,668—2,011
(17.0—20.5, 242—292)</td></tr>
</table>
Throttle pressure:
<table>
<tr><th rowspan="2">Range</th><th colspan="2">Throttle pressure kPa (kg/cm², psi)</th></tr>
<tr><th>Idle</th><th>Stall</th></tr>
<tr><td>D</td><td>39—88
(0.4—0.9, 6—13)</td><td>471—589
(4.8—6.0, 68—85)</td></tr>
</table></td><td>Yes</td><td>Go to next step</td></tr>
<tr><td>No</td><td>Check for cause (Refer to Evaluation) ☞ page K2–124
126</td></tr>
<tr><td>22</td><td colspan="3">Try known good EC-AT control unit, control valve assembly, or replace transaxle</td></tr>
</table>

03U0K2-033

Downloaded from www.Manualslib.com manuals search engine

8	FREQUENT SHIFTING
DESCRIPTION	• Downshift occurs when accelerator depressed slightly in D, S, and L ranges, Normal mode

[TROUBLESHOOTING HINTS]
① Throttle sensor malfunction or misadjusted
② Control valve stuck
③ Hydraulic circuit clogged or leaking

STEP	INSPECTION		ACTION
1	Check if '00' is displayed on EC-AT Tester with ignition switch ON ☞ **page K2–106** 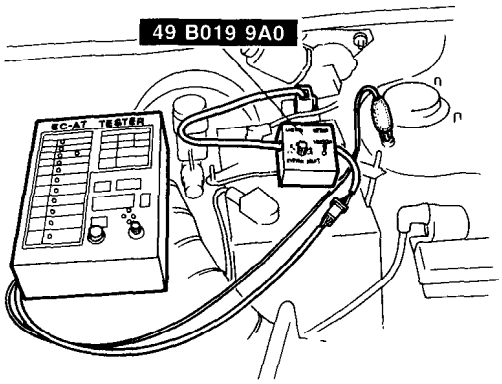 	Yes	Go to next step
		No	**Malfunction Code No. displayed** Check for cause (Refer to specified check sequence) ☞ **page K2–108** **No Code No. displayed** Check main relay and voltage of terminals 2Q and 2S of EC-AT control unit **Voltage:** **Approx. 12V (Ignition switch ON)**
			"88" flashes Check wiring between 1C terminal of EC-AT control unit and diagnosis connector ⇨ If OK, replace EC-AT control unit ⇨ If not OK, repair wiring
2	Connect EC-AT Tester to EC-AT control unit Check if all output and input component indications are correct (Especially throttle sensor voltage)	Yes	Go to Steps 4, 6, and 7
		No	No indication at all lamps ⇨ Go to next step Individual lamp(s) does not illuminate ⇨ Check for cause
3	Check if voltage at 2Q and 2S terminals of EC-AT control unit is OK ☞ **page K2–144** **Voltage: Approx. 12V (Ignition switch ON)** 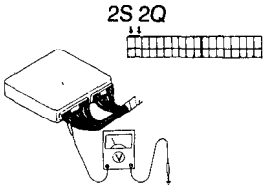 	Yes	Go to next step
		No	Repair wiring

Downloaded from www.Manualslib.com manuals search engine

STEP	INSPECTION		ACTION
4	Check if voltage at 2A and 2T terminals of EC-AT control unit is OK ☞ **page K2–144** Terminal: 2A — Voltage (V): 5 (Ignition switch ON) Terminal: 2T — Voltage (V): 0.4—4.4 (Accelerator closed to open) 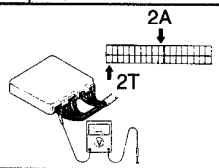	Yes	Go to Step 6
		No	Check for poor connection at connectors ⇨ If OK, go to next step ⇨ If not OK, repair or replace
5	Check if throttle sensor is OK ☞ **page *F–143** 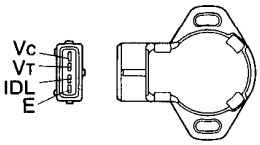	Yes	Check for open or short circuit of wiring and poor connection at connectors ⇨ If OK, go to next step ⇨ If not OK, repair or replace
		No	Adjust or replace throttle sensor ☞ **page *F–143**
6	Check if engine stall speed is OK ☞ **page K2–119** **Engine stall speed: 2,550—2,650 rpm** 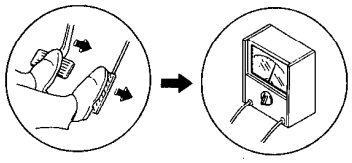	Yes	Go to next step
		No	Check for cause (Refer to Evaluation) ☞ **page K2–121**
7	Check if line pressure and throttle pressure are within specification ☞ **page K2–123 125** **Line pressure:** Range: D,S,L — Line pressure kPa (kg/cm², psi): Idle 353—432 (3.6—4.4, 51—63); Stall 873—1,040 (8.9—10.6, 127—151) Range: R — Line pressure kPa (kg/cm², psi): Idle 598—942 (6.1—9.6, 87—137); Stall 1,668—2,011 (17.0—20.5, 242—292) **Throttle pressure:** Range: D — Throttle pressure kPa (kg/cm², psi): Idle 39—88 (0.4—0.9, 6—13); Stall 471—589 (4.8—6.0, 68—85)	Yes	Go to next step
		No	Check for cause (Refer to Evaluation) ☞ **page K2–124 126**
8	Try known good EC-AT control unit, control valve assembly, or replace		

* Refer to 1990 323 Workshop Manual (1195-10-89E).

03U0K2-034

Downloaded from www.Manualslib.com manuals search engine

9	SHIFT POINT HIGH OR LOW
DESCRIPTION	• Shift points do not match shift diagram (Refer to road test in this section)

[TROUBLESHOOTING HINTS]

① ATF level low
② Throttle sensor malfunction or misadjusted
③ Idle switch worn
④ Pulse generator malfunction
⑤ Vehicle speed sensor malfunction
⑥ Control valve stuck (1-2 shift valve, 2-3 shift valve, or 3-4 shift valve)

STEP	INSPECTION		ACTION
1	Check if ATF level is OK ☞ **page K2–134** **Level:** **Between notches on HOT side of level gauge at 65°C (149°F)** 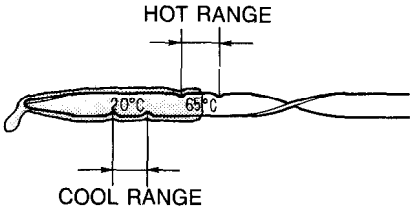 	Yes	Go to next step
		No	Add ATF to specified level ☞ **page K2–134**
2	Check if ATF condition is OK ☞ **page K2–134** ① Clear pink: Normal condition ② Dark or black (with friction material): Worn powertrain components ③ Milky pink: Water contamination ④ Light to dark brown (Oxidation): Overheated or old fluid 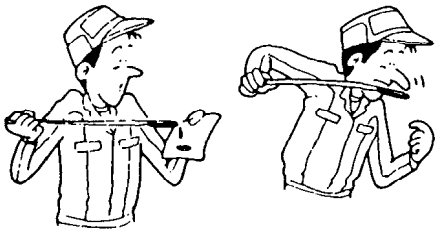	Yes	Go to next step
		No	No.2 condition Overhaul transaxle and repair or replace parts as necessary ☞ **page K2–134** No.3 or No.4 condition Replace ATF
3	Check if '00' is displayed on EC-AT tester with ignition switch ON ☞ **page K2–106** 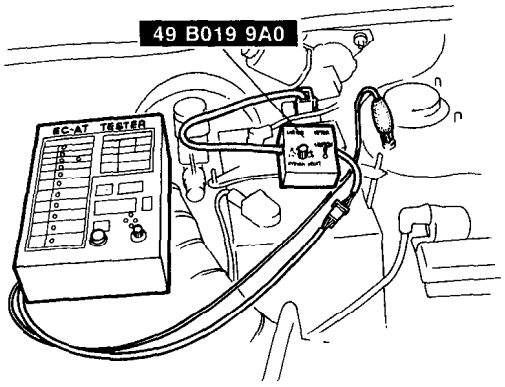 	Yes	Go to next step
		No	**Malfunction Code No. displayed** Check for cause (Refer to specified check sequence) ☞ **page K2–108** **No Code No. displayed** Check main relay and voltage of terminals 2Q and 2S of EC-AT control unit **Voltage:** **Approx. 12V (Ignition switch ON)** **"88" flashes** Check wiring between 1C terminal of EC-AT control unit and diagnosis connector ⇨ If OK, replace EC-AT control unit ⇨ If not OK, repair wiring

Downloaded from www.Manualslib.com manuals search engine

STEP	INSPECTION		ACTION
4	Connect EC-AT Tester to EC-AT control unit Check if all output and input component indications are correct (Especially idle switch, throttle sensor voltage, vehicle speed and drum speed)	Yes	Go to Steps 6, 8, 10, 13, 14 and 15 in sequence
		No	No indication at all lamps ⇨ Go to Step Individual lamp(s) does not illuminate ⇨ Check for cause
5	Check if voltage at 2Q and 2S terminals of EC-AT control unit is OK ☞ **page K2–144** **Voltage: Approx. 12V (Ignition switch ON)** 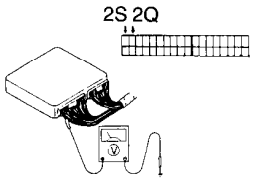 	Yes	Go to next step
		No	Repair wiring
6	Check if voltage at 1O terminal of EC-AT control unit is OK ☞ **page K2–144** **Voltage: Approx. 12V (Throttle valve open)** 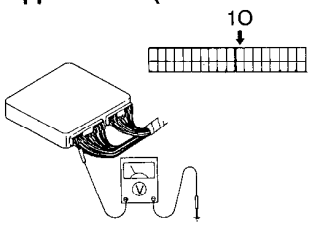 	Yes	Go to Step 8
		No	Go to next step
7	Check for continuity between 1O terminal of EC-AT control unit and idle switch terminal	Yes	Go to next step
		No	Repair wiring
8	Check if voltage at 2A and 2T terminals of EC-AT control unit is OK ☞ **page K2–144** Terminal: 2A — Voltage (V): 5 (Ignition switch ON) Terminal: 2T — Voltage (V): 0.4—4.4 (Accelerator closed to open) 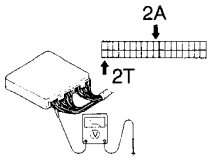 	Yes	Go to Step 10
		No	Check for poor connection at connectors ⇨ If OK, go to next step ⇨ If not OK, repair or replace

Downloaded from www.Manualslib.com manuals search engine

STEP	INSPECTION		ACTION
9	Check if throttle sensor is OK ☞ **page *F–143** 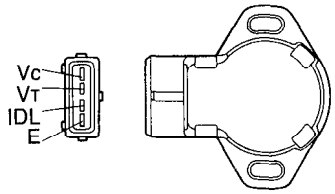	Yes	Check for open or short circuit of wiring and poor connection at connectors ⇨ If OK, go to next step ⇨ If not OK, repair or replace
		No	Adjust or replace throttle sensor ☞ **page *F–143**
10	Disconnect 20-pin connector of EC-AT control unit Check if resistance between 2J terminal and 2L terminals of EC-AT control unit is OK **Resistance: 200—400Ω** 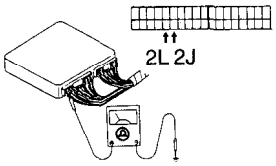	Yes	Go to Step 12
		No	Go to next step
11	Check if resistance of pulse generator is OK ☞ **page K2–142** **Resistance: 200—400Ω** 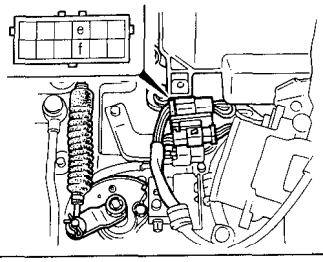	Yes	Check for poor connection at connectors and go to next step
		No	Replace pulse generator
12	Connect oscilloscope ground terminal to 2L terminal of EC-AT control unit, and oscilloscope input terminal to 2J terminal of EC-AT control unit Check if pulse display is OK 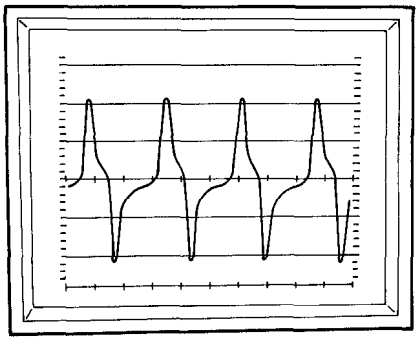	Yes	Go to next step
		No	Very low voltage: Replace pulse generator
			Noise in wave from: Check for improper grounding of shield-wiring or replace pulse generator

* Refer to 1990 323 Workshop Manual (1195-10-89E).

Downloaded from www.Manualslib.com manuals search engine

<table>
<tr><th>STEP</th><th>INSPECTION</th><th></th><th>ACTION</th></tr>
<tr><td>13</td><td>Disconnect connectors from EC-AT control unit
Apply 12V to solenoid valve terminals shown and check if vehicle drives in conditions below in D range
<table><tr><th>12V to terminal</th><th>Vehicle condition</th></tr><tr><td>2G and 2I</td><td>1st</td></tr><tr><td>2E, 2G, and 2I</td><td>2nd</td></tr><tr><td>—</td><td>3rd</td></tr><tr><td>2E and 2I</td><td>OD</td></tr></table>☞ page K2–138</td><td>Yes</td><td>Try known-good EC-AT control unit and go to next step</td></tr>
<tr><td></td><td></td><td>No</td><td>Overhaul transaxle and check for cause ☞ page K2–152</td></tr>
<tr><td>14</td><td>Check if engine stall speed is OK
☞ page K2–119
Engine stall speed: 2,550—2,650 rpm
 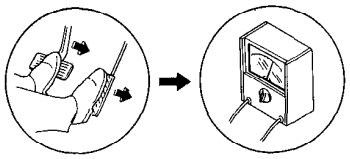 </td><td>Yes</td><td>Go to next step</td></tr>
<tr><td></td><td></td><td>No</td><td>Check for cause (Refer to Evaluation) ☞ page K2–119</td></tr>
<tr><td>15</td><td>Check if line pressure and throttle pressure are within specification
☞ page K2–123 125
Line pressure:
<table><tr><th rowspan="2">Range</th><th colspan="2">Line pressure kPa (kg/cm², psi)</th></tr><tr><th>Idle</th><th>Stall</th></tr><tr><td>D,S,L</td><td>353—432
(3.6—4.4, 51—63)</td><td>873—1,040
(8.9—10.6, 127—151)</td></tr><tr><td>R</td><td>598—942
(6.1—9.6, 87—137)</td><td>1,668—2,011
(17.0—20.5, 242—292)</td></tr></table>
Throttle pressure:
<table><tr><th rowspan="2">Range</th><th colspan="2">Throttle pressure kPa (kg/cm², psi)</th></tr><tr><th>Idle</th><th>Stall</th></tr><tr><td>D</td><td>39—88
(0.4—0.9, 6—13)</td><td>471—589
(4.8—6.0, 68—85)</td></tr></table></td><td>Yes</td><td>Go to next step</td></tr>
<tr><td></td><td></td><td>No</td><td>Check for cause (Refer to Evaluation) ☞ page K2–124 126</td></tr>
<tr><td>16</td><td colspan="3">Try known good EC-AT control unit, control valve assembly, or replace transaxle</td></tr>
</table>

03U0K2-035

Downloaded from www.Manualslib.com manuals search engine

10	NO LOCKUP
DESCRIPTION	• No lockup in D range OD

[TROUBLESHOOTING HINTS]
① Stoplight switch or circuit shorted
② Solenoid valve stuck (1-2, 2-3, 3-4, or lockup)
③ Water thermo signal malfunction
④ Throttle sensor malfunction or misadjusted
⑤ Pulse generator malfunction
⑥ Hold switch circuit shorted
⑦ Control valve stuck (Lockup control valve)
⑧ Torque converter worn
⑨ Hydraulic circuit clogged or leaking

STEP	INSPECTION		ACTION
1	Check if "00" is displayed on EC-AT Tester with ignition switch ON ☞ **page K2–106** 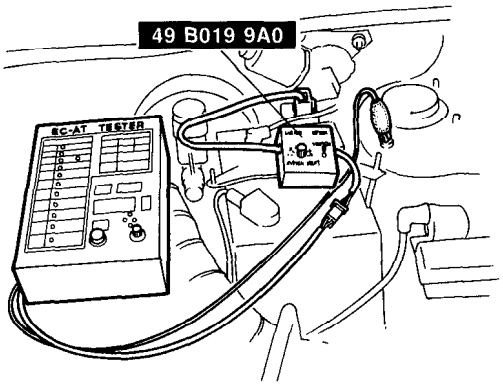	Yes	Go to next step
		No	**Malfunction Code No. displayed** Check for cause (Refer to specified check sequence) ☞ **page K2–108** **No Code No. displayed** Check main relay and voltage of terminals 2Q and 2S of EC-AT control unit **Voltage:** **Approx. 12V (Ignition switch ON)** **"88" flashes** Check wiring between 1C terminal of EC-AT control unit and diagnosis connector ⇨ If OK, replace EC-AT control unit ⇨ If not OK, repair wiring
2	Turn ignition switch ON Check if malfunction indicator lamp (MIL) is illuminated	Yes	Go to Step 4
		No	Check for cause (Refer to troubleshooting guide) ☞ **page *F–12**
3	Start engine and let it at idle Check if malfunction indicator lamp (MIL) goes OFF	Yes	Go to next step
		No	Check for malfunction Code No. ☞ **page *F–12**

* Refer to 1990 323 Workshop Manual (1195-10-89E).

Downloaded from www.Manualslib.com manuals search engine

STEP	INSPECTION		ACTION
4	Connect EC-AT Tester to EC-AT control unit Check if all output and input component indications are correct (Especially hold switch, water thermo signal, solenoid valves, throttle sensor voltage, and drum speed)	Yes	Go to Steps 6, 12, 16, 19, 22, 24, 27 and 28 in sequence
		No	No indication at all lamps ⇨ Go to next step Individual lamp(s) does not illuminate ⇨ Check for cause
5	Check if voltage at 2Q and 2S terminals of EC-AT control unit is OK ☞ **page K2–144** **Voltage: Approx. 12V (Ignition switch ON)** 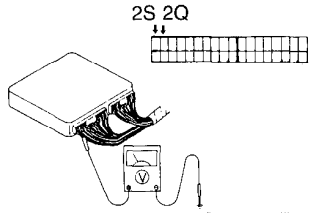 	Yes	Go to next step
		No	Repair wiring
6	Drive vehicle above 80 km/h (50 mph) in D range OD Check if voltage at terminal 2K of EC-AT control unit is OK ☞ **page K2–144** **Voltage: Approx. 12V (Lockup solenoid ON [Lockup])** 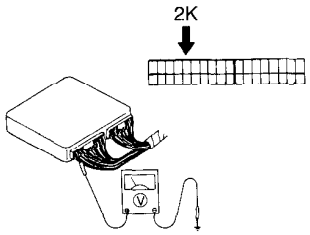 	Yes	Go to Step 8
		No	Go to next step
7	Check if continuity of transistor in EC-AT control unit is OK Solenoid valve / Terminal / Continuity 1-2 shift / 2E and 1J or 2P / Yes 2-3 shift / 2G and 1J or 2P / Yes 3-4 shift / 2I and 1J or 2P / Yes Lockup / 2K and 1J or 2P / Yes	Yes	Go to next step
		No	Replace EC-AT control unit

Downloaded from www.Manualslib.com manuals search engine

STEP	INSPECTION		ACTION
8	Check if resistance between 2E, 2G, 2I, or 2K terminals of EC-AT control unit and ground is OK **Resistance: 13—27Ω** 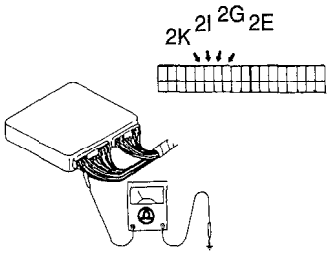 	Yes	Go to Step 10
		No	Go to next step
9	Check if resistance of solenoid valve(s) is OK ☞ **page K2–143** **Resistance: 13—27Ω** 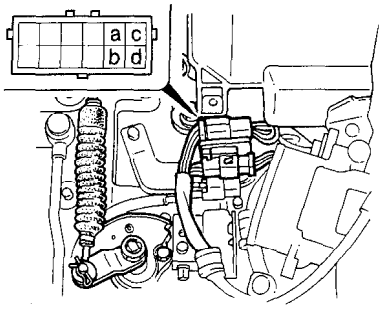 	Yes	Check for poor connection at connectors ⇨ If OK, go to next step ⇨ If not OK, repair wiring
		No	Replace solenoid valve
10	Disconnect 20-pin connector of EC-AT control unit Apply 12V to 2E, 2G, 2I and 2K terminals and check if operation sound (clicking) of solenoid is heard	Yes	Try known good EC-AT control unit and go to next step
		No	Replace solenoid valve
11	Apply 12V to 2K terminal of EC-AT control unit start engine in P range and let it ide Shift to D range and check if engine stalls	Yes	Go to next step
		No	Replace lockup solenoid valve

Downloaded from www.Manualslib.com manuals search engine

STEP	INSPECTION		ACTION
12	Check if voltage at 1N terminal of EC-AT control unit is OK ☞ **page K2–144** **Voltage: Approx. 12V After engine warmed up (Above (72°C [162°F])** 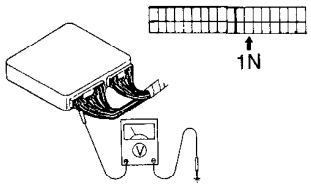 	Yes	Go to Step 16
		No	Go to next step
13	Check if voltage at 2Z terminal of engine control unit is OK **Voltage: Approx. 12V After engine warmed up (Above 72°C [162°F])** 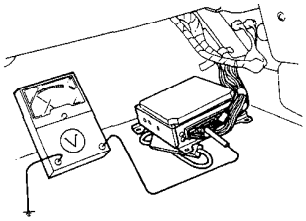	Yes	Check for continuity between terminal 1N of EC-AT control unit and terminal 2Z of engine control unit If OK, try known good EC-AT control unit and go to next step If not OK, repair wiring
		No	Go to next step
14	Check if voltage at terminal 2Q of engine control unit is OK **Approx. 2.5V:** **Engine coolant temp. 20°C (68°F)** **Below 0.5V: After engine warmed up** 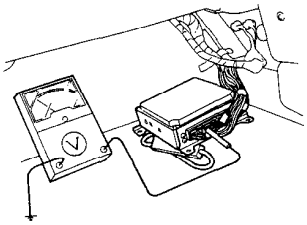	Yes	Replace engine control unit
		No	Go to next step
15	Check if operation of water thermosensor is OK ☞ **page *F–142** 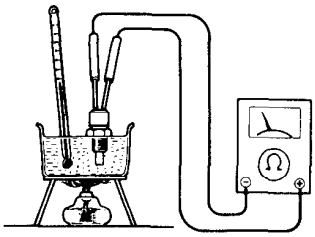	Yes	Check for open or short circuit of wiring and poor connection at connectors ⇨ If OK, go to next step ⇨ If not OK, repair wiring
		No	Replace water thermosensor ☞ **page *F–142**

* Refer to 1990 323 Workshop Manual (1195-10-89E).

Downloaded from www.Manualslib.com manuals search engine

STEP	INSPECTION		ACTION
16	Check if voltage at 1F terminal of EC-AT control is OK **Voltage:** **Approx. 12V (Brake pedal depressed)** 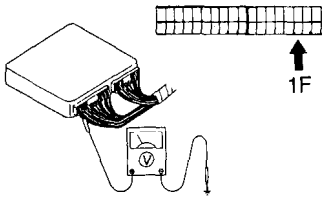 	Yes	Go to Step 19
		No	Go to next step
17	Check for continuity between terminal 1F of EC-AT control unit and stoplight switch	Yes	Go to next step
		No	Repair wiring
18	Check if operation of stoplight switch is OK ☞ **page *T–45** Switch / Continuity Depressed / Yes Released / No 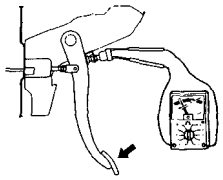	Yes	Check for short or open circuit of wiring and poor connection at connector ⇨ If OK, go to next step ⇨ If not OK, repair wiring
		No	Replace stoplight switch
19	Check if voltage at 1H terminal of EC-AT control unit is OK ☞ **page K2–144** **Voltage: Approx. 12V (Hold switch released)** 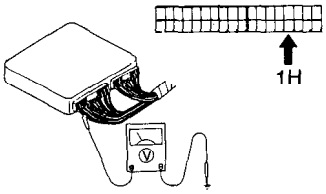 	Yes	Go to Step 22
		No	Go to next step
20	Check if continuity between a terminal of hold switch and 1H terminal of EC-AT control unit is OK	Yes	Go to next step
		No	Repair wiring

* Refer to 1990 323 Workshop Manual (1195-10-89E).

Downloaded from www.Manualslib.com manuals search engine

STEP	INSPECTION		ACTION
21	Check if operation of hold switch is OK ☞ **page K2–140** Switch: Depressed — Continuity: No Switch: Released — Continuity: Yes 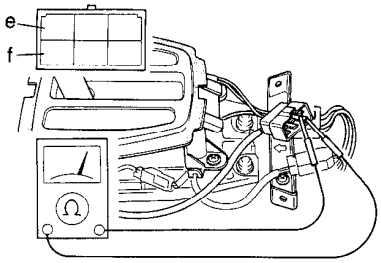 	Yes	Check for open or short circuit of wiring and poor connection at connectors ⇨ If OK, go to next step ⇨ If not OK, repair wiring
		No	Replace selector lever knob assembly
22	Check if voltage at 2A and 2T terminals of EC-AT control unit is OK ☞ **page K2–144** Terminal: 2A — Voltage (V): 5 (Ignition switch ON) Terminal: 2T — Voltage (V): 0.4—4.4 (Accelerator closed to open) 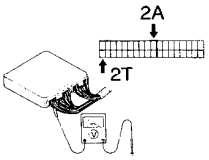 	Yes	Go to Step 24
		No	Check if poor connection at connectors ⇨ If OK, go to next step ⇨ If not OK, repair or replace
23	Check if throttle sensor is OK ☞ **page *F–143** 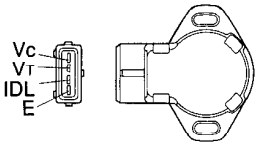 	Yes	Check for open or short circuit of wiring and poor connection at connectors ⇨ If OK, go to next step ⇨ If not OK, repair wiring
		No	Adjust or replace throttle sensor ☞ **page *F–143**
24	Disconnect 20-pin connector of EC-AT control unit Check if resistance between 2J and 2L terminals of EC-AT control unit is OK **Resistance: 200—400Ω**	Yes	Go to Step 26
		No	Go to next step

* Refer to 1990 323 Workshop Manual (1195-10-89E).

Downloaded from www.Manualslib.com manuals search engine

STEP	INSPECTION		ACTION
25	Check if resistance of pulse generator is OK ☞ **page K2–142** **Resistance: 200—400Ω** 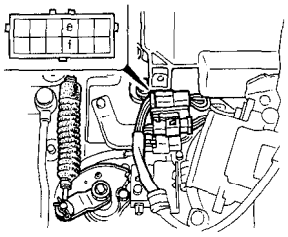	Yes	Check for poor connection at connectors and go to next step
		No	Replace pulse generator
26	Connect oscilloscope ground terminal to 2L terminal of EC-AT control unit, and oscilloscope input terminal to 2J terminal of EC-AT control unit Check if pulse display is OK 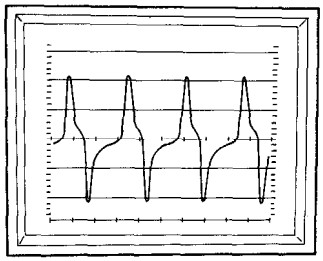	Yes	Go to next step
		No	Very low voltage: Replace pulse generator
			Noise in wave form: Check for improper grounding of shield-wiring or replace pulse generator
27	Check if engine stall speed is OK ☞ **page K2–119** **Engine stall speed: 2,550—2,650 rpm** 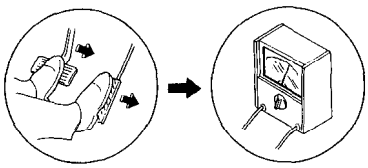	Yes	Go to next step
		No	Check for cause (Refer to Evaluation) ☞ **page K2–121**

Downloaded from www.Manualslib.com manuals search engine

STEP	INSPECTION		ACTION
28	Check if line pressure and throttle pressure are within specification ☞ **page K2–123 125** **Line pressure:** Range: D,S,L — Line pressure kPa (kg/cm², psi): Idle 353—432 (3.6—4.4, 51—63); Stall 873—1,040 (8.9—10.6, 127—151) Range: R — Line pressure kPa (kg/cm², psi): Idle 598—942 (6.1—9.6, 87—137); Stall 1,668—2,011 (17.0—20.5, 242—292) **Throttle pressure:** Range: D — Throttle pressure kPa (kg/cm², psi): Idle 39—88 (0.4—0.9, 6—13); Stall 471—589 (4.8—6.0, 68—85)	Yes	Go to next step
		No	Check for cause (Refer to Evaluation) ☞ **page K2–124 126**
29	Try known good EC-AT control unit, control valve assembly, or replace transaxle		

03U0K2-036

Downloaded from www.Manualslib.com manuals search engine

11	NO KICKDOWN
DESCRIPTION	• Does not downshift when accelerator depressed more than 7/8 within kickdown range

[TROUBLESHOOTING HINTS]
① Throttle sensor malfunction or misadjustment
② Pulse generator malfunction
③ Hold switch circuit shorted
④ Shift solenoid valves stuck (1-2, 2-3, or 3-4)

STEP	INSPECTION		ACTION
1	Check if "00" is displayed on EC-AT Tester with ignition switch ON ☞ **page K2–106** 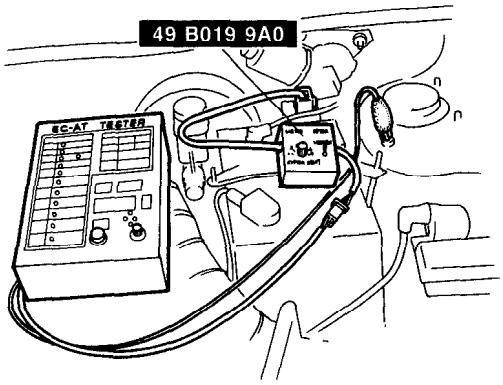	Yes	Go to next step
		No	**Malfunction Code No. displayed** Check for cause (Refer to specified check sequence) ☞ **page K2–108** **No Code No. displayed** Check main relay and voltage of terminals 2Q and 2S of EC-AT control unit **Voltage:** **Approx. 12V (Ignition switch ON)**
			"88" flashes Check wiring between 1C terminal of EC-AT control unit and diagnosis connector ⇨ If OK, replace EC-AT control unit ⇨ If not OK, repair wiring
2	Connect EC-AT Tester to EC-AT control unit Check if all output and input component indications are correct (Especially hold switch, solenoid valves, throttle sensor voltage and drum speed)	Yes	Go to Steps 4, 7, 9 and 12 in sequence
		No	No indication at all lamps ⇨ Go to next step Individual lamp(s) does not illuminate ⇨ Check for cause
3	Check if voltage at 2Q and 2S terminals of EC-AT control unit is OK ☞ **page K2–144** **Voltage: Approx. 12V (Ignition switch ON)** 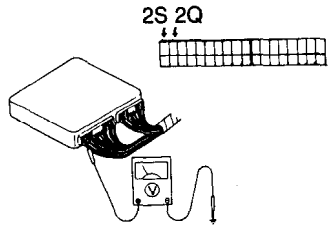	Yes	Go to next step
		No	Repair wiring

Downloaded from www.Manualslib.com manuals search engine

STEP	INSPECTION		ACTION
4	Check if voltage at 1H terminal of EC-AT control unit is OK ☞ **page K2–144** **Voltage: Approx. 12V (Hold switch released)** 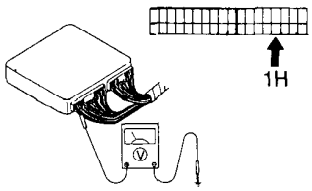 	Yes	Go to Step 7
		No	Go to next step
5	Check if continuity between a terminal of hold switch and 1H terminal of EC-AT control unit is OK	Yes	Go to next step
		No	Repair wiring
6	Check if operation of hold switch is OK ☞ **page K2–140** Switch: Depressed — Continuity: No Switch: Released — Continuity: Yes	Yes	Check for open or short circuit of wiring and poor connection at connectors ⇨ If OK, go to next step ⇨ If not OK, repair wiring
		No	Replace selector lever knob assembly
7	Check if voltage at 2A and 2T terminals of EC-AT control unit is OK ☞ **page K2–144** Terminal: 2A — Voltage (V): 5 (Ignition switch ON) Terminal: 2T — Voltage (V): 0.4—4.4 (Accelerator closed to open) 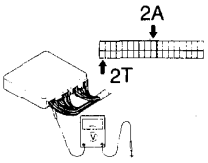 	Yes	Go to Step 9
		No	Check if poor connection at connectors ⇨ If OK, go to next step ⇨ If not OK, repair or replace
8	Check if throttle sensor is OK ☞ **page *F–143** 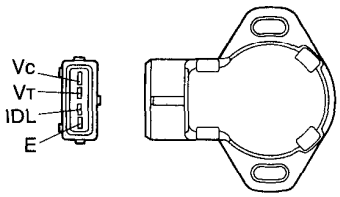 	Yes	Check for open or short circuit of wiring and poor connection at connectors ⇨ If OK, go to next step ⇨ If not OK, repair wiring
		No	Adjust or replace throttle sensor ☞ **page *F–143**

* Refer to 1990 323 Workshop Manual (1195-10-89E).

Downloaded from www.Manualslib.com manuals search engine

STEP	INSPECTION		ACTION
9	Disconnect 20-pin connector of EC-AT control unit Check if resistance between 2J terminal and 2L terminals of EC-AT control unit is OK **Resistance: 200—400Ω** 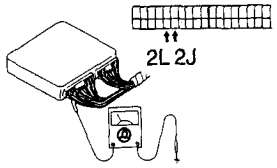 	Yes	Go to Step 11
		No	Go to next step
10	Check if resistance of pulse generator is OK ☞ **page K2–142** **Resistance: 200—400Ω** 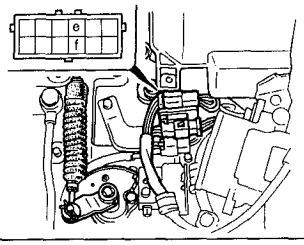	Yes	Check for poor connection at connectors and go to next step
		No	Replace pulse generator
11	Connect oscilloscope ground terminal to 2L terminal of EC-AT control unit, and oscilloscope input terminal to 2J terminal of EC-AT control unit Check if pulse display is OK 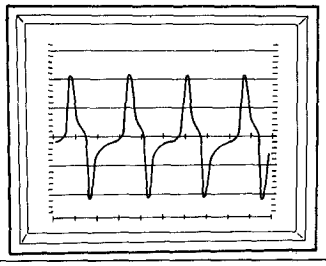	Yes	Go to next step
		No	Very low voltage: Replace pulse generator
			Noise in wave form: Check for improper grounding of shield-wiring or replace pulse generator
12	Disconnect solenoid valve connector and check if vehicle is driven as follows: **R range: Reverse** **D and S ranges: 3rd** **L range: 1st** **Note** **• Engine rpm at 40 km/h (25 mph)** **1st gear: 3,950 rpm** **3rd gear: 1,400 rpm**	Yes	Go to next step
		No	Overhaul transaxle and repair or replace any faulty parts ☞ **page K2–152**

Downloaded from www.Manualslib.com manuals search engine

STEP	INSPECTION		ACTION
13	Check if continuity of transistors in EC-AT control unit is OK Solenoid valve / Terminal / Continuity 1-2 shift / 2E and 1J or 2P / Yes 2-3 shift / 2G and 1J or 2P / Yes 3-4 shift / 2I and 1J or 2P / Yes	Yes	Go to next step
		No	Replace EC-AT control unit
14	Check if resistance between 2E, 2G, or 2I terminals of EC-AT control unit and ground is OK **Resistance: 13—27Ω** 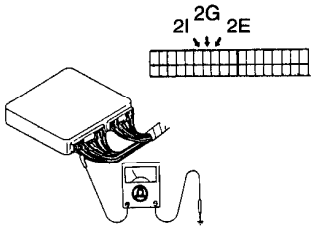	Yes	Go to Step 16
		No	Go to next step
15	Check if resistance of solenoid valve(s) is OK ☞ **page K2–143** **Resistance: 13—27Ω** 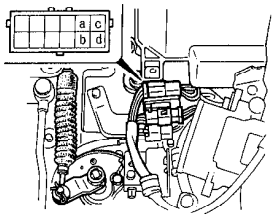	Yes	Check for poor connection at connectors ⇨ If OK, go to next step ⇨ If not OK, repair wiring
		No	Replace solenoid valve
16	Disconnect 20-pin connector of EC-AT control unit Apply 12V to 2E, 2G, and 2I terminals and check if operation sound (clicking) of solenoid is heard	Yes	Try known good EC-AT control unit and go to next step
		No	Replace solenoid valve
17	Try known good EC-AT control unit, control valve assembly, or replace transaxle		

03U0K2-037

Downloaded from www.Manualslib.com manuals search engine

12	ENGINE FLARES UP OR SLIPS WHEN ACCELERATING VEHICLE		

[TROUBLESHOOTING HINTS]
① ATF level low
② Powertrain slippage (Forward clutch, reverse clutch, low and reverse brake, one-way clutch 1, or one-way clutch 2)
③ Control valve stuck (Pressure regulator valve)
④ Oil pump worn

STEP	INSPECTION		ACTION
1	Check if ATF level is OK ☞ **page K2–134** **Level:** **Between notches on HOT side of level gauge at 65°C (149°F)** 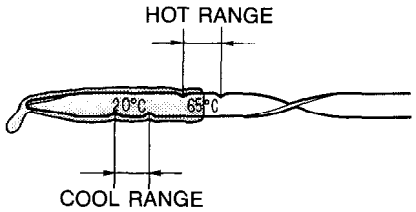 	Yes	Go to next step
		No	Add ATF to specified level ☞ **page K2–134**
2	Check if ATF condition is OK ☞ **page K2–134** ① Clear pink: Normal condition ② Dark or black (with friction material): Worn powertrain components ③ Milky pink: Water contamination ④ Light to dark brown (Oxidation): Overheated or old fluid 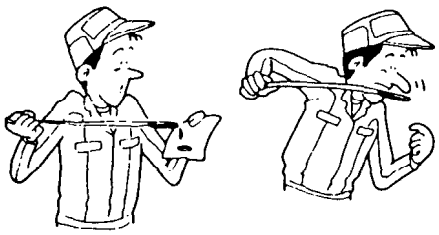	Yes	Go to next step
		No	No.2 condition Overhaul transaxle and repair or replace parts as necessary ☞ **page K2–134** No.3 or No.4 condition Replace ATF
3	Check if engine stall speed is OK ☞ **page K2–119** **Engine stall speed: 2,550—2,650 rpm** 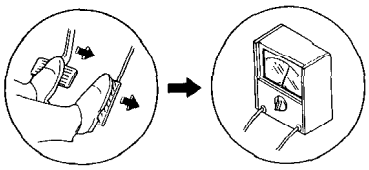	Yes	Go to next step
		No	Check for cause (Refer to Evaluation) ☞ **page K2–121**

Downloaded from www.Manualslib.com manuals search engine

<table>
<tr><th>STEP</th><th>INSPECTION</th><th></th><th>ACTION</th></tr>
<tr><td>4</td><td>Check if line pressure and throttle pressure are within specification
☞ page K2–123
125

Line pressure:
<table><tr><th rowspan="2">Range</th><th colspan="2">Line pressure kPa (kg/cm², psi)</th></tr><tr><th>Idle</th><th>Stall</th></tr><tr><td>D,S,L</td><td>353—432
(3.6—4.4, 51—63)</td><td>873—1,040
(8.9—10.6, 127—151)</td></tr><tr><td>R</td><td>598—942
(6.1—9.6, 87—137)</td><td>1,668—2,011
(17.0—20.5, 242—292)</td></tr></table>
Throttle pressure:
<table><tr><th rowspan="2">Range</th><th colspan="2">Throttle pressure kPa (kg/cm², psi)</th></tr><tr><th>Idle</th><th>Stall</th></tr><tr><td>D</td><td>39—88
(0.4—0.9, 6—13)</td><td>471—589
(4.8—6.0, 68—85)</td></tr></table></td><td>Yes</td><td>Go to next step</td></tr>
<tr><td></td><td></td><td>No</td><td>Check for cause (Refer to Evaluation) ☞ page K2–124
126</td></tr>
<tr><td>5</td><td colspan="3">Try known good EC-AT control unit, control valve assembly, or replace transaxle</td></tr>
</table>

03U0K2-038

Downloaded from www.Manualslib.com manuals search engine

13	ENGINE FLARES UP OR SLIPS WHEN UPSHIFTING OR DOWNSHIFTING

[TROUBLESHOOTING HINTS]
① ATF level low
② Throttle cable misadjusted
③ Powertrain slippage (Forward clutch, 3-4 clutch, 2-4 brake band, one-way clutch 1, one-way clutch 2, or reverse clutch)
④ Control valve stuck (Pressure regulator valve)
⑤ Oil pump worn
⑥ Hydraulic circuit clogged or leaking (Forward clutch, 3-4 clutch, 2-4 brake band, or reverse clutch)

STEP	INSPECTION		ACTION
1	Check if ATF level is OK ☞ **page K2–134** **Level:** **Between notches on HOT side of level gauge at 65°C (149°F)** 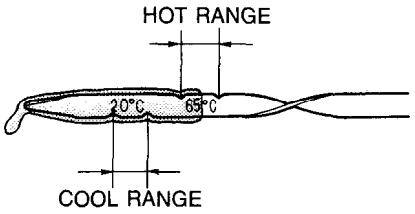 	Yes	Go to next step
		No	Add ATF to specified level ☞ **page K2–134**
2	Check if ATF condition is OK ☞ **page K2–134** ① Clear pink: Normal condition ② Dark or black (with friction material): Worn powertrain components ③ Milky pink: Water contamination ④ Light to dark brown (Oxidation): Overheated or old fluid 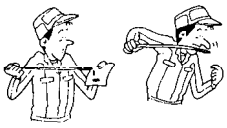	Yes	Go to next step
		No	No.2 condition Overhaul transaxle and repair or replace parts as necessary ☞ **page K2–134** No.3 or No.4 condition Replace ATF
3	Check if engine stall speed is OK ☞ **page K2–119** **Engine stall speed: 2,550—2,650 rpm** 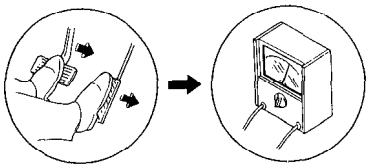	Yes	Go to next step
		No	Check for cause (Refer to Evaluation) ☞ **page K2–121**

Downloaded from www.Manualslib.com manuals search engine

<table>
<tr><th>STEP</th><th>INSPECTION</th><th></th><th>ACTION</th></tr>
<tr><td>4</td><td>Check if line pressure and throttle pressure are within specification
☞ page K2–123 125

Line pressure:
<table>
<tr><th rowspan="2">Range</th><th colspan="2">Line pressure kPa (kg/cm², psi)</th></tr>
<tr><th>Idle</th><th>Stall</th></tr>
<tr><td>D,S,L</td><td>353—432
(3.6—4.4, 51—63)</td><td>873—1,040
(8.9—10.6, 127—151)</td></tr>
<tr><td>R</td><td>598—942
(6.1—9.6, 87—137)</td><td>1,668—2,011
(17.0—20.5, 242—292)</td></tr>
</table>
Throttle pressure:
<table>
<tr><th rowspan="2">Range</th><th colspan="2">Throttle pressure kPa (kg/cm², psi)</th></tr>
<tr><th>Idle</th><th>Stall</th></tr>
<tr><td>D</td><td>39—88
(0.4—0.9, 6—13)</td><td>471—589
(4.8—6.0, 68—85)</td></tr>
</table></td><td>Yes</td><td>Go to next step</td></tr>
<tr><td></td><td></td><td>No</td><td>Check for cause (Refer to Evaluation) ☞ page K2–124 126</td></tr>
<tr><td>5</td><td colspan="3">Try known good EC-AT control unit or control valve assembly, or replace transaxle</td></tr>
</table>

03U0K2-039

Downloaded from www.Manualslib.com manuals search engine

14	EXCESSIVE N TO R OR N TO D RANGE SHIFT SHOCK

[TROUBLESHOOTING HINTS]
① Engine idle speed misadjusted
② Throttle cable misadjusted
③ Accumulator malfunction (N-D accumulator or N-R accumulator)
④ Hydraulic circuit clogged or leaking (N-D accumulator or N-R accumulator)
⑤ Control valve stuck (Pressure control valve, throttle valve, or throttle modulator valve)

STEP	INSPECTION		ACTION
1	Check if ATF level is OK ☞ **page K2–134** **Level:** **Between notches on HOT side of level gauge at 65°C (149°F)** 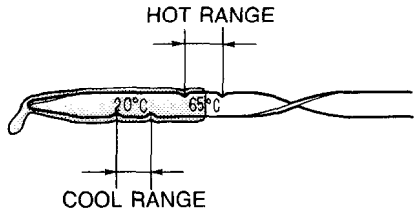 	Yes	Go to next step
		No	Add ATF to specified level ☞ **page K2–134**
2	Check if ATF condition is OK ☞ **page K2–134** ① Clear pink: Normal condition ② Dark or black (with friction material): Worn powertrain components ③ Milky pink: Water contamination ④ Light to dark brown (Oxidation): Overheated or old fluid 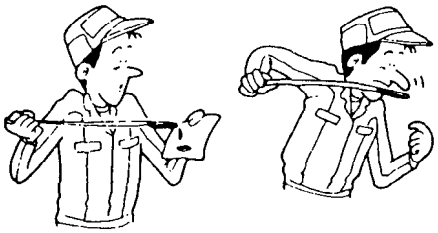	Yes	Go to next step
		No	No.2 condition Overhaul transaxle and repair or replace parts as necessary ☞ **page K2–134** No.3 or No.4 condition Replace ATF
3	Check if ignition timing at idle is OK ☞ **page *F–72** **Ignition timing (BTDC): 7 ± 1°** 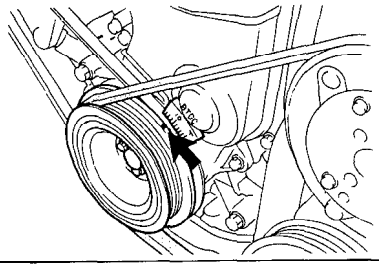	Yes	Check for correct idle speed ☞ **page *F–72** **Idle speed: 750 ± 50 rpm (with parking brake applied)** ⇨ If OK, go to next step ⇨ If not OK, adjust the idle speed ☞ **page *F–72**
		No	Adjust ignition timing ☞ **page *F–72**

* Refer to 1990 323 Workshop Manual (1195-10-89E).

Downloaded from www.Manualslib.com manuals search engine

STEP	INSPECTION		ACTION
4	Check if throttle cable operates smoothly and is installed correctly ☞ **page K2–137** 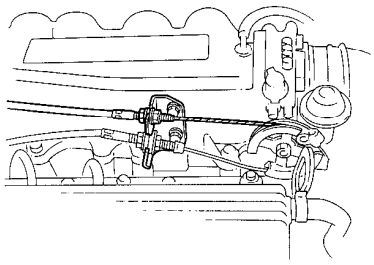	Yes	Go to next step
		No	Replace throttle cable ☞ **page K2–137**
5	Check if line pressure at idle is OK ☞ **page K2–139** **Line pressure:**	Yes	Go to next step
		No	Adjust throttle cable ☞ **page K2–139**
6	Check if time lag is within specification at idle ☞ **page K2–122** **Time lag:** **N → D: 0.5—1.0 second** **N → R: 0.6—1.0 second** 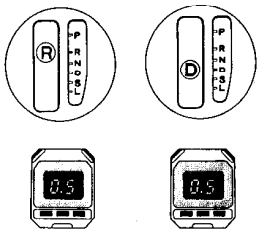	Yes	Go to next step
		No	Check for cause (Refer to Evaluation) ☞ **page K2–122**
7	Check if engine stall speed is OK ☞ **page K2–119** **Engine stall speed: 2,550—2,650 rpm** 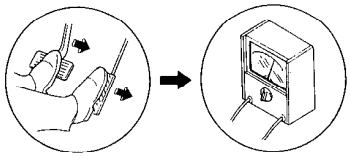	Yes	Go to next step
		No	Check for cause (Refer to Evaluation) ☞ **page K2–121**

Range	Line pressure kPa (kg/cm², psi)	
	Idle	Stall
D,S,L	353—432 (3.6—4.4, 51—63)	873—1,040 (8.9—10.6, 127—151)
R	598—942 (6.1—9.6, 87—137)	1,668—2,011 (17.0—20.5, 242—292)

Downloaded from www.Manualslib.com manuals search engine

STEP	INSPECTION		ACTION
8	Check if line pressure and throttle pressure are within specification ☞ **page K2–123 125** **Line pressure:** Range: D,S,L — Line pressure kPa (kg/cm², psi): Idle 353—432 (3.6—4.4, 51—63); Stall 873—1,040 (8.9—10.6, 127—151) Range: R — Line pressure kPa (kg/cm², psi): Idle 598—942 (6.1—9.6, 87—137); Stall 1,668—2,011 (17.0—20.5, 242—292) **Throttle pressure:** Range: D — Throttle pressure kPa (kg/cm², psi): Idle 39—88 (0.4—0.9, 6—13); Stall 471—589 (4.8—6.0, 68—85)	Yes	Go to next step
		No	Check for cause (Refer to Evaluation) ☞ **page K2–124 126**
9	Try known good EC-AT control unit, control valve assembly, or replace transaxle		

03U0K2-040

Downloaded from www.Manualslib.com manuals search engine

15	EXCESSIVE SHIFT SHOCK WHEN UPSHIFTING AND DOWNSHIFTING

[TROUBLESHOOTING HINTS]

① ATF level low
② Throttle cable misadjusted
③ 2-4 brake band (band servo) misadjusted
④ Accumulator malfunction (1-2 accumulator or 2-3 accumulator)
⑤ Shift solenoid valves stuck (1-2, 2-3, or 3-4)
⑥ Powertrain slippage (Coasting clutch, 3-4 clutch, or 2-4 brake band)
⑦ Control valve stuck (Pressure regulator valve, throttle valve, or throttle modulator valve)
⑧ Hydraulic circuit clogged or leaking (Coasting clutch, 3-4 clutch, or 2-4 brake band)

STEP	INSPECTION		ACTION
1	Check if ATF level is OK ☞ page K2–134 **Level:** **Between notches on HOT side of level gauge at 65°C (149°F)** 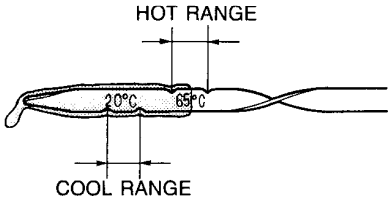 	Yes	Go to next step
		No	Add ATF to specified level ☞ page K2–134
2	Check if ATF condition is OK ☞ page K2–134 ① Clear pink: Normal condition ② Dark or black (with friction material): Worn powertrain components ③ Milky pink: Water contamination ④ Light to dark brown (Oxidation): Overheated or old fluid 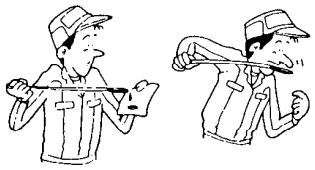	Yes	Go to next step
		No	No.2 condition Overhaul transaxle and repair or replace parts as necessary ☞ page K2–134 No.3 or No.4 condition Replace ATF
3	Check if "00" is displayed on EC-AT Tester with ignition switch ON ☞ page K2–106 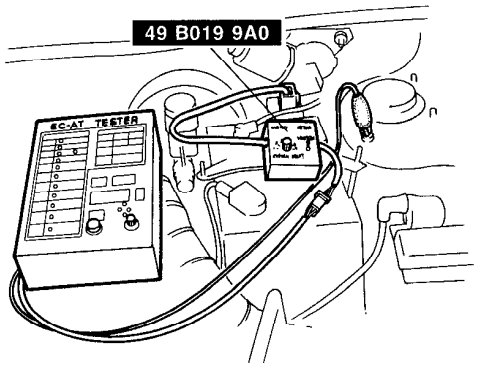 	Yes	Go to next step
		No	**Malfunction Code No. displayed** Check for cause (Refer to specified check sequence) ☞ page K2–108 **No Code No. displayed** Check main relay and voltage of terminals 2Q and 2S of EC-AT control unit **Voltage:** **Approx. 12V (Ignition switch ON)** **"88" flashes** Check wiring between 1C terminal of EC-AT control unit and diagnosis connector ⇨ If OK, replace EC-AT control unit ⇨ If not OK, repair wiring

Downloaded from www.Manualslib.com manuals search engine

STEP	INSPECTION		ACTION
4	Connect EC-AT Tester to EC-AT control unit Check if all output and input component indications are correct	Yes	Go to Steps 6, 11, 13 and 14 in sequence
		No	No indication at all lamps ⇨ Go to next step Individual lamp(s) does not illuminate ⇨ Check for cause
5	Check if voltage at 2Q and 2S terminals of EC-AT control unit is OK ☞ **page K2–144** **Voltage: Approx. 12V (Ignition switch ON)** 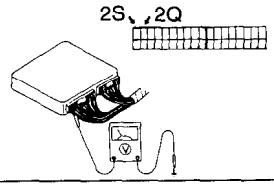	Yes	Go to next step
		No	Repair wiring
6	Check if voltage at 2E, 2G, or 2I terminals of EC-AT control unit is OK ☞ **page K2–144** **Voltage: Approx. 12V (When solenoid ON)** 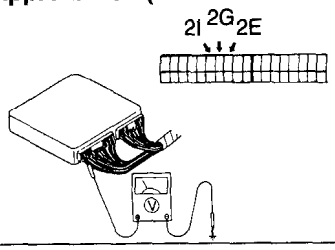	Yes	Go to Step 8
		No	Go to next step
7	Check if continuity in transistors of EC-AT control unit is OK Solenoid valve / Terminal / Continuity 1-2 shift / 2E and 1J or 2P / Yes 2-3 shift / 2G and 1J or 2P / Yes 3-4 shift / 2I and 1J or 2P / Yes	Yes	Go to next step
		No	Replace EC-AT control unit
8	Check if resistance between 2E, 2G, and 2I terminals of EC-AT control unit and ground is OK **Resistance: 13—27Ω** 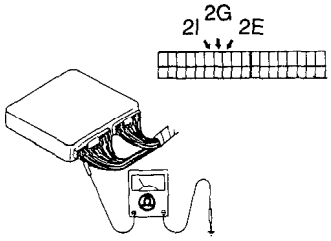	Yes	Go to Step 10
		No	Go to next step

Downloaded from www.Manualslib.com manuals search engine

STEP	INSPECTION		ACTION
9	Check if resistance of solenoid valves is OK ☞ **page K2–143** **Resistance: 13—27Ω** 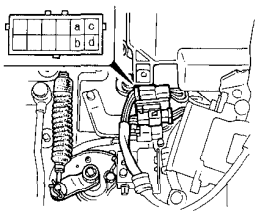	Yes	Check for poor connection at connectors ⇨ If OK, go to next step ⇨ If not OK, repair wiring
		No	Replace solenoid valve
10	Disconnect 20-pin connector of EC-AT control unit Apply 12V to 2E, 2G, and 2I terminals and check if operation sound (clicking) of solenoid is heard	Yes	Try known good EC-AT control unit and go to next step
		No	Replace solenoid valve
11	Check if throttle cable operates smoothly and is installed correctly ☞ **page K2–137** 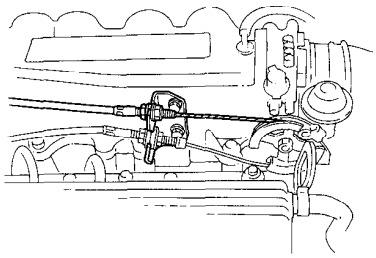	Yes	Go to next step
		No	Replace throttle cable ☞ **page K2–137**
12	Check if line pressure at idle is OK ☞ **page K2–139** **Line pressure:** **402—422 kPa (4.1—4.3 kg/cm^2, 58—61 psi)**	Yes	Go to next step
		No	Adjust throttle cable ☞ **page K2–139**

Downloaded from www.Manualslib.com manuals search engine

STEP	INSPECTION		ACTION
13	Check if time lag is within specification at idle ☞ page K2–122 **Time lag:** **N → D: 0.5—1.0 second** ***N → R: 0.6—1.0 second*** 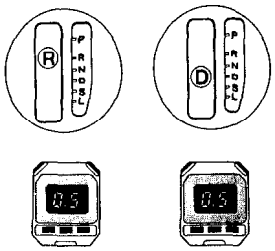	Yes	Go to next step
		No	Check for cause (Refer to Evaluation) ☞ page K2–122
17	Check if engine stall speed is OK ☞ page K2–119 **Engine stall speed: 2,550—2,650 rpm** 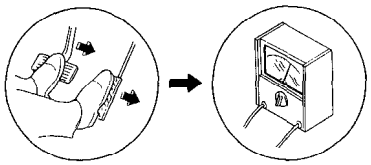	Yes	Go to next step
		No	Check for cause (Refer to Evaluation) ☞ page K2–121
15	Try known good EC-AT control unit, control valve body, or replace transaxle		

03U0K2-041

16	TRANSAXLE NOISY IN N AND P RANGES
DESCRIPTION	• Noise corresponds to engine speed

[TROUBLESHOOTING HINTS]
① ATF level low
② Oil pump worn

STEP	INSPECTION		ACTION
1	Check if ATF level is OK ☞ page K2–134 **Level:** **Between notches on HOT side of level gauge at 65°C (149°F)** 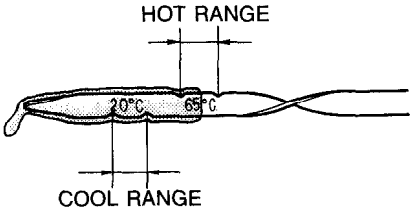	Yes	Go to next step
		No	Add ATF to specified level ☞ page K2–134

Downloaded from www.Manualslib.com manuals search engine

STEP	INSPECTION		ACTION
2	Check if ATF condition is OK ☞ **page K2–134** ① Clear pink: Normal condition ② Dark or black (with friction material): Worn powertrain components ③ Milky pink: Water contamination ④ Light to dark brown (Oxidation): Overheated or old fluid 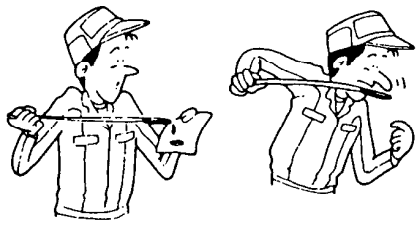	Yes	Go to next step
		No	No.2 condition Overhaul transaxle and repair or replace parts as necessary ☞ **page K2–134** No.3 or No.4 condition Replace ATF
3	Check if engine stall speed is OK ☞ **page K2–110** **Engine stall speed: 2,550—2,650 rpm** 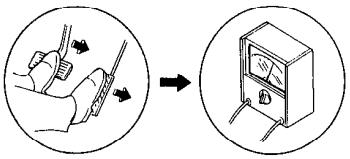	Yes	Go to next step
		No	Check for cause (Refer to Evaluation) ☞ **page K2–121**
4	Check if line pressure and throttle pressure are within specification ☞ **page K2–123 125** **Line pressure:** Range: D,S,L — Line pressure kPa (kg/cm², psi): Idle 353—432 (3.6—4.4, 51—63); Stall 873—1,040 (8.9—10.6, 127—151) Range: R — Line pressure kPa (kg/cm², psi): Idle 598—942 (6.1—9.6, 87—137); Stall 1,668—2,011 (17.0—20.5, 242—292) **Throttle pressure:** Range: D — Throttle pressure kPa (kg/cm², psi): Idle 39—88 (0.4—0.9, 6—13); Stall 471—589 (4.8—6.0, 68—85)	Yes	Go to next step
		No	Check for cause (Refer to Evaluation) ☞ **page K2–124 126**
5	Check for other cause of noise or overhaul transaxle		

03U0K2-042

Downloaded from www.Manualslib.com manuals search engine

17	TRANSAXLE NOISY IN D, S, L AND R RANGES
DESCRIPTION	• Noise corresponds to vehicle speed

[TROUBLESHOOTING HINTS]
① ATF level low
② Differential backlash incorrect
③ Torque converter worn
④ Oil pump worn

STEP	INSPECTION		ACTION
1	Check if ATF level is OK ☞ **page K2–134** **Level:** **Between notches on HOT side of level gauge at 65°C (149°F)** 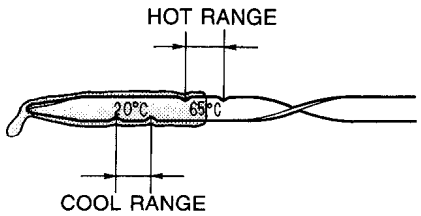 	Yes	Go to next step
		No	Add ATF to specified level ☞ **page K2–134**
2	Check if ATF condition is OK ☞ **page K2–134** ① Clear pink: Normal condition ② Dark or black (with friction material): Worn powertrain components ③ Milky pink: Water contamination ④ Light to dark brown (Oxidation): Overheated or old fluid 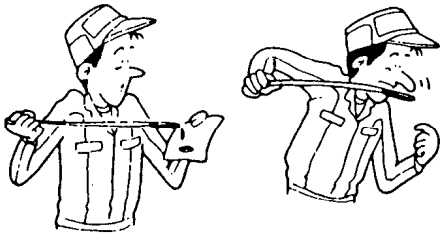	Yes	Go to next step
		No	No.2 condition Overhaul transaxle and repair or replace parts as necessary ☞ **page K2–134** No.3 or No.4 condition Replace ATF
3	Check if engine stall speed is OK ☞ **page K2–119** **Engine stall speed: 2,550—2,650 rpm** 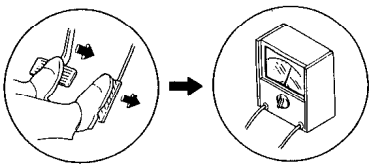	Yes	Go to next step
		No	Check for cause (Refer to Evaluation) ☞ **page K2–121**

Downloaded from www.Manualslib.com manuals search engine

<table>
<tr><th>STEP</th><th>INSPECTION</th><th colspan="2">ACTION</th></tr>
<tr><td rowspan="2">4</td><td rowspan="2">Check if line pressure and throttle pressure are within specification
☞ page K2–123 125

Line pressure:
<table>
<tr><th rowspan="2">Range</th><th colspan="2">Line pressure kPa (kg/cm², psi)</th></tr>
<tr><th>Idle</th><th>Stall</th></tr>
<tr><td>D,S,L</td><td>353—432
(3.6—4.4, 51—63)</td><td>873—1,040
(8.9—10.6, 127—151)</td></tr>
<tr><td>R</td><td>598—942
(6.1—9.6, 87—137)</td><td>1,668—2,011
(17.0—20.5, 242—292)</td></tr>
</table>
Throttle pressure:
<table>
<tr><th rowspan="2">Range</th><th colspan="2">Throttle pressure kPa (kg/cm², psi)</th></tr>
<tr><th>Idle</th><th>Stall</th></tr>
<tr><td>D</td><td>39—88
(0.4—0.9, 6—13)</td><td>471—589
(4.8—6.0, 68—85)</td></tr>
</table></td><td>Yes</td><td>Go to next step</td></tr>
<tr><td>No</td><td>Check for cause (Refer to Evaluation) ☞ page K2–124 126</td></tr>
<tr><td>5</td><td colspan="3">Check other cause of noise or overhaul transaxle</td></tr>
</table>

03U0K2-043

Downloaded from www.Manualslib.com manuals search engine

18	NO ENGINE BRAKING
DESCRIPTION	• No engine braking as follows D range (Normal and Hold mode): 3rd and OD S range (Normal mode): 3rd S range (Hold mode): 2nd L range (Normal mode): 2nd L range (Hold mode): 1st

[TROUBLESHOOTING HINTS]
① ATF level low
② Shift solenoid valve stuck (1-2 shift valve or 2-3 shift valve)
③ Powertrain slippage (Coasting clutch, or low and reverse brake)
④ Control valve stuck (1-2 shift valve, 2-3 shift valve, low reducing valve, or manual valve)
⑤ Hydraulic circuit clogged or leaking (Coasting clutch, or low and reverse brake)

STEP	INSPECTION		ACTION
1	Check if ATF level is OK ☞ **page K2–134** **Level:** **Between notches on HOT side of level gauge at 65°C (149°F)** 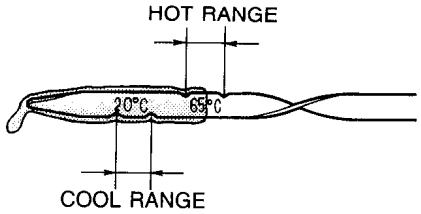 	Yes	Go to next step
		No	Add ATF to specified level ☞ **page K2–134**
2	Check if ATF condition is OK ☞ **page K2–134** ① Clear pink: Normal condition ② Dark or black (with friction material): Worn powertrain components ③ Milky pink: Water contamination ④ Light to dark brown (Oxidation): Overheated or old fluid 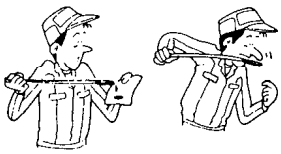	Yes	Go to next step
		No	No.2 condition Overhaul transaxle and repair or replace parts as necessary ☞ **page K2–134** No.3 or No.4 condition Replace ATF
3	Check if "00" is displayed on EC-AT Tester with ignition switch ON ☞ **page K2–106** 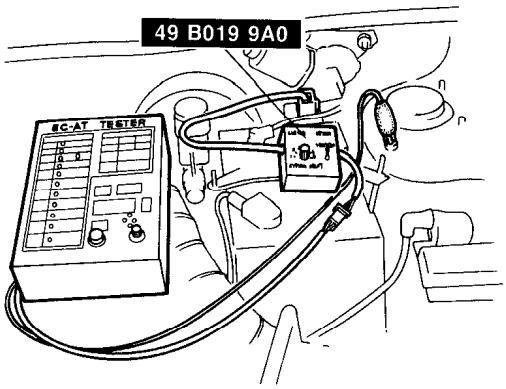 	Yes	Go to next step
		No	**Malfunction Code No. displayed** Check for cause (Refer to specified check sequence) ☞ **page K2–108** **No Code No. displayed** Check main relay and voltage of terminals 2Q and 2S of EC-AT control unit **Voltage:** **Approx. 12V (Ignition switch ON)** **"88" flashes** Check wiring between 1C terminal of EC-AT control unit and diagnosis connector ⇨ If OK, replace EC-AT control unit ⇨ If not OK, repair wiring

Downloaded from www.Manualslib.com manuals search engine

STEP	INSPECTION		ACTION
4	Connect EC-AT Tester to EC-AT control unit Check if all output and input component indications are correct (Especially solenoid valves)	Yes	Go to Steps 6, 10, 11 and 12 in sequence
		No	No indication at all lamps ⇨ Go to next step Individual lamp(s) does not illuminate ⇨ Check for cause
5	Check if voltage at 2Q and 2S terminals of EC-AT control unit is OK ☞ **page K2–144** **Voltage: Approx. 12V (Ignition switch ON)** 2S 2Q 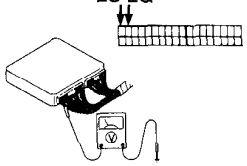	Yes	Go to next step
		No	Repair wiring
6	Check of continuity in transistors in EC-AT control unit is OK	Yes	Go to next step
		No	Replace EC-AT control unit
7	Check if resistance between 2E, and 2G terminals of EC-AT control unit and ground is OK **Resistance: 13—27Ω** 2G 2E 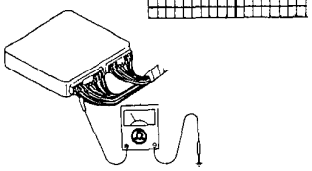	Yes	Go to Step 9
		No	Go to next step

Solenoid valve	Terminal	Continuity
1-2 shift	2E and 1J or 2P	Yes
2-3 shift	2G and 1J or 2P	Yes
3-4 shift	2I and 1J or 2P	Yes

Downloaded from www.Manualslib.com manuals search engine

STEP	INSPECTION		ACTION
8	Check if resistance of solenoid valves is OK ☞ **page K2–143** **Resistance: 13—27Ω** 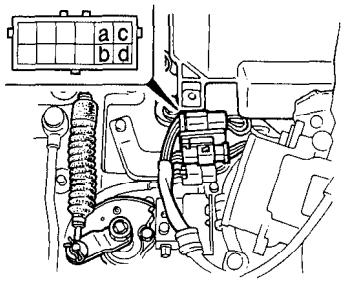	Yes	Check for poor connection at connectors ⇨ If OK, go to next step ⇨ If not OK, repair wiring
		No	Replace solenoid valve
9	Disconnect 20-pin connector of EC-AT control unit Apply 12V to 2E and 2G terminals and check if operation sound (clicking) of solenoid is heard	Yes	Try known good EC-AT control unit and go to next step
		No	Replace solenoid valve
10	Check if time lag is within specified at idle ☞ **page K2–122** **Time lag** **N → D: 0.5—1.0 second** **N → R: 0.6—1.0 second** 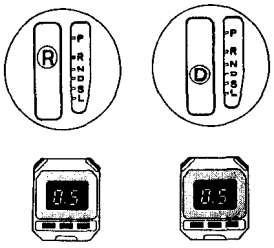	Yes	Go to next step
		No	Check for cause (Refer to Evaluation) ☞ **page K2–122**
11	Check if engine stall speed is OK ☞ **page K2–119** **Engine stall speed: 2,550—2,650 rpm** 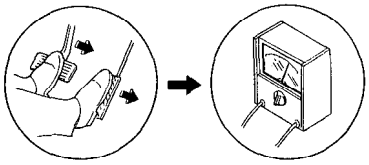	Yes	Go to next step
		No	Check for cause (Refer to Evaluation) ☞ **page K2–121**

Downloaded from www.Manualslib.com manuals search engine

STEP	INSPECTION		ACTION
12	Check if line pressure and throttle pressure are within specification ☞ page K2–123 125 **Line pressure:** Range: D,S,L — Line pressure kPa (kg/cm², psi): Idle 353—432 (3.6—4.4, 51—63); Stall 873—1,040 (8.9—10.6, 127—151) Range: R — Line pressure kPa (kg/cm², psi): Idle 598—942 (6.1—9.6, 87—137); Stall 1,668—2,011 (17.0—20.5, 242—292) **Throttle pressure:** Range: D — Throttle pressure kPa (kg/cm², psi): Idle 39—88 (0.4—0.9, 6—13); Stall 471—589 (4.8—6.0, 68—85)	Yes	Go to next step
		No	Check for cause (Refer to Evaluation) ☞ page K2–124 126
13	Try known good EC-AT control unit, control valve assembly, solenoid valves, or replace transaxle		

03U0K2-044

Downloaded from www.Manualslib.com manuals search engine

19	NO MODE CHANGES
DESCRIPTION	• Hold mode cannot be selected or is not canceled when ignition switch turned OFF

[TROUBLESHOOTING HINTS]
① Hold switch circuit shorted
② Throttle sensor malfunction or misadjusted
③ ATF thermosensor malfunction
④ Vehicle speed sensor malfunction
⑤ Pulse generator malfunction
⑥ Solenoid valves stuck

STEP	INSPECTION		ACTION
1	Check if "00" is displayed on EC-AT Tester with ignition switch ON ☞ **page K2–106** 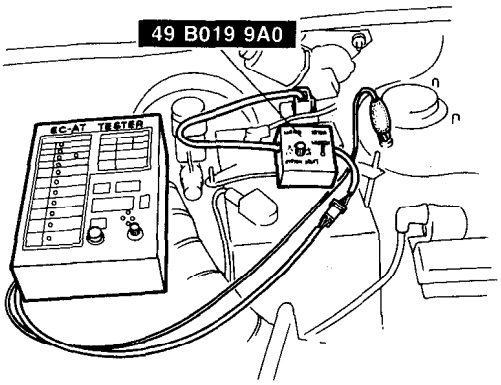	Yes	Go to next step
		No	**Malfunction Code No. displayed** Check for cause (Refer to specified check sequence) ☞ **page K2–108** **No Code No. displayed** Check main relay and voltage of terminals 2Q and 2S of EC-AT control unit **Voltage:** **Approx. 12 (Ignition switch ON)**
			"88" flashes Check wiring between 1C terminal of EC-AT control unit and diagnosis connector ⇨ If OK, replace EC-AT control unit ⇨ If not OK, repair wiring
2	Connect EC-AT Tester to EC-AT control unit Check if all output and input component indications are correct (Especially hold switch, solenoid valves, ATF thermosensor, shift signal, throttle sensor voltage, vehicle speed, and drum speed)	Yes	Go to Steps 4, 7, 9, 11, 14 and 16 in sequence
		No	No indication at all lamps ⇨ Go to next step Individual lamp(s) does not illuminate ⇨ Check for cause
3	Check if voltage at 2Q and 2S terminals of EC-AT control unit is OK ☞ **page K2–144** **Voltage: Approx. 12V (Ignition switch ON)** 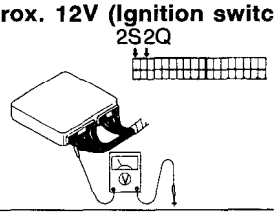	Yes	Go to next step
		No	Repair wiring
4	Check if voltage at 1H terminal of EC-AT control unit is OK ☞ **page K2–144** **Voltage: Approx. 12V (Hold switch released)** 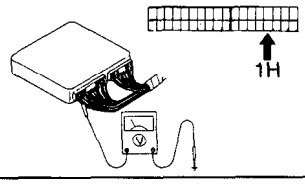	Yes	Go to Step 7
		No	Go to next step

Downloaded from www.Manualslib.com manuals search engine

STEP	INSPECTION		ACTION
5	Check if continuity between a terminal of hold switch and 1H terminal of EC-AT control unit is OK	Yes	Go to next step
		No	Repair wiring
6	Check if operation of hold switch is OK ☞ **page K2–140** Switch / Continuity Depressed / No Released / Yes 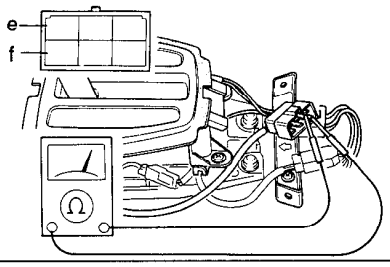 	Yes	Check for open or short circuit of wiring and poor connection at connectors ⇨ If OK, go to next step ⇨ If not OK, repair wiring
		No	Replace selector lever knob assembly
7	Measure resistance while warming up ATF (driving vehicle) Check if resistance between 1G terminal and 1J or 2P terminals of EC-AT control unit is OK	Yes	Go to Step 22
		No	Go to next step
8	Check if resistance between terminals of ATF thermosensor is OK 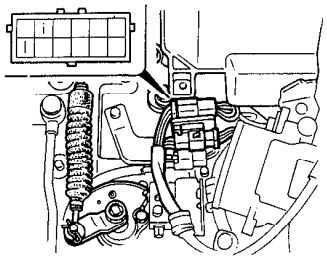	Yes	Check for poor connection at connectors ⇨ If OK, try known good EC-AT control unit or ATF thermosensor and go to next step ⇨ If not OK, repair wiring
		No	Go to next step

Downloaded from www.Manualslib.com manuals search engine

STEP	INSPECTION		ACTION
9	Drive vehicle above 80 km/h (50 mph) in D range OD Check if voltage at 2K terminal of EC-AT control unit is OK ☞ **page K2–144** **Approx. 12V: Lockup solenoid ON (Lockup)** 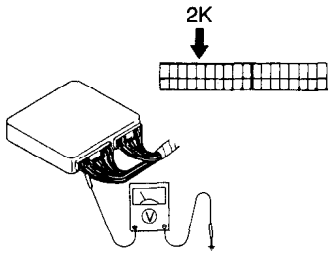	Yes	Go to Step 14
		No	Go to next step
10	Check if continuity of transistors in EC-AT control unit is OK Solenoid valve / Terminal / Continuity 1-2 shift / 2E and 1J or 2P / Yes 2-3 shift / 2G and 1J or 2P / Yes 3-4 shift / 2I and 1J or 2P / Yes Lockup / 2K and 1J or 2P / Yes	Yes	Go to next step
		No	Replace EC-AT control unit
11	Check if resistance between 2E, 2G, 2I, or 2K terminals of EC-AT control unit and ground is OK **Resistance: 13—27Ω** 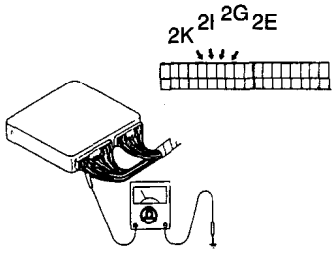	Yes	Go to Step 13
		No	Go to next step
12	Check if resistance of solenoid valve(s) is OK ☞ **page K2–143** **Resistance: 13—27Ω** 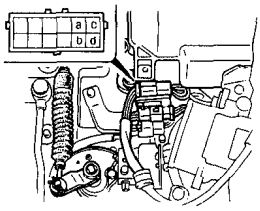	Yes	Check for poor connection at connectors ⇨ If OK, go to next step ⇨ If not OK, repair wiring
		No	Replace solenoid valve

Downloaded from www.Manualslib.com manuals search engine

STEP	INSPECTION		ACTION
13	Disconnect 20-pin connector of EC-AT control unit Apply 12V to 2E, 2G, 2I and 2K terminals and check if operation sound (clicking) of solenoid is heard	Yes	Try known good EC-AT control unit and go to next step
		No	Replace solenoid valve
14	Apply 12V to 2K terminal of EC-AT control unit Start engine in P range and let it idle Shift to D range and check if engine stalls	Yes	Go to next step
		No	Replace lockup solenoid valve
15	Check if voltage at 2A and 2T terminals of EC-AT control unit is OK ☞ **page K2–144** Terminal: 2A — Voltage (V): 5 (Ignition switch ON) Terminal: 2T — Voltage (V): 0.4—4.4 (Accelerator closed to open) 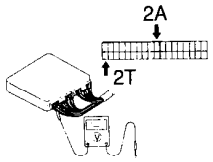	Yes	Go to Step 16
		No	Check for poor connection at connectors ⇨ If OK, go to next step ⇨ If not OK, repair wiring
16	Check if throttle sensor is OK ☞ **page *F–143** 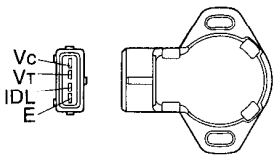	Yes	Check for open or short circuit of wiring and poor connection at connectors ⇨ If OK, go to next step ⇨ If not OK, repair wiring
		No	Adjust or replace throttle sensor ☞ **page *F–143**
17	Disconnect 20-pin connector of EC-AT control unit Check if resistance between 2J terminal and 2L terminal of EC-AT control unit is OK **Resistance: 200—400Ω** 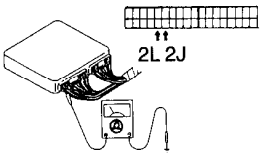	Yes	Go to Step 19
		No	Go to next step

* Refer to 1990 323 Workshop Manual (1195-10-89E).

Downloaded from www.Manualslib.com manuals search engine

STEP	INSPECTION		ACTION
18	Check if resistance of pulse generator is OK ☞ **page K2–142** **Resistance: 200—400Ω** 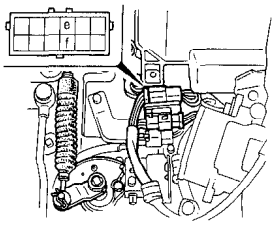	Yes	Check for poor connection at connectors and go to next step
		No	Replace pulse generator
19	Connect oscilloscope ground terminal to 2L terminal of EC-AT control unit, and oscilloscope input terminal to 2J terminal of EC-AT control unit Check if pulse display is OK 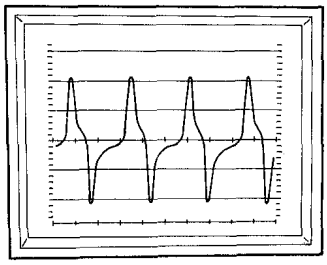	Yes	Check for open or short circuit of wiring and poor connection at connectors ⇨ If OK, go to next step ⇨ If not OK, repair wiring
		No	Very low voltage: Replace pulse generator
			Noise in wave form: Check for improper grounding of shield-wiring or replace pulse generator
20	Try known good EC-AT control unit		

03U0K2-045

Downloaded from www.Manualslib.com manuals search engine

20	TRANSAXLE OVERHEATS
DESCRIPTION	• Burned smell from transaxle

[TROUBLESHOOTING HINTS]
① ATF level low
② Lockup solenoid stuck
③ ATF thermosensor malfunction
④ Oil pump worn
⑤ Torque converter worn

STEP	INSPECTION		ACTION
1	Check if ATF level is OK ☞ **page K2–134** **Level:** **Between notches on HOT side of level gauge at 65°C (149°F)** 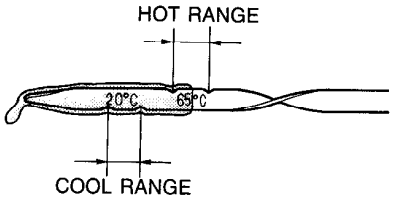 	Yes	Go to next step
		No	Add ATF to specified level ☞ **page K2–134**
2	Check if ATF condition is OK ☞ **page K2–134** ① Clear pink: Normal condition ② Dark or black (with friction material): Worn powertrain components ③ Milky pink: Water contamination ④ Light to dark brown (Oxidation): Overheated or old fluid 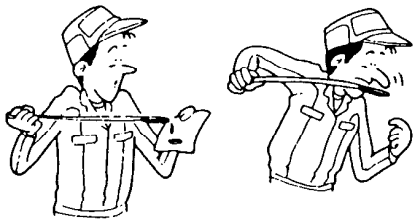	Yes	Go to next step
		No	No.2 condition Overhaul transaxle and repair or replace parts as necessary ☞ **page K2–134** No.3 or No.4 condition Replace ATF
3	Connect EC-AT Tester to EC-AT control unit Check if all output and input component indications are correct (Especially lockup solenoid valve)	Yes	Go to Steps 5, 8, 10, 11 and 12 in sequence
		No	No indication at all lamps ⇨ Go to next step Individual lamp(s) does not illuminate ⇨ Check for cause

Downloaded from www.Manualslib.com manuals search engine

STEP	INSPECTION		ACTION
4	Check if voltage at 2Q and 2S terminals of EC-AT control unit is OK ☞ **page K2–144** **Voltage: Approx. 12V (Ignition switch ON)** 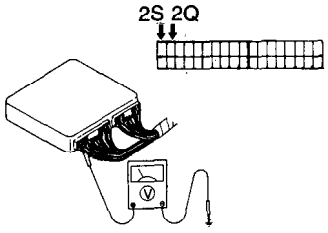 	Yes	Go to next step
		No	Repair wiring
5	Drive vehicle above 80 km/h (50 mph) in D range OD Check if voltage at terminal 2K of EC-AT control unit is OK ☞ **page K2–144** **Voltage: Approx. 12V (Lockup solenoid ON [Lockup])** 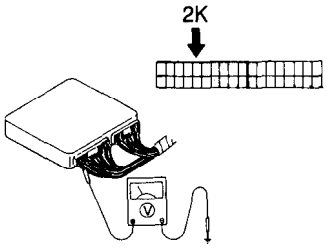 	Yes	Go to Step 7
		No	Go to next step
6	Check if continuity of transistor in EC-AT control unit is OK Terminal: 2K and 1J or 2P Continuity: Yes	Yes	Go to next step
		No	Replace EC-AT control unit
7	Apply 12V to 2K terminal of EC-AT control unit Start engine in P range and let it idle Shift to D range and check if engine stalls	Yes	Go to next step
		No	Replace lockup solenoid valve

Downloaded from www.Manualslib.com manuals search engine

STEP	INSPECTION		ACTION
8	Measure resistance while warming up ATF (driving vehicle) Check for correct resistance between G terminal and J or 2P terminals of EC-AT control unit	Yes	Go to Step 10
		No	Go to next step
9	Check for correct resistance between terminals of ATF thermosensor ☞ **page K2–142** 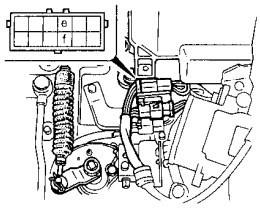	Yes	Check for poor connection at connectors ⇨ If OK, try known good EC-AT control unit or ATF thermosensor and go to next step ⇨ If not OK, replace wiring
		No	Go to next step
10	Check if time lag is within specification at idle ☞ **page K2–122** **Time lag** **N → D: 0.5—1.0 second** **N → R: 0.6—1.0 second** 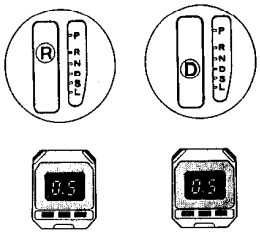	Yes	Go to next step
		No	Check for cause (Refer to Evaluation) ☞ **page K2–122**
11	Check if engine stall speed is OK ☞ **page K2–119** **Engine stall speed: 2,550—2,650 rpm** 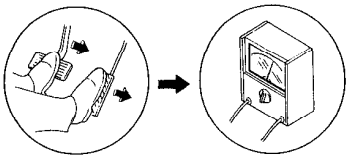	Yes	Go to next step
		No	Check for cause (Refer to Evaluation) ☞ **page K2–121**

Downloaded from www.Manualslib.com manuals search engine

STEP	INSPECTION		ACTION
12	Check if line pressure and throttle pressure are within specification ☞ **page K2–123 125** **Line pressure:** Range: D,S,L — Line pressure kPa (kg/cm², psi): Idle 353—432 (3.6—4.4, 51—63); Stall 873—1,040 (8.9—10.6, 127—151) Range: R — Line pressure kPa (kg/cm², psi): Idle 598—942 (6.1—9.6, 87—137); Stall 1,668—2,011 (17.0—20.5, 242—292) **Throttle pressure:** Range: D — Throttle pressure kPa (kg/cm², psi): Idle 39—88 (0.4—0.9, 6—13); Stall 471—589 (4.8—6.0, 68—85)	Yes	Go to next step
		No	Check for cause (Refer to Evaluation) ☞ **page K2–124 126**
13	Try known good EC-AT control unit, control valve assembly, or replace transaxle		

03U0K2-046

Downloaded from www.Manualslib.com manuals search engine

21	HOLD INDICATOR LAMP FLASHES
DESCRIPTION	• Malfunction in EC-AT system component (Vehicle speed sensor, pulse generator, shift signal, or solenoid valve(s))

[TROUBLESHOOTING HINTS]
Check for Malfunction Code No. and repair system (Refer to SELF-DIAGNOSIS FUNCTION; page K2–104)

STEP	INSPECTION		ACTION
1	Connect EC-AT Tester to diagnosis connector and set TEST SW to SELF TEST Check if Malfunction Code No. is displayed	Yes	**Malfunction Code No. displayed** Check for cause (Refer to specified check sequence) ☞ **page K2–108**
		No	**No Code No. displayed** Check main relay, and voltage of terminals 2Q and 2S of EC-AT control unit **Voltage:** **Approx. 12V (Ignition switch ON)**
			"88" flashes Check wiring between terminal 1C of EC-AT control unit and diagnosis connector ⇨ If OK, replace EC-AT control unit ⇨ If not OK, repair wiring

Code No.	LOCATION OF MALFUNCTION
06	Vehicle speed sensor
12	Throttle sensor
55	Pulse generator
60	1-2 shift solenoid valve
61	2-3 shift solenoid valve
62	3-4 shift solenoid valve
63	Lockup solenoid valve

03U0K2-047

Downloaded from www.Manualslib.com manuals search engine

22	ENGINE WILL NOT START IN N OR P RANGE OR WILL START IN OTHER RANGES		
[TROUBLESHOOTING HINTS] ① Inhibitor switch worn or misadjusted ② Selector lever misinstalled or misadjusted			
STEP	**INSPECTION**		**ACTION**
1	Check if selector lever operation is OK ☞ **page *K–264** 	Yes	Go to next step
		No	Adjust or repair selector lever ☞ **page *K–264**
2	Check if "00" is displayed on EC-AT Tester with ignition switch ON ☞ **page K2–106** 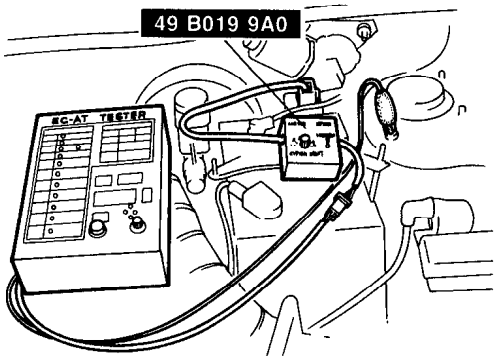 	Yes	Go to next step
		No	**Malfunction Code No. displayed** Check for cause (Refer to specified check sequence) ☞ **page K2–108** **No Code No. displayed** Check main relay and voltage of terminals 2Q and 2S of EC-AT control unit **Voltage:** **Approx. 12V (Ignition switch ON)** **"88" flashes** Check wiring between 1C terminal of EC-AT control unit and diagnosis connector ⇨ If OK, replace EC-AT control unit ⇨ If not OK, repair wiring
3	Connect EC-AT Tester to EC-AT control unit Check if all output and input component indications are correct (Especially inhibitor switch) ☞ **page K2–115**	Yes	Go to Step 7
		No	No indication at all lamps ⇨ Go to next step Individual lamp(s) does not illuminate ⇨ Check for cause
4	Check if voltage at 2Q and 2S terminals of EC-AT control unit is OK ☞ **page K2–144** **Voltage: Approx. 12V (Ignition switch ON)** 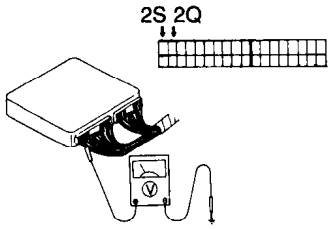 	Yes	Go to next step
		No	Repair wiring

* Refer to 1990 323 Workshop Manual (1195-10-89E).

Downloaded from www.Manualslib.com manuals search engine

STEP	INSPECTION		ACTION
5	Check if voltage at 2B, 2D, 2F, and 2H terminals of EC-AT control unit is OK ☞ **page K2–144** **Voltage:** **Approx. 12V (D,S,L range switch ON)** **Below 1.5V (P or N range switch ON)** 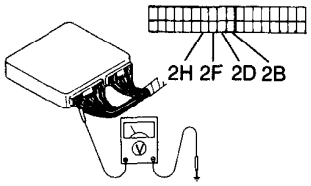	Yes	Check other cause of malfunction
		No	Go to next step
6	Check for correct continuity between each terminal of inhibitor switch and terminal of EC-AT control unit	Yes	Go to next step
		No	Repair wiring
7	Check if operation of inhibitor switch is OK ☞ **page K2–140** 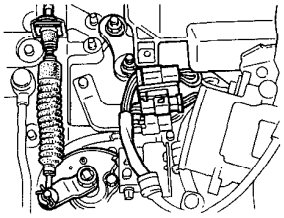	Yes	Check for open or short circuit of wiring and poor connection at connectors ⇨ If OK, go to next step ⇨ If not OK repair wiring
		No	Replace inhibitor switch ☞ **page K2–141**
8	Check other cause of malfunction or try known good EC-AT control unit and see if condition improves		

03U0K2-048

Downloaded from www.Manualslib.com manuals search engine

23	ENGINE STALLS WHEN SHIFTED TO D, S, L, AND R RANGES
DESCRIPTION	• Engine stalls when shifting from N or P range to D, S, L, or R range and strong shift shock • Engine will start and run in P and N ranges

[TROUBLESHOOTING HINTS]
① Engine idle speed misadjusted
② Stoplight switch or circuit shorted
③ Inhibitor switch worn or misadjusted
④ Pulse generator malfunction
⑤ Lockup solenoid stuck
⑥ Lockup control valve stuck
⑦ Powertrain slippage (Forward clutch)
⑧ Torque converter worn

STEP	INSPECTION		ACTION
1	Connect EC-AT Tester to EC-AT control unit Check if all output and input component indications are correct (Especially inhibitor switch, stoplight switch, lockup solenoid valve and drum speed)	Yes	Go to Steps 3, 6, 9, 12, 15 and 16 in sequence
		No	No indication at all lamps ⇨ Go to next step Individual lamp(s) does not illuminate ⇨ Check for cause
2	Check if voltage at 2Q and 2S terminals of EC-AT control unit is OK ☞ **page K2–144** **Voltage: Approx. 12V (Ignition switch ON)** 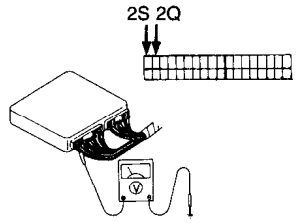 	Yes	Go to next step
		No	Repair wiring
3	Drive vehicle above 80 km/h (50 mph) in D range OD Check if voltage at 2K terminal of EC-AT control unit is OK ☞ **page K2–144** **Voltage: Approx. 12V (Lockup solenoid ON [Lockup])** 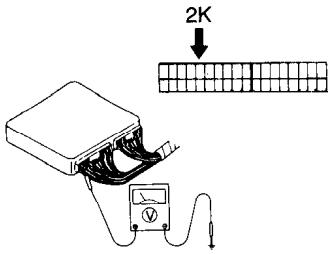 	Yes	Go to Step 6
		No	Go to next step

Downloaded from www.Manualslib.com manuals search engine

STEP	INSPECTION		ACTION
4	Check if continuity of transistor in EC-AT control unit is OK Terminal: 2K and 1J or 2P Continuity: Yes	Yes	Go to next step
		No	Replace EC-AT control unit
5	Apply 12V to 2K terminal of EC-AT control unit Start engine in P range and let it idle Shift to D range and check if engine stalls	Yes	Go to next step
		No	Replace solenoid valve
6	Disconnect 20-pin connector of EC-AT control unit Check if resistance between 2J and 2L terminals of EC-AT control unit is OK **Resistance: 200—400Ω** 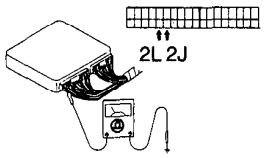	Yes	Go to Step 8
		No	Go to next step
7	Check if resistance of pulse generator is OK ☞ **page K2–142** **Resistance: 200—400Ω** 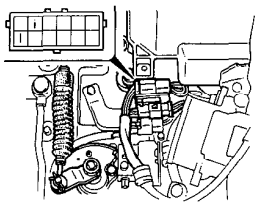	Yes	Check for poor connection at connectors and go to next step
		No	Replace pulse generator

Downloaded from www.Manualslib.com manuals search engine

STEP	INSPECTION		ACTION
8	Connect oscilloscope ground terminal to 2L terminal of EC-AT control unit, and oscilloscope input terminal to 2J terminal of EC-AT control unit Check if pulse display is OK 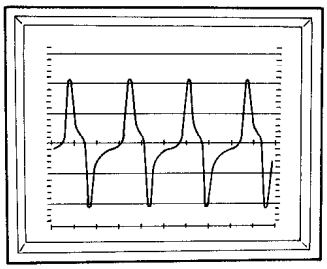	Yes	Go to next step
		No	Very low voltage: Replace pulse generator
			Noise in wave form: Check for improper grounding of shield-wiring or replace pulse generator
9	Check if voltage at 1F terminal of EC-AT control is OK **Voltage:** **Approx. 12V (Brake pedal depressed)** 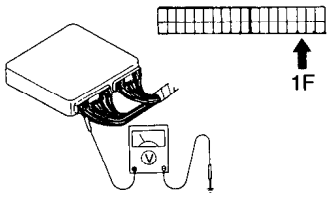	Yes	Go to Step 12
		No	Go to next step
10	Check for continuity between terminal 1F of EC-AT control unit and stoplight switch	Yes	Go to next step
		No	Repair wiring
11	Check if operation of stoplight switch is OK ☞ **page *T–45** Switch: Depressed — Continuity: Yes Switch: Released — Continuity: No 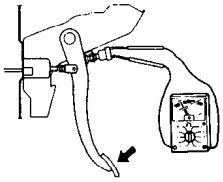	Yes	Check for short or open circuit of wiring and poor connection at connector ⇨ If OK, go to next step ⇨ If not OK, repair wiring
		No	Replace stoplight switch

* Refer to 1990 323 Workshop Manual (1195-10-89E).

Downloaded from www.Manualslib.com manuals search engine

STEP	INSPECTION		ACTION
12	Check if voltage at 2B, 2D, 2F, and 2H terminal of EC-AT control unit is OK ☞ **page K2–144** **Voltage:** **Approx. 12V (D,S,L ranges switch ON)** **Below. 1.5V (P or N ranges switch ON)** 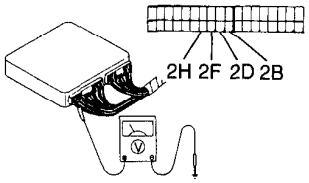	Yes	Go to Step 15
		No	Go to next step
13	Check if continuity between each terminal of inhibitor switch and terminal of EC-AT control unit is OK	Yes	Go to next step
		No	Repair of replace wiring
14	Check if operation of inhibitor switch is OK ☞ **page K2–140** 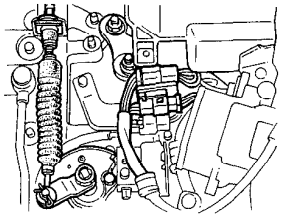	Yes	Check for open or short circuit of wiring and poor connection at connectors ⇨ If OK, go to next step ⇨ If not OK, repair or replace
		No	Replace inhibitor switch ☞ **page K2–141**
15	Check if ignition timing at idle is OK ☞ **page *F–72** **Ignition timing (BTDC): 7 ± 1°** 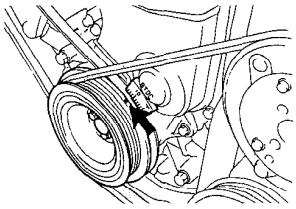	Yes	Check for correct idle speed ☞ **page *F–72** **Idle speed: 750 ± 50 rpm** **(with parking brake applied)** ⇨ If OK, go to next step ⇨ If not OK, adjust idle speed ☞ **page *F–72**
		No	Adjust ignition timing ☞ **page *F–72**

* Refer to 1990 323 Workshop Manual (1195-10-89E).

Downloaded from www.Manualslib.com manuals search engine

STEP	INSPECTION		ACTION
16	Check if engine stall speed is OK ☞ **page K2–119** **Engine stall speed: 2,550—2,650 rpm** 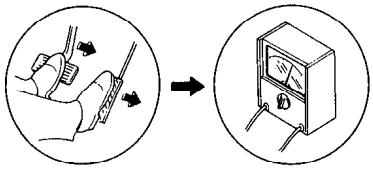	Yes	Go to next step
		No	Check for cause (Refer to Evaluation) ☞ **page K2–121**
17	Check engine control system or Try known good EC-AT control unit, control valve assembly or replace transaxle		

03U0K2-049

Downloaded from www.Manualslib.com manuals search engine

24	ENGINE STALLS WHEN BRAKE PEDAL DEPRESSED WHILE DRIVING AT LOW SPEED OR STOPPING
DESCRIPTION	• Engine stalls with strong shift shock

[TROUBLESHOOTING HINTS]
① Engine idle speed misadjusted
② ATF thermosensor malfunction
③ Pulse generator malfunction
④ Lockup solenoid stuck
⑤ Lockup control valve stuck
⑥ Torque converter worn
⑦ Hydraulic circuit clogged or leaking

STEP	INSPECTION		ACTION
1	Connect EC-AT Tester to EC-AT control unit Check if all output and input component indications are correct (Especially lockup solenoid valve, ATF thermosensor, and drum speed)	Yes	Go to Steps 3, 6, 9, 10 and 12 in sequence
		No	No indication at all lamps ⇨ Go to next step Individual lamp(s) does not illuminate ⇨ Check for cause
2	Check if voltage at 2Q and 2S terminals of EC-AT control unit is OK ☞ **page K2–144** **Voltage: Approx. 12V (Ignition switch ON)** 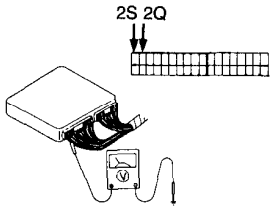 	Yes	Go to next step
		No	Repair wiring
3	Drive vehicle above 80 km/h (50 mph) in D range OD Check if voltage at 2K terminal of EC-AT control unit is OK ☞ **page K2–144** **Voltage: Approx. 12V (Lockup solenoid ON [Lockup])** 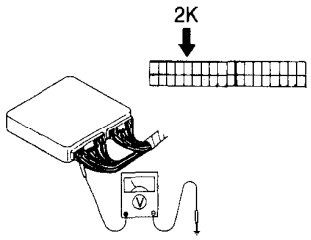 	Yes	Go to Step 6
		No	Go to next step

Downloaded from www.Manualslib.com manuals search engine

STEP	INSPECTION		ACTION
4	Check if continuity of transistor in EC-AT control unit is OK Terminal: 2K and 1J or 2P Continuity: Yes	Yes	Go to next step
		No	Replace EC-AT control unit
5	Apply 12V to 2K terminal of EC-AT control unit Start engine in P range and let it idle Shift to D range and check if engine stalls	Yes	Go to next step
		No	Replace solenoid valve
6	Disconnect 20-pin connector of EC-AT control unit Check if resistance between 2J terminal and 2L terminals of EC-AT control unit is OK **Resistance: 200—400Ω** 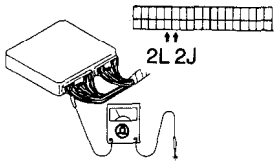	Yes	Go to Step 9
		No	Go to next step
7	Check if resistance of pulse generator is OK ☞ **page K2–142** **Resistance: 200—400Ω** 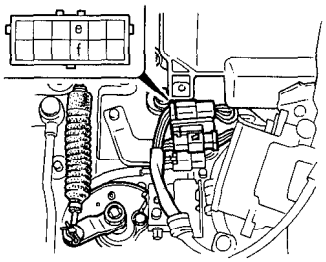	Yes	Check for poor connection at connectors and go to next step
		No	Replace pulse generator

Downloaded from www.Manualslib.com manuals search engine

STEP	INSPECTION		ACTION
8	Connect oscilloscope ground terminal to 2L terminal of EC-AT control unit, and oscilloscope input terminal to 2J terminal of EC-AT control unit Check if pulse display is OK 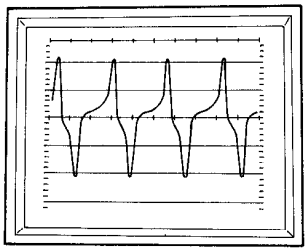	Yes	Go to next step
		No	Very low voltage: Replace pulse generator
			Noise in wave form Check improper grounding of shield-wiring or replace pulse generator
9	Check if ignition timing at idle is OK ☞ **page *F–72** **Ignition timing (BTDC): 7 ± 1°** 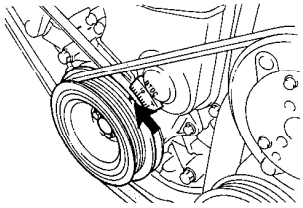	Yes	Check for correct idle speed ☞ **page *F–72** **Idle speed: 750 ± 50 rpm** **(with parking brake applied)** ⇨ If OK, go to next step ⇨ If not OK, adjust idle speed ☞ **page *F–72**
		No	Adjust ignition timing ☞ **page *F–72**
10	Measure resistance while warming up ATF (driving vehicle) Check for correct resistance between 1G terminal and J or 2P terminals of EC-AT control unit	Yes	Go to Step 12
		No	Go to next step
11	Check for correct resistance between terminal and terminals of ATF thermosensor 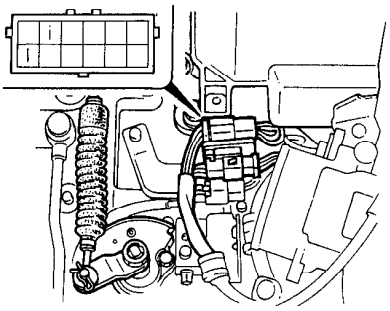	Yes	Check for poor connection at connectors ⇨ If OK, try known good EC-AT control unit or ATF thermosensor and go to next step ⇨ If not OK, repair wiring
		No	Go to next step

* Refer to 1990 323 Workshop Manual (1195-10-89E).

Downloaded from www.Manualslib.com manuals search engine

STEP	INSPECTION		ACTION
12	Check if engine stall speed is OK ☞ **page K2–119** **Engine stall speed: 2,550—2,650 rpm** 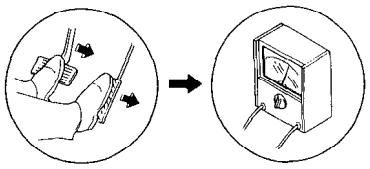	Yes	Go to next step
		No	Check for cause (Refer to Evaluation) ☞ **page K2–121**
13	Try known good EC-AT control unit, control valve assembly, or replace transaxle		

03U0K2-050

Downloaded from www.Manualslib.com manuals search engine

SELF-DIAGNOSIS FUNCTION

DESCRIPTION

The self-diagnostic system integrated in the EC-AT control unit diagnoses malfunction of the main sensors (input) and solenoid valves (output) and the EC-AT control unit.
Malfunctions or intermittent malfunctions are memorized in the EC-AT control unit to later be output as malfunction codes.
The **EC-AT Tester and EC-AT Selector** are used to retrieve these malfunction codes. Each malfunction is indicated by a code number and the buzzer.
Use the plate 323 2WD model.

03U0K2-308

PREPARATION
SST

49 B019 9A0 System Selector	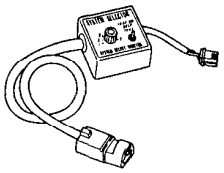	For inspection of input and output devices

03U0KX-049

EC-AT TESTER
Components

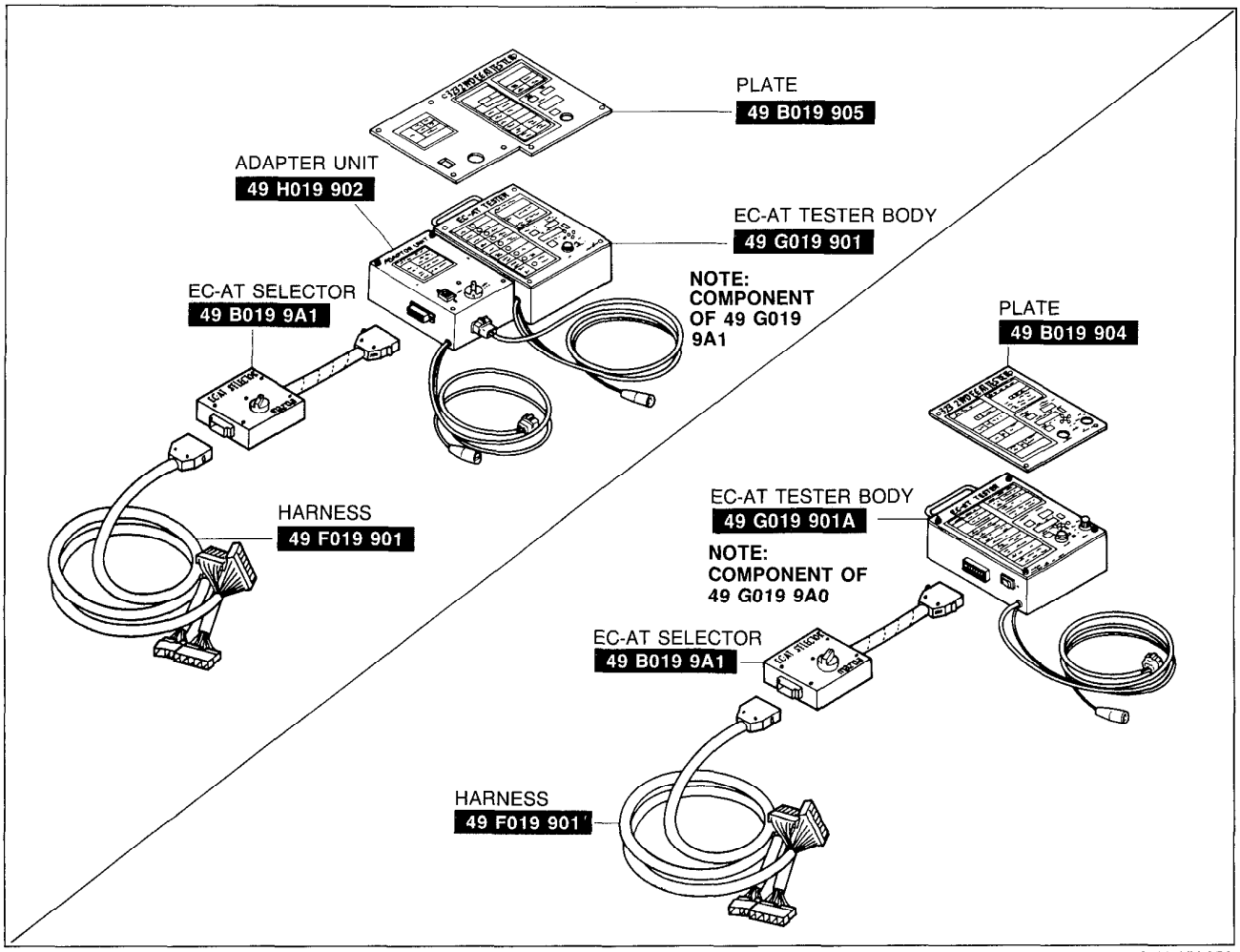

03U0KX-050

Downloaded from www.Manualslib.com manuals search engine

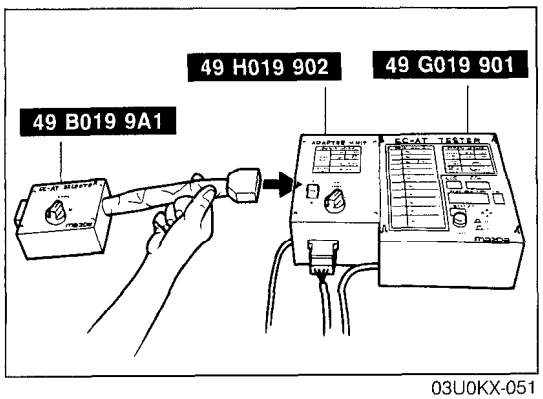

03U0KX-051

Assembly of EC-AT Tester

For EC-AT tester body (49 G019 901) and adapter unit (49 H019 902)

1. Connect the **EC-AT selector** (49 B019 9A1) to the assembled **EC-AT tester body** (49 G019 901) and **adapter unit** (49 H019 902).

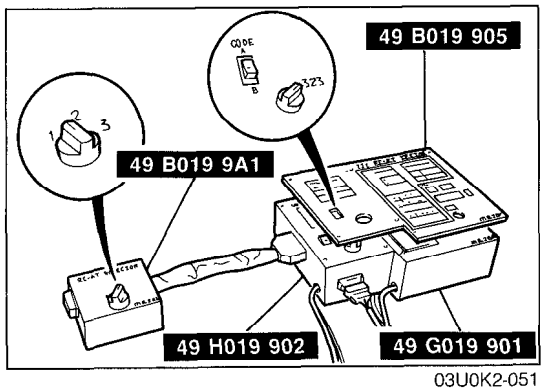

03U0K2-051

2. Place the **panel** (49 B019 905) onto the assembled EC-AT tester.
3. Set the code switch on the adapter unit to position A.
4. Set the vehicle switch on the adapter unit to the 323 position.
5. Set the vehicle switch on the EC-AT selector to position 1.

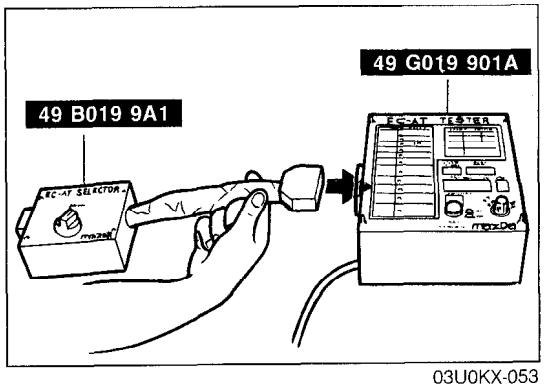

03U0KX-053

For EC-AT tester body (49 G019 901A)

1. Connect the **EC-AT selector** (49 B019 9A1) to the **EC-AT tester body** (49 G019 901A).

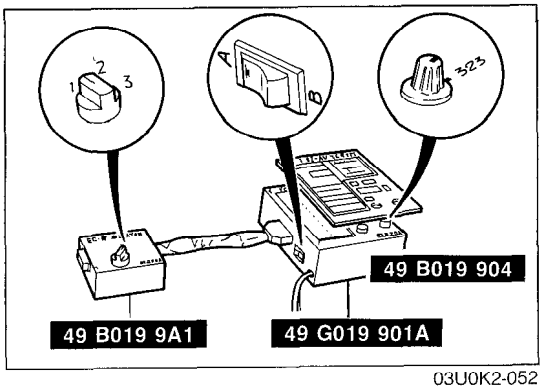

03U0K2-052

2. Place the **panel** (49 B019 904) onto the EC-AT Tester body.
3. Set the code switch on the EC-AT Tester to position A.
4. Set the vehicle switch on the EC-AT Tester to the 323 position.
5. Set the vehicle switch on the EC-AT selector to position 1.

Downloaded from www.Manualslib.com manuals search engine

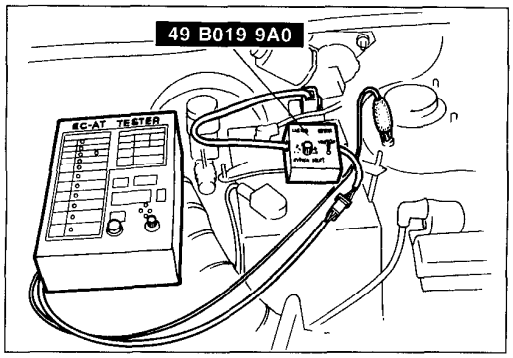

03U0KX-055

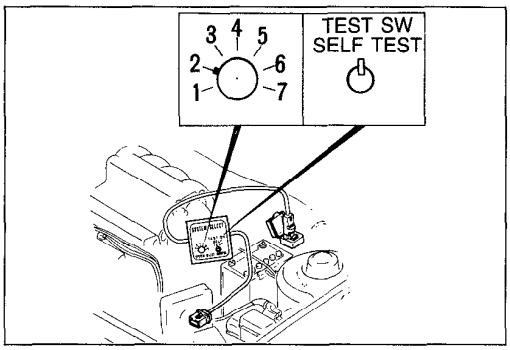

03U0KX-056

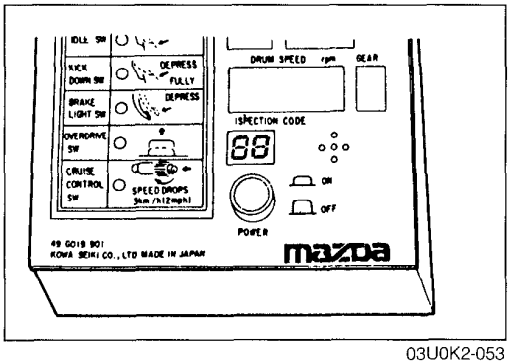

03U0K2-053

MALFUNCTION CODE NUMBER

Inspection procedure

1. Connect the **SST** to the diagnosis connector.
2. Connect the **EC-AT Tester** to the System Selector connector and a ground.
3. Set the **EC-AT Tester** code selector switch to position A.
4. Set the System Selector to position 2 and SELF TEST as shown.
5. Turn the ignition switch ON.
6. Check that **"88"** flashes on the digital display and that the buzzer sounds for **3 seconds**.
7. If **"88"** does not flash, check the diagnosis connector wiring.
8. If **"88"** flashes and the buzzer sounds continuously for more than **20 seconds**, check the wiring to terminal 1C of the EC-AT control unit for a short-circuit. If necessary, replace the EC-AT control unit and repeat from Step 2.
9. Note any code number(s) and check for the cause(s). Repair as necessary. (Refer to page K2–108.)

Note

- **After repairs are made, recheck for code numbers by performing the After-repair Procedure. (Refer to page K2–115.)**

Downloaded from www.Manualslib.com manuals search engine

06→4-SEC. PERIOD→
62→4-SEC. PERIOD→
64→4-SEC. PERIOD→
REPEATS ABOVE

03U0KX-058

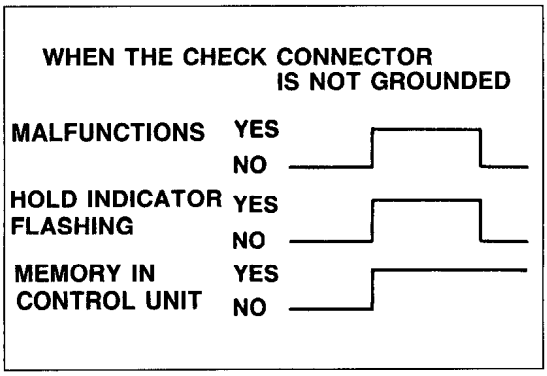

03U0KX-059

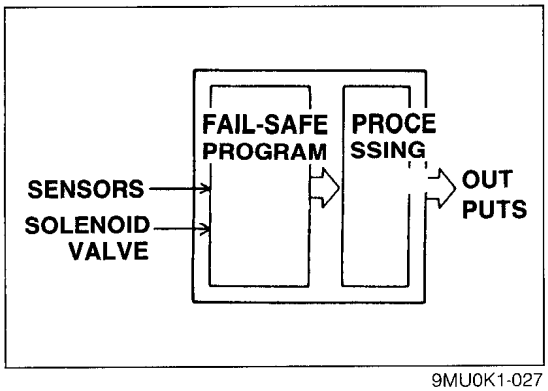

9MU0K1-027

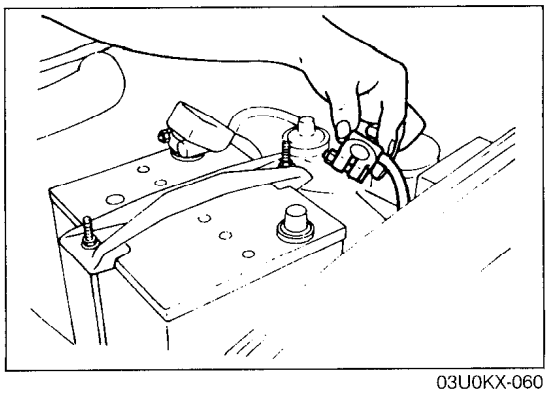

03U0KX-060

GENERAL NOTES

1. If there is more than one malfunction, the code numbers will be indicated in numerical order, lowest number first.

2. The HOLD indicator flashes to indicate the same pattern as the buzzer of the **EC-AT Tester** (49 G019 901A). When the check connector is not grounded, the indicator flashes at a constant frequency until the malfunction recovers. However, the malfunction code is memorized in the EC-AT control unit.

3. The EC-AT control unit has a built-in fail-safe function for the throttle sensor, the speed sensors, and all the solenoids. If a malfunction occurs, the EC-AT control unit will control operation of the remaining components according to a preset fail-safe program.
   The vehicle may still be driven, although driving performance will be slightly affected.

4. The memory of malfunction codes is canceled when the negative battery cable is disconnected for approximately five seconds and the brake pedal is depressed.

Downloaded from www.Manualslib.com manuals search engine

Troubleshooting

If a malfunction code number is shown on the **SST**, check for the cause by using the chart related to the code number shown.

Malfunction code number

CODE No.	LOCATION OF MALFUNCTION	BUZZER	BUZZER (HOLD INDICATOR LAMP FLASH CYCLE)	SELF-DIAGNOSIS	FAIL-SAFE
		49 G019 901 TESTER BODY	49 G019 901A TESTER BODY		
06	Vehicle speed sensor			No input signal from speed sensor while driving at drum speed above 600 rpm in D, S or L ranges	Shifting performed normally
12	Throttle sensor			Open circuit when accelerator depressed (idle switch: OFF) or incorrect adjustment	Throttle opening judged as 4/8 stroke Lockup not provided
55	Pulse generator			No input signal from pulse generator while driving at 40 km/h (25 mph) or higher in D, S or L ranges	Shifting performed in accordance with signals from vehicle speed sensor
60	1-2 shift solenoid valve			Open or short-circuit of transistor within EC-AT control unit or solenoid valve wiring	Solenoid valve(s) performs the shifting with as little interference as possible with driving performance Lockup not provided
61	2-3 shift solenoid valve				
62	3-4 shift solenoid valve				
63	Lockup solenoid valve	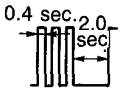	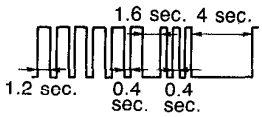		Shifting performed normally Lockup not provided

03U0K2-054

Downloaded from www.Manualslib.com manuals search engine

CODE No.06 VEHICLE SPEED SENSOR			
STEP	INSPECTION		ACTION
1	Are there any poor connections in vehicle speed sensor circuit?	Yes	Repair connector and/or wiring
		No	Go to next step
2	Does EC-AT Tester display vehicle speed? (Refer to page K2–116)	Yes	Vehicle speed sensor OK Cancel memory of code number or replace EC-AT control unit
		No	Go to next step
3	Does vehicle speed sensor operate correctly? (Refer to page *T–67)	Yes	Check for open or short circuit in wiring from speedometer to EC-AT control unit
		No	Replace speed sensor (Refer to page *T–67)

* Refer to 1990 323 Workshop Manual (1195-10-89E).

03U0K2-055

Circuit Diagram

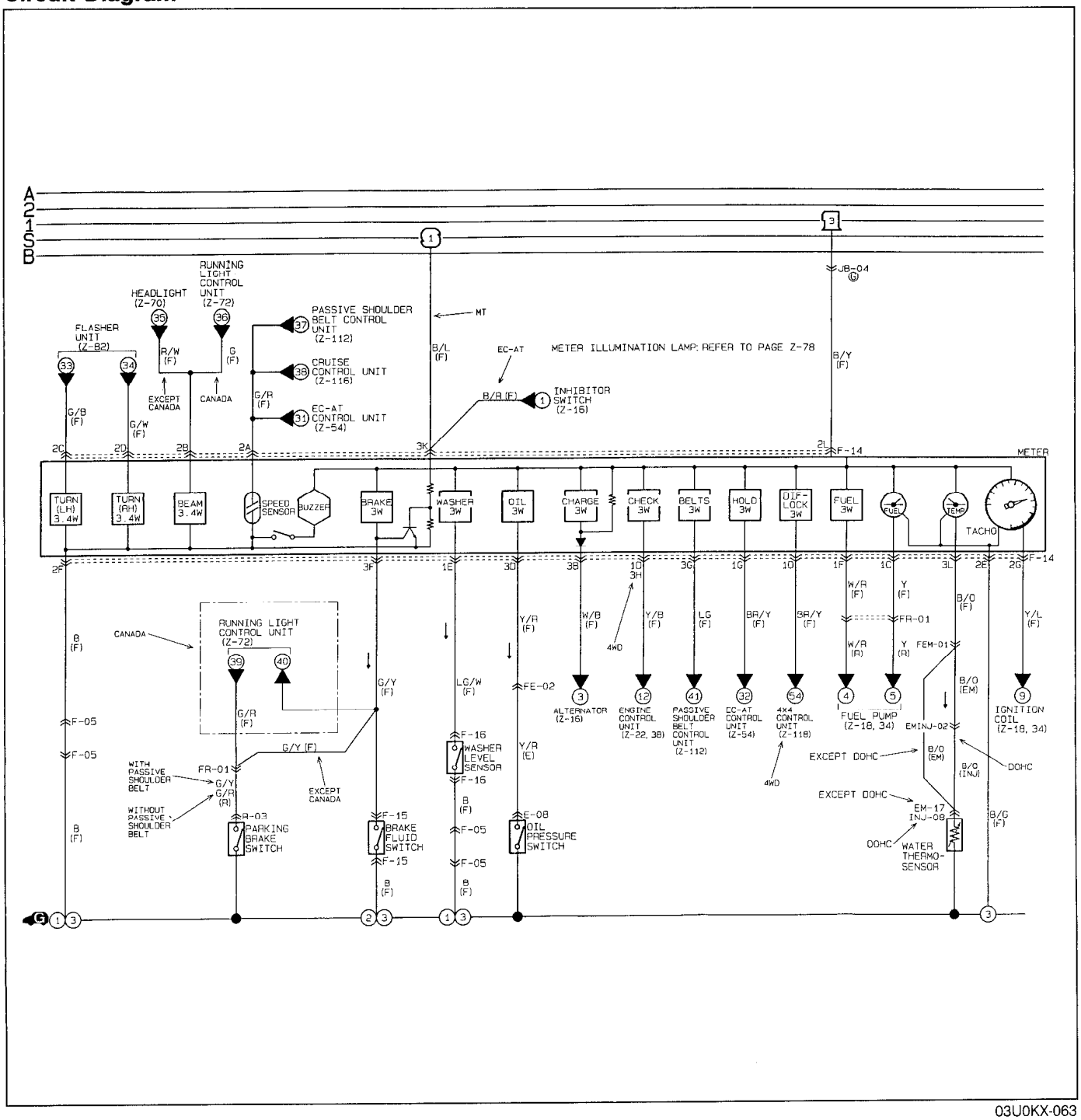

03U0KX-063

Downloaded from www.Manualslib.com manuals search engine

CODE No.12 THROTTLE SENSOR			
STEP	INSPECTION		ACTION
1	Are there any poor connections in throttle sensor circuit?	Yes	Repair connector and/or wiring
		No	Go to next step
2	Does EC-AT Tester display throttle sensor voltage? (Refer to page K2–116)	Yes	Throttle sensor OK Cancel memory of code number or replace EC-AT control unit
		No	Go to next step
3	Is variable resistor of throttle sensor OK? (Refer to page *F–143)	Yes	Check for open or short circuit in wiring from throttle sensor to EC-AT control unit
		No	Replace throttle sensor

* Refer to 1990 323 Workshop Manual (1195-10-89E).

03U0K2-056

Circuit Diagram

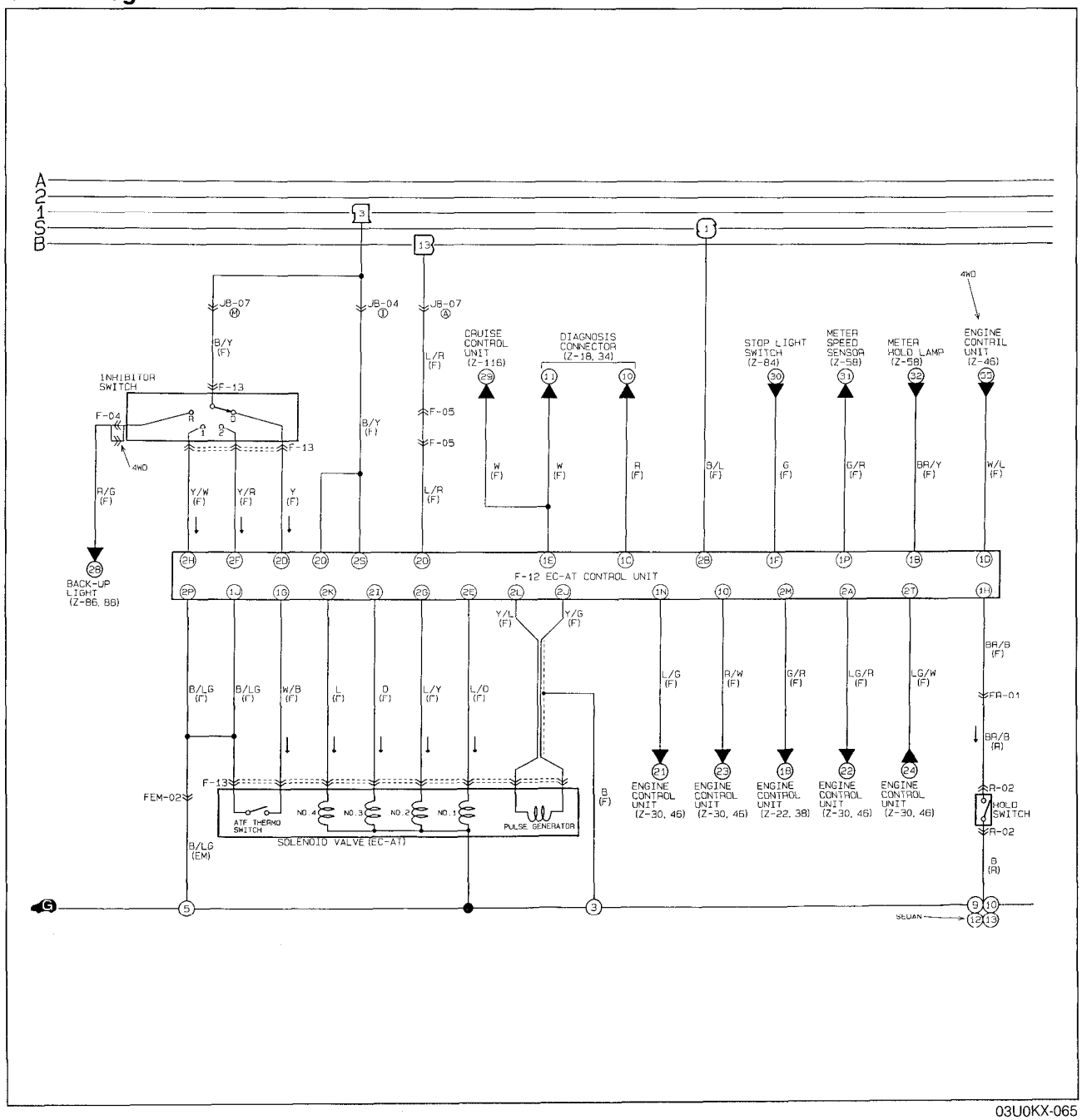

03U0KX-065

Downloaded from www.Manualslib.com manuals search engine

CODE No.55 PULSE GENERATOR			
STEP	INSPECTION		ACTION
1	Are there any poor connections in pulse generator circuit?	Yes	Repair connector and/or wiring
		No	Go to next step
2	Does EC-AT Tester display drum speed?	Yes	Pulse generator OK Cancel memory of code number or replace EC-AT control unit
		No	Go to next step
3	Is resistance of pulse generator OK? **Resistance: 200—400Ω**	Yes	Check for open or short circuit in wiring from pulse generator to EC-AT control unit
		No	Replace pulse generator

03U0K2-057

Circuit Diagram

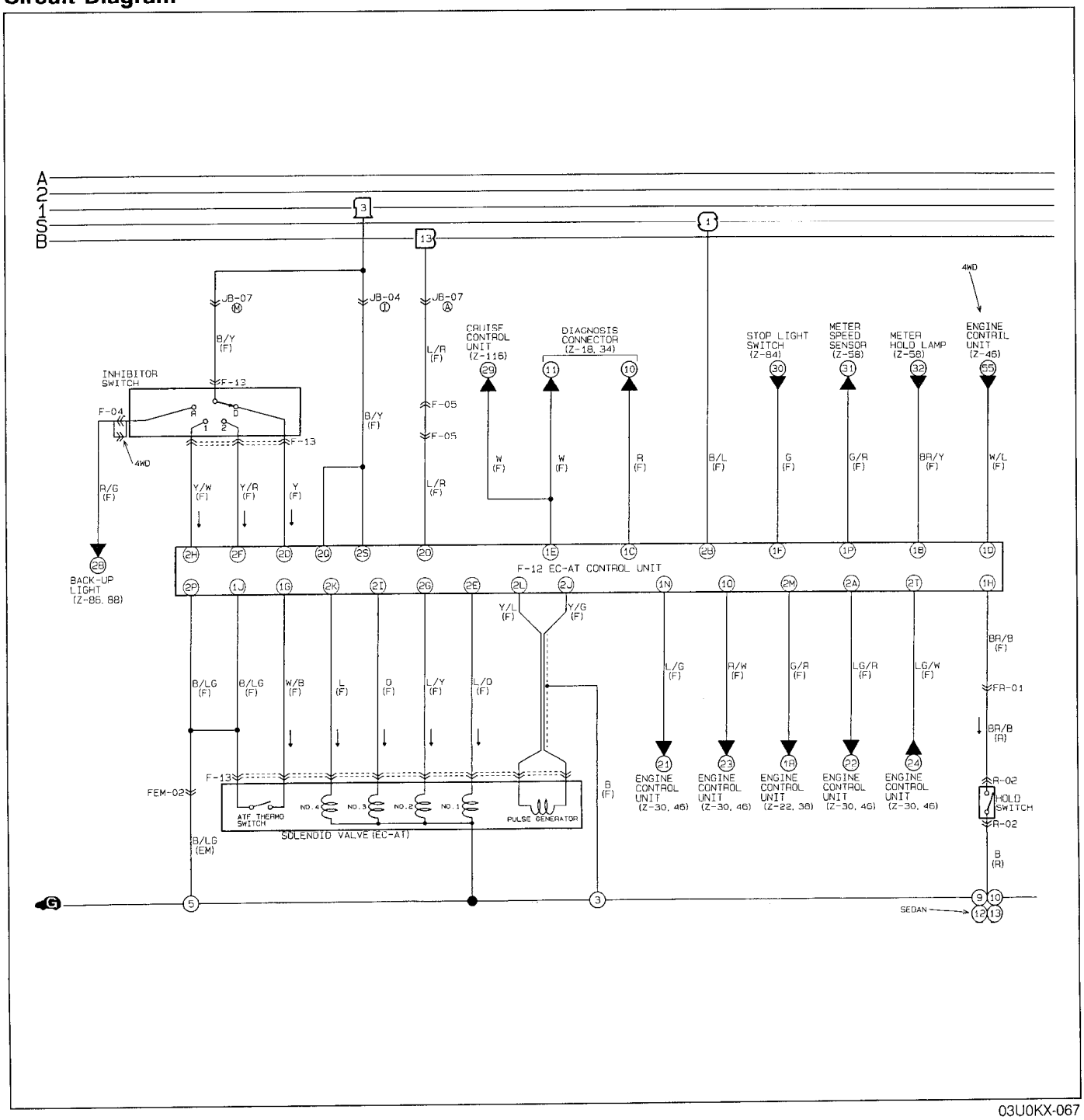

03U0KX-067

Downloaded from www.Manualslib.com manuals search engine

CODE No.60 1-2 SHIFT SOLENOID VALVE

STEP	INSPECTION		ACTION
1	Are there any poor connections in 1-2 shift solenoid valve circuit?	Yes	Repair connector and/or wiring
		No	Go to next step
2	Does EC-AT Tester 1-2 solenoid valve lamp illuminate as shown in solenoid valve operation table? (Refer to page K2–117)	Yes	1-2 shift solenoid valve OK Cancel memory of code number
		No	Go to next step
3	Is there continuity of transistor in EC-AT control unit? Terminal: 2E and 1J or 2P; Continuity: Yes	Yes	Go to next step
		No	Replace EC-AT control unit then continue with next step
4	Is resistance of 1-2 shift solenoid valve OK? Terminal: A and ground; Resistance: 13—27Ω	Yes	Go to Step 6
		No	Go to next step
5	Are there any poor connections at connector in transaxle?	Yes	Repair connector
		No	Go to next step
6	Is there continuity between terminal of EC-AT control unit connector and ground? Terminal: 2E and ground; Continuity: Yes	Yes	Replace EC-AT control unit
		No	Check for open circuit in wiring

03U0K2-058

CODE No.61 2-3 SHIFT SOLENOID VALVE

STEP	INSPECTION		ACTION
1	Are there any poor connections in 2-3 shift solenoid valve circuit?	Yes	Repair connector and/or wiring
		No	Go to next step
2	Does EC-AT Tester 2-3 solenoid valve lamp illuminate as shown in solenoid valve operation table? (Refer to page K2–117)	Yes	2-3 shift solenoid valve OK Cancel memory of code number
		No	Go to next step
3	Is there continuity of transistor in EC-AT control unit? Terminal: 2G and 1J or 2P; Continuity: Yes	Yes	Go to next step
		No	Replace EC-AT control unit and continue with next step
4	Is resistance of 2-3 shift solenoid valve OK? Terminal: B and ground; Resistance: 13—27Ω	Yes	Go to Step 6
		No	Go to next step
5	Are there any poor connections at connector in transaxle?	Yes	Repair connector
		No	Go to next step
6	Is there continuity between terminal of EC-AT control unit connector and ground? Terminal: 2G and ground; Continuity: Yes	Yes	Replace EC-AT control unit
		No	Check for open circuit in wiring

03U0K2-059

Downloaded from www.Manualslib.com manuals search engine

CODE No.62 3-4 SHIFT SOLENOID VALVE			
STEP	INSPECTION		ACTION
1	Are there any poor connections in 3-4 shift solenoid valve circuit?	Yes	Repair connector and/or wiring
		No	Go to next step
2	Does EC-AT Tester 3-4 solenoid valve lamp illuminate as shown in solenoid valve operation table? (Refer to page K2–117)	Yes	3-4 shift solenoid valve OK Cancel memory of code number
		No	Go to next step
3	Is there continuity of transistor in EC-AT control unit? Terminal: 2I and 1J or 2P; Continuity: Yes	Yes	Go to next step
		No	Replace EC-AT control unit and continue with next step
4	Is resistance of 3-4 shift solenoid valve OK? Terminal: D and ground; Resistance: 13–27Ω	Yes	Go to Step 6
		No	Go to next step
5	Are there any poor connections at connector in transaxle?	Yes	Repair connector
		No	Go to next step
6	Is there continuity between terminal of EC-AT control unit connector and ground? Terminal: 2I and ground; Continuity: Yes	Yes	Replace EC-AT control unit
		No	Check for open circuit in wiring

03U0K2-060

CODE No.63 LOCKUP SOLENOID VALVE			
STEP	INSPECTION		ACTION
1	Are there any poor connections in lockup solenoid valve circuit?	Yes	Repair connector and/or wiring
		No	Go to next step
2	Does EC-AT Tester lockup solenoid valve lamp illuminate as shown in solenoid valve operation table? (Refer to page K2–117)	Yes	Lockup solenoid valve OK Cancel memory of code number
		No	Go to next step
3	Is there continuity of transistor in EC-AT control unit? Terminal: 2K and 1J or 2P; Continuity: Yes	Yes	Go to next step
		No	Replace EC-AT control unit then continue with next step
4	Is resistance of lockup solenoid valve OK? Terminal: E and ground; Resistance: 13–27Ω	Yes	Go to Step 6
		No	Go to next step
5	Are there any poor connections at connector in transaxle?	Yes	Repair connector
		No	Go to next step
6	Is there continuity between terminal of EC-AT control unit connector and ground? Terminal: 2K and ground; Continuity: Yes	Yes	Replace EC-AT control unit
		No	Check for open circuit in wiring

03U0K2-061

Downloaded from www.Manualslib.com manuals search engine

Circuit Diagram

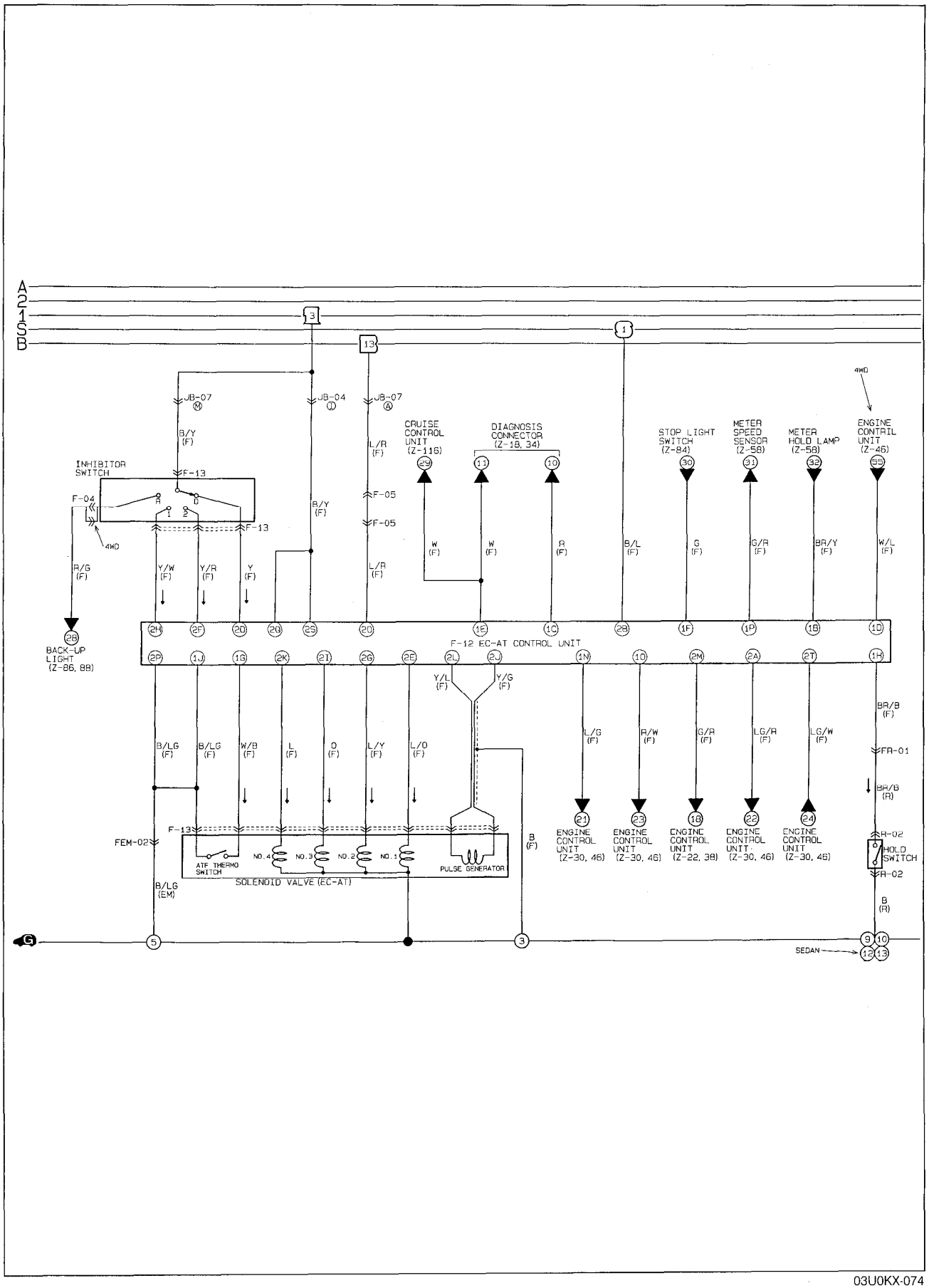

03U0KX-074

Downloaded from www.Manualslib.com manuals search engine

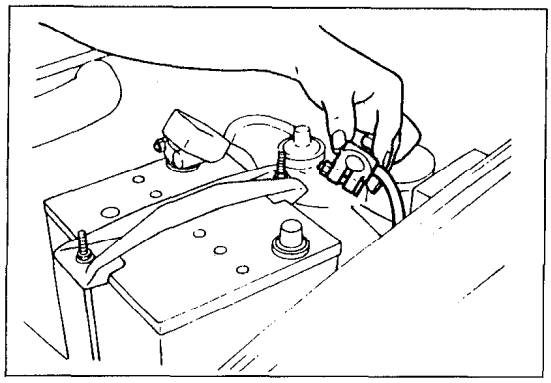

03U0KX-075

After-repair Procedure

1. Cancel the memory of malfunctions by disconnecting the negative battery cable for at least **five seconds** and depressing the brake pedal. Reconnect the battery cable.
2. Remove the **EC-AT Tester** if it is connected.

DRIVE AT 50 km/h (31 mph)

|

KICKDOWN

|

STOP THE VEHICLE

79G07C-069

3. Drive the vehicle at 50 km/h (31 mph), then depress the accelerator pedal fully to activate kickdown. Stop the vehicle gradually.

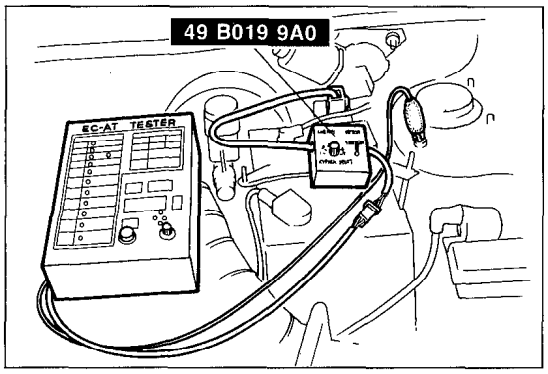

03U0KX-076

4. Connect the **SSTs** to the diagnosis connector as shown.
5. Turn the ignition switch ON.
6. Verify that no code numbers are displayed.

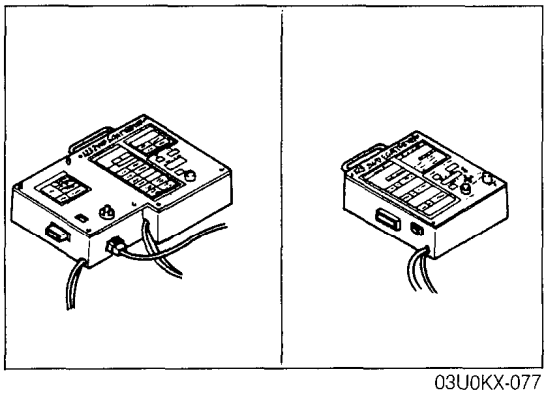

03U0KX-077

ELECTRICAL SIGNAL INSPECTION

In this step, the input and output signals are checked with the EC-AT Tester.
The tester checks for proper operation of the various switches and sensors in the EC-AT system. It also checks the EC-AT control unit for output of the various control signals.

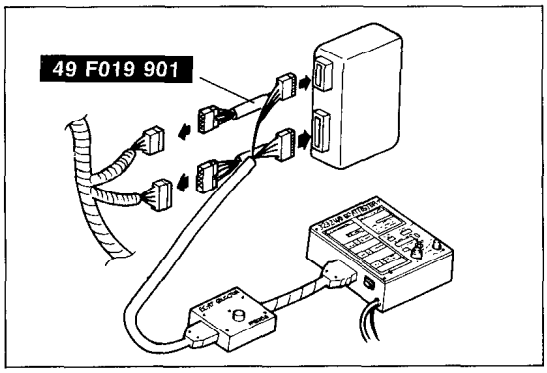

03U0K2-062

INSPECTION PROCEDURE

1. Assemble the EC-AT Tester. (Refer to page K2–104.)
2. Disconnect the connectors from the EC-AT control unit.
3. Connect the harness between the control unit and the connectors.
4. Turn the vehicle ignition switch and main switch of the EC-AT Tester ON.
5. Verify indication of the respective light or digital display in each condition, referring to the indication table on the following page.

Downloaded from www.Manualslib.com manuals search engine

Indication Table of Light and Digital Display

Item		Specified indication	Test condition	If incorrect, possible cause
Input (Light)				
INHIBITOR SW	P,N	ON	P or N ranges	Inhibitor or wiring
		OFF	Other ranges	
	D	ON	D range	
		OFF	Other ranges	
	S	ON	S range	
		OFF	Other ranges	
	L	ON	L range	
		OFF	Other ranges	
WATER THERMO SW		ON	Water temperature above 72°C (162°F)	EC-AT control unit, engine control unit, or wiring
		OFF	Water temperature below 72°C (162°F)	
ATF THERMOSENSOR		ON	ATF temperature above 142—148°C (288—298°F)	ATF thermoswitch or wiring
		OFF	ATF temperature below 138°C (280°F)	
HOLD SW		ON	Hold switch released	Hold switch or wiring
		OFF	Hold switch depressed	
IDLE SW		ON	Throttle valve fully closed	Idle switch or wiring
		OFF	Throttle valve open	
STOPLIGHT SW		ON	Brake pedal depressed	Stoplight switch or wiring
		OFF	Brake pedal released	
Input (Digital display)				
THROTTLE SENSOR		EC-AT control unit terminal voltage	Constant	Throttle sensor, idle switch, or wiring
VEHICLE SPEED*		Vehicle speed calculated from speed sensor signal	Constant	Vehicle speed sensor, speedometer cable, or wiring
DRUM SPEED*		Drum speed	Constant	Pulse generator or wiring

03U0K2-063

Note
*** Item must be checked with engine running or while driving.**

Downloaded from www.Manualslib.com manuals search engine

Item	Specified indication	Test condition	If incorrect possible cause
Output (Light)			
1-2 SOLENOID VALVE*1	ON	Refer to Solenoid valve operation table (Refer to page K2–118)	EC-AT control unit, 1-2 shift solenoid, or wiring
	OFF		
2-3 SOLENOID VALVE*1	ON		EC-AT control unit, 2-3 shift solenoid, or wiring
	OFF		
3-4 SOLENOID VALVE*1	ON		EC-AT control unit, 3-4 shift solenoid, or wiring
	OFF		
LOCKUP SOLENOID VALVE*1	ON	Lockup condition	EC-AT control unit, lock-up solenoid, or wiring
	OFF	Non-Lockup condition	
SHIFT*2	Not used		
HOLD INDICATOR	ON	Hold mode	EC-AT control unit, hold switch, or wiring
	OFF	Normal mode	

03U0K2-064

Item	Specified indication	Test condition
Output (Digital display)		
GEAR*1	1	1st
	2	2nd
	3	3rd
	4	Overdrive (OD)

03U0K2-065

Note
*1 **Item must be checked with the engine running or while driving.**
*2 **2WD only.**

Downloaded from www.Manualslib.com manuals search engine

Comprehensive usage

The EC-AT Tester is used to inspect for slippage of friction elements, shift points, and shift sequence of the transaxle.
The following inspection must be done while driving the vehicle.

03U0KX-082

Solenoid valve operation table

Range		Gear		Specified light indication and Solenoid valve operation			
				1-2	2-3	3-4	Lockup
P		—			ON	ON	
R		Reverse		ON			
N		—	Below approx. 4 km/h (2.5 mph)			ON	
			Above approx. 5 km/h (3 mph)	ON			
D		1st			ON	ON	
		2nd		ON	ON	ON	
		3rd	Below approx. 5 km/h (3.1 mph) at operating temperature				
			Above approx. 5 km/h (3.1 mph) or cold engine	ON			
		OD	Lockup OFF	ON		ON	
			Lockup ON	ON		ON	ON
S		1st			ON	ON	
		2nd		ON	ON	ON	
		3rd	Below approx. 5 km/h (3.1 mph) at operating temperature				
			Above approx. 5 km/h (3.1 mph) or cold engine	ON			
			Lockup OFF		ON		
			Lockup ON		ON		ON
		OD		ON		ON	
L		1st			ON	ON	
		2nd	Below approx. 110 km/h (68 mph)	ON	ON		
			Above approx. 110 km/h (68 mph)	ON			
HOLD	D	1st			ON	ON	
		2nd		ON	ON	ON	
		3rd	Below approx. 5 km/h (3.1 mph) at operating temperature				
			Above approx. 5 km/h (3.1 mph) or cold engine	ON			
			Lockup ON	ON			ON
		OD		ON		ON	
	S	2nd		ON	ON		
		3rd	Below approx. 5 km/h (3.1 mph) at operating temperature				
			Above approx. 5 km/h (3.1 mph) or cold engine	ON			
		OD		ON		ON	
	L	1st			ON		
		2nd	Below approx. 110 km/h (68 mph)	ON	ON		
			Above approx. 110 km/h (68 mph)	ON			

03U0K2-066

Downloaded from www.Manualslib.com manuals search engine

MECHANICAL SYSTEM TEST

PREPARATION
SST

49 0378 400A Gauge set, oil pressure	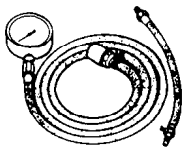	For oil pressure test	49 B019 901 Gauge, oil pressure	For oil pressure test

03U0K2-067

STALL TEST

This test is performed to determine if there is slippage of the friction elements or malfunction of the hydraulic components.

Preparation

1. Check, and correct as necessary, the engine coolant, engine oil, and ATF levels before testing.
2. Warm the engine thoroughly to raise the ATF temperature to operating level **(60—70°C, 140—158°F)**.
3. Engage the parking brake and use wheel chocks at the front and rear of the wheels.

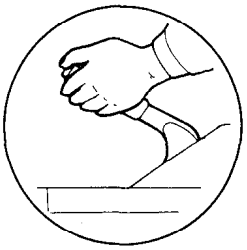

ENGAGE PARKING BRAKE

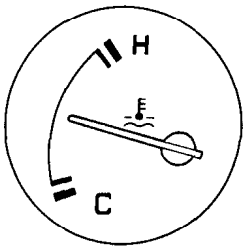

WARM UP ENGINE

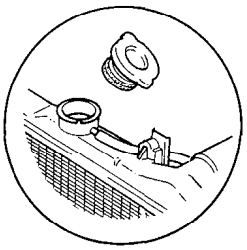

COOLANT LEVEL

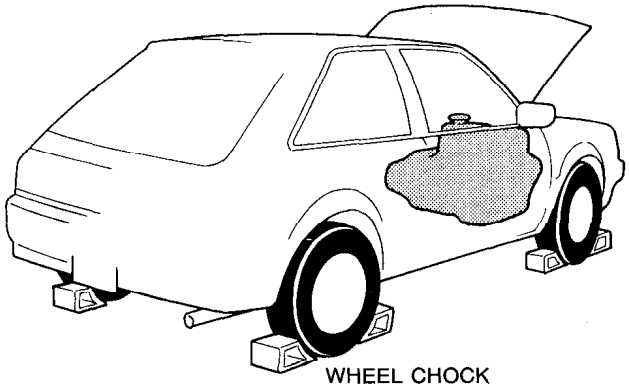

WHEEL CHOCK

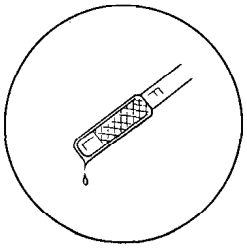

ENGINE OIL LEVEL

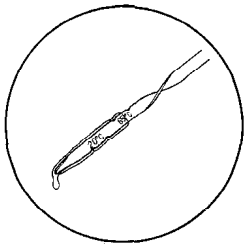

ATF LEVEL

03U0KX-085

Downloaded from www.Manualslib.com manuals search engine

Procedure

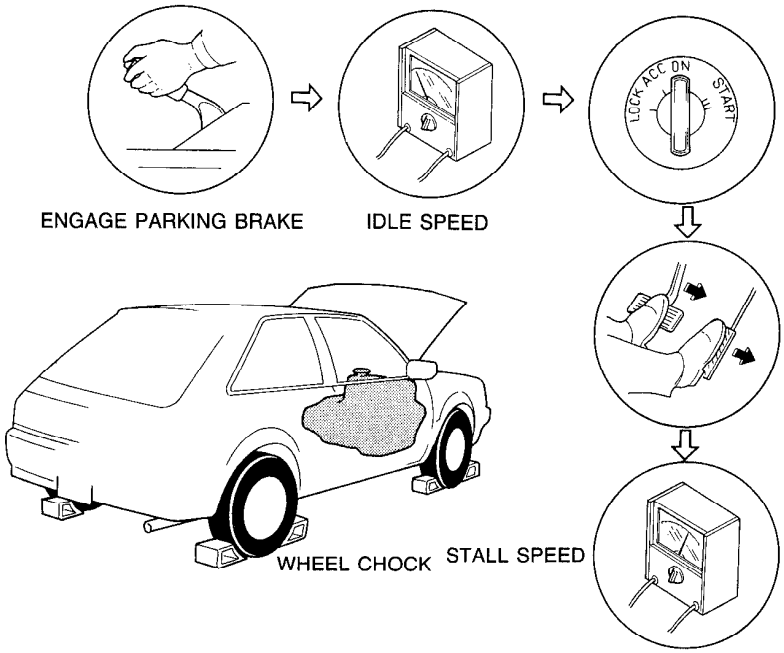

03U0KX-086

1. Connect a tachometer to the engine.
2. Start the engine and check the idle speed in P range. (Refer to Section F.)

   Idle speed: 750 ± 50 rpm (with parking brake applied)

3. Shift the selector lever to R range.

   Caution
   - **Steps 4 and 5 must be performed within 5 seconds to prevent possible transaxle damage.**

4. Firmly depress the foot brake with the left foot, and gently depress the accelerator pedal with the right.
5. When the engine speed no longer increases, quickly read the engine speed and release the accelerator.

   Caution
   - **Idling for at least one minute to cool the ATF and to prevent deterioration of the fluid.**

6. Move the selector lever to N range and let the engine idle for at least one minute.

Downloaded from www.Manualslib.com manuals search engine

Caution
- **Be sure to allow sufficient cooling time between each stall test.**

7. Perform stall tests for the remaining ranges in the same manner.
   (1) D range
   (2) S range
   (3) L range

Engine stall speed: 2,550—2,650 rpm

Note
- **The stall test can be performed with the EC-AT Tester in place of a tachometer.**

Drum stall speed indication: 0 rpm

03U0K2-068

Evaluation of Stall Test

Condition		Possible cause	
Above specification	In all ranges	Insufficient line pressure	Worn oil pump
			Oil leakage from oil pump, control valve, and/or transaxle case
			Stuck pressure regulator valve
	In forward ranges	Forward clutch slipping One-way clutch 1 slipping	
	In D range	One-way clutch 2 slipping	
	In S (Hold) and L (Hold) ranges	Coasting clutch slipping	
	In D (Hold) and S (Hold) ranges	2-4 brake band slipping	
	In R, L and L (Hold) ranges	Low and reverse brake slipping	
	In R range	Low and reverse brake slipping Reverse clutch slipping Perform road test to determine whether problem is low and reverse brake or reverse clutch a) Engine breaking felt in L range 1st ...Reverse clutch b) Engine breaking not felt in L range 1st ...Low and reverse brake	
Within specification		All shift control elements within transaxle are functioning normally	
Below specification		Engine out of tune	
		One-way clutch slipping within torque converter	

03U0KX-088

Downloaded from www.Manualslib.com manuals search engine

TIME LAG TEST

If the selector lever is shifted while the engine is idling, there will be a certain time lapse, or time lag, before shock is felt. This step measures this time lag for checking conditions of the N-D, 1-2, and N-R accumulators, forward and one-way clutches, 2-4 brake band, and low and reverse brake.

Preparation

Perform the preparation procedure outlined in STALL TEST. (Refer to page K2–119.)

Procedure

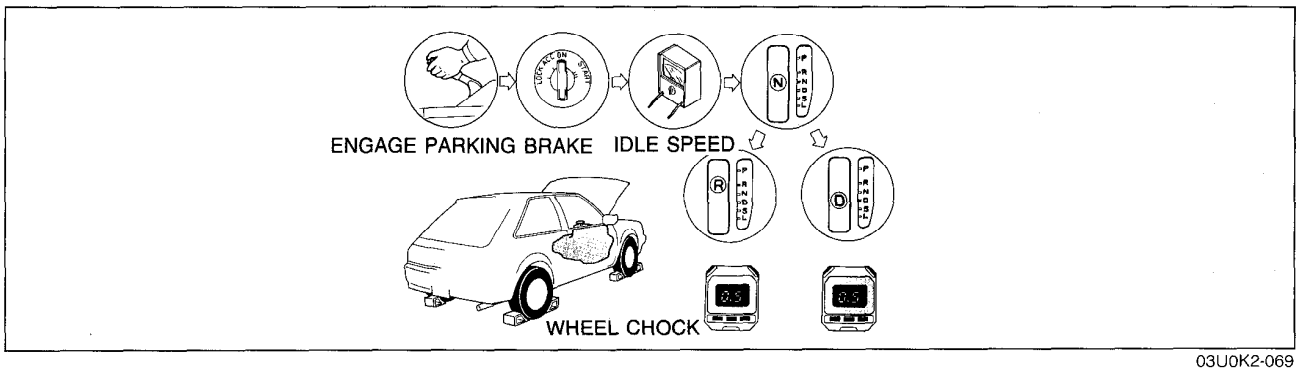

03U0K2-069

1. Start the engine and check the idle speed in P range. (Refer to Section F.)

   Idle speed: 750 ± 50 rpm (with parking brake applied)

2. Shift from N range to D range.
3. Use a stopwatch to measure the time it takes from shifting until shock is felt.

   Caution
   - **Idling for at least one minute is to cool the ATF and prevent deterioration of the fluid.**

4. Shift the selector to N range and run the engine at idle speed for at least one minute.

   Note
   - **Make three measurements for each test and take the average value.**

5. Perform the test for the following shifts in the same manner.
   (1) N→D range
   (2) N→D range (Hold mode)
   (3) N→R range

   Time lag: N→D range ..... 0.5—1.0 second
   N→R range ..... 0.6—1.0 second

Evaluation of Time Lag Test

Condition		Possible Cause
N → D shift	More than specification	Insufficient line pressure Forward clutch slipping One-way clutch 1 slipping One-way clutch 2 slipping
	Less than specification	N-D accumulator not operating properly Excessive line pressure
N → D (Hold) shift	More than specification	Insufficient line pressure Forward clutch slipping 2-4 brake band slipping One-way clutch 1 slipping
	Less than specification	1-2 accumulator not operating properly Excessive line pressure
N → R shift	More than specification	Insufficient line pressure Low and reverse brake slipping Revese clutch slipping
	Less than specification	N-R accumulator not operating properly Excessive line pressure

03U0KX-090

Downloaded from www.Manualslib.com manuals search engine

LINE PRESSURE TEST

This test measures line pressures as a means of checking the hydraulic components and inspecting for oil leakage.

Preparation

1. Perform the preparation procedure outlined in STALL TEST. (Refer to page K2–119.)
2. Connect a tachometer to the engine.
3. Connect the **SST** to the line pressure inspection port (square head plug L).

Procedure

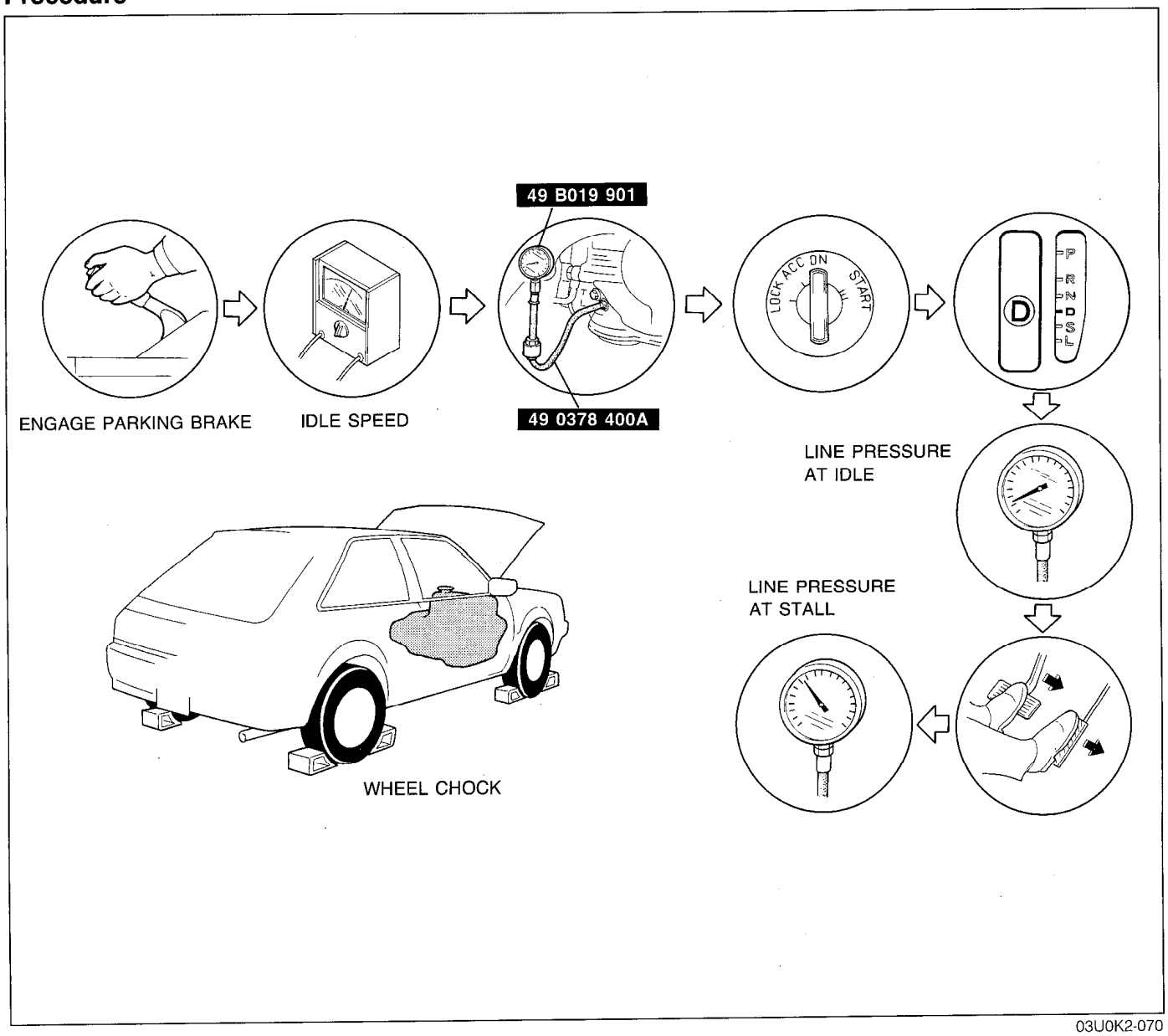

03U0K2-070

1. Start the engine and check the idle speed in P range. (Refer to Section F.)

   Idle speed: 750 ± 50 rpm (with parking brake applied)

2. Shift the selector lever to D range and read the line pressure at idle.

   Caution
   - **Step 3 and 4 must be performed within 5 seconds to prevent possible transaxle damage.**

3. Depress the brake pedal firmly with the left foot and gradually depress the accelerator pedal with the right foot.
4. Read the line pressure as soon as the engine speed becomes constant, then release the accelerator pedal.

Downloaded from www.Manualslib.com manuals search engine

Caution
- **Idling for at least one minute is to cool the ATF and to prevent deterioration of the fluid.**

5. Shift the selector lever to N range and run the engine at idle for at least one minute.
6. Read the line pressure at idle and at the engine stall speed for each range in the same manner.

Specified line pressure:

Range	Line pressure kPa (kg/cm^2, psi)	
	Idle	Stall
D, S, L	353—432 (3.6—4.4, 51—63)	873—1,040 (8.9—10.6, 127—151)
R	598—942 (6.1—9.6, 87—137)	1,668—2,011 (17.0—20.5, 242—292)

03U0K2-071

7. Install a new square head plug in the inspection port.

Tightening torque: 4.9—9.8 N·m (50—100 cm-kg, 43—87 in-lb)

Evaluation of Line Pressure Test

Line pressure	Possible location of problem
Low pressure in every position	Worn oil pump Fluid leaking from oil pump, control valve body, or transaxle case Pressure regulator valve sticking Throttle valve sticking Throttle modulator valve sticking Throttle cable misadjusted
Low pressure in D and S only	Fluid leaking from hydraulic circuit of forward clutch
Low pressure in R only	Fluid leaking from hydraulic circuit of low and reverse brake
Higher than specification	Throttle valve sticking Throttle modulator valve sticking Pressure regulator valve sticking Throttle cable misadjustment

03U0KX-093

Downloaded from www.Manualslib.com manuals search engine

THROTTLE PRESSURE TEST

This test measures throttle pressures as a means of checking the hydraulic components and inspecting for oil leakage.

Preparation

1. Perform the preparation procedure outlined in STALL TEST. (Refer to page K2–119.)
2. Connect a tachometer to the engine.
3. Connect the **SST** to the line pressure inspection port (square head plug T).

Procedure

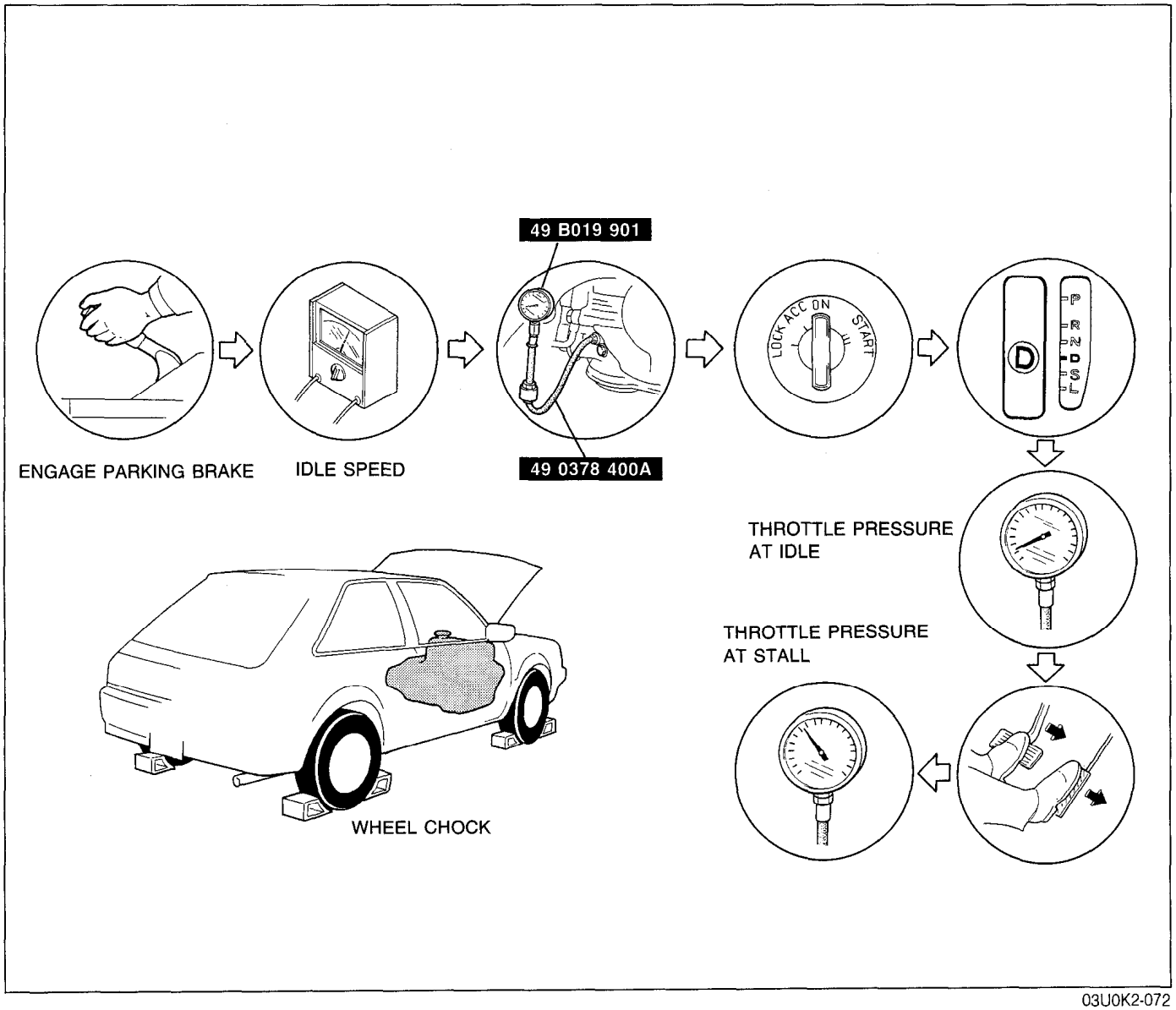

03U0K2-072

1. Start the engine and check the idle speed in P range. (Refer to Section F.)

   Idle speed: 750 ± 50 rpm (with parking brake applied)

2. Shift the selector lever to D range and read the throttle pressure at idle.

   Caution
   - **Steps 3 and 4 must be performed within 5 seconds to prevent possible transaxle damage.**

3. Depress the brake pedal firmly with the left foot and gradually depress the accelerator pedal with the right foot.
4. Read the throttle pressure as soon as the engine speed becomes constant, then release the accelerator pedal.

Downloaded from www.Manualslib.com manuals search engine

Caution
- **Idling for at least one minute is to cool the ATF and to prevent deterioration of the fluid.**

5. Shift the selector lever to N range and run the engine at idle for at least one minute.

Specified throttle pressure:

Range	Throttle pressure kPa (kg/cm^2, psi)	
	Idle	Stall
D	39—88 (0.4—0.9, 6—13)	471—589 (4.8—6.0, 68—85)

03U0K2-073

6. Install a new square head plug in the inspection port.

Tightening torque: 4.9—9.8 N·m (50—100 cm-kg, 43—87 in-lb)

Evaluation of Throttle Pressure Test

Throttle pressure	Possible location of problem
Not within specification	Throttle valve sticking Pressure regulator valve sticking Throttle cable misadjuted

03U0KX-096

Downloaded from www.Manualslib.com manuals search engine

ROAD TEST

Caution
- **Perform the test at normal ATF operating temperature (60—70°C, 140—158°F).**

This step is performed to inspect for problems in the various gear ranges. If these tests show any problems, refer to the electronic system component or mechanical sections to adjust or replace.

D-RANGE TEST

Shift Point, Shift Pattern, and Shift Shock

1. Shift the selector lever to D range.

Note
- **Throttle sensor voltage of the EC-AT Tester represents the throttle valve opening.**

2. Accelerate the vehicle with half- and full-throttle opening.
3. Check that 1-2, 2-3, and 3-OD upshifts, downshifts, and lockup are obtained. The shift points must be as shown in the D range shift diagram.

Note
- **Drum speed (rpm) of the EC-AT Tester represents the shift point.**
- **The vehicle's indicated speed as shown by the vehicle speedometer may not be accurate when the vehicle is on a chassis roller. Therefore, verify the shift points using only the drum speed as shown by the EC-AT Tester.**
- **There is no lockup when the coolant temperature is below 72°C (162°F).**
- **There is no lockup when the brake pedal is depressed.**

4. Check the upshifts for shift shock or slippage in the same manner.
5. While driving in OD (below 148 km/h, 92 mph), shift the selector lever to S range and check that OD-3 downshift immediately occurs.

D-range shift diagram

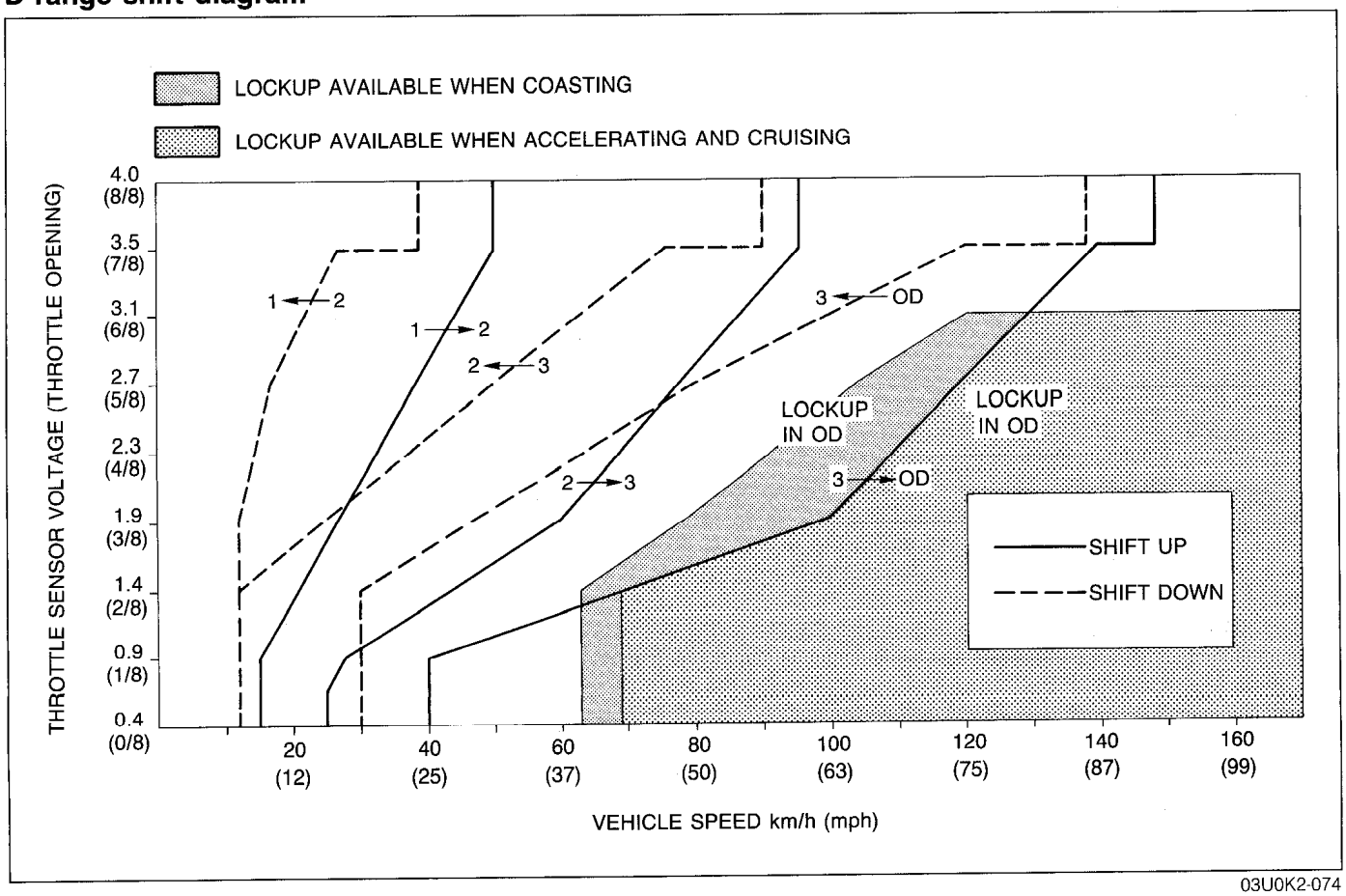

03U0K2-074

Downloaded from www.Manualslib.com manuals search engine

6. Select the Hold mode.
7. Accelerate the vehicle and verify that the 1-2 and 2-3 upshifts 3-1, and lockup downshifts are obtained. The shift points are as shown in the D range (Hold) shift diagram.

D-range (Hold) shift diagram

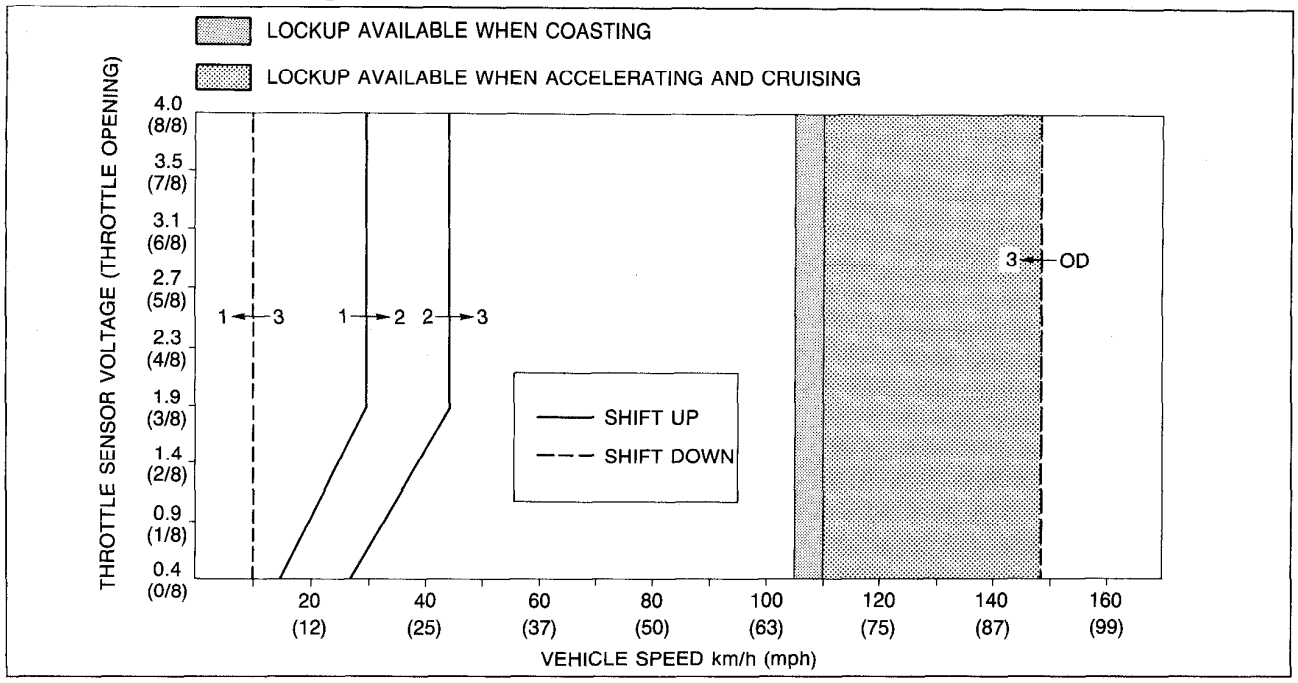

03U0K2-075

Evaluation

Condition	Possible Cause
No 1-2 up- or downshift	Stuck 1-2 shift solenoid valve Stuck 1-2 shift valve
No 2-3 up- or downshift	Stuck 2-3 shift solenoid valve Stuck 2-3 shift valve
No 3-OD up- or downshift	Stuck 3-4 shift solenoid valve Stuck 3-4 shift valve
No lockup shift	Stuck lockup control solenoid valve Stuck lockup control valve
Incorrect shift point	Misadjusted throttle sensor Stuck shift valves
Excessive shift shock or slippage	Stuck accumulators Stuck or no one-way check orifice Worn clutches, brakes, or one-way clutch
No engine braking effect	Worn clutches or brakes

03U0KX-103

Noise and Vibration

Note

- **Abnormal noise and vibration can also be caused by the torque converter, driveshaft, or differential. Therefore, check for the cause with extreme care.**

Drive the vehicle in OD (lockup), OD (no lockup), and 3rd (Hold) and check for abnormal noise or vibration.

Kickdown

Drive the vehicle in OD, 3rd, and 2nd gears and check that kickdown occurs for OD→3, OD→2, OD→1, 3→2, 3→1, 2→1, and that the shift points are as shown in the shift diagram.

03U0KX-104

Downloaded from www.Manualslib.com manuals search engine

S-RANGE TEST

Shift Pattern

1. Shift the selector lever to S range.
2. Accelerate the vehicle and verify that the 1-2 and 2-3 upshifts, downshifts, and lockup are obtained. The shift points must be as shown in the S range shift diagram.

S-range shift diagram

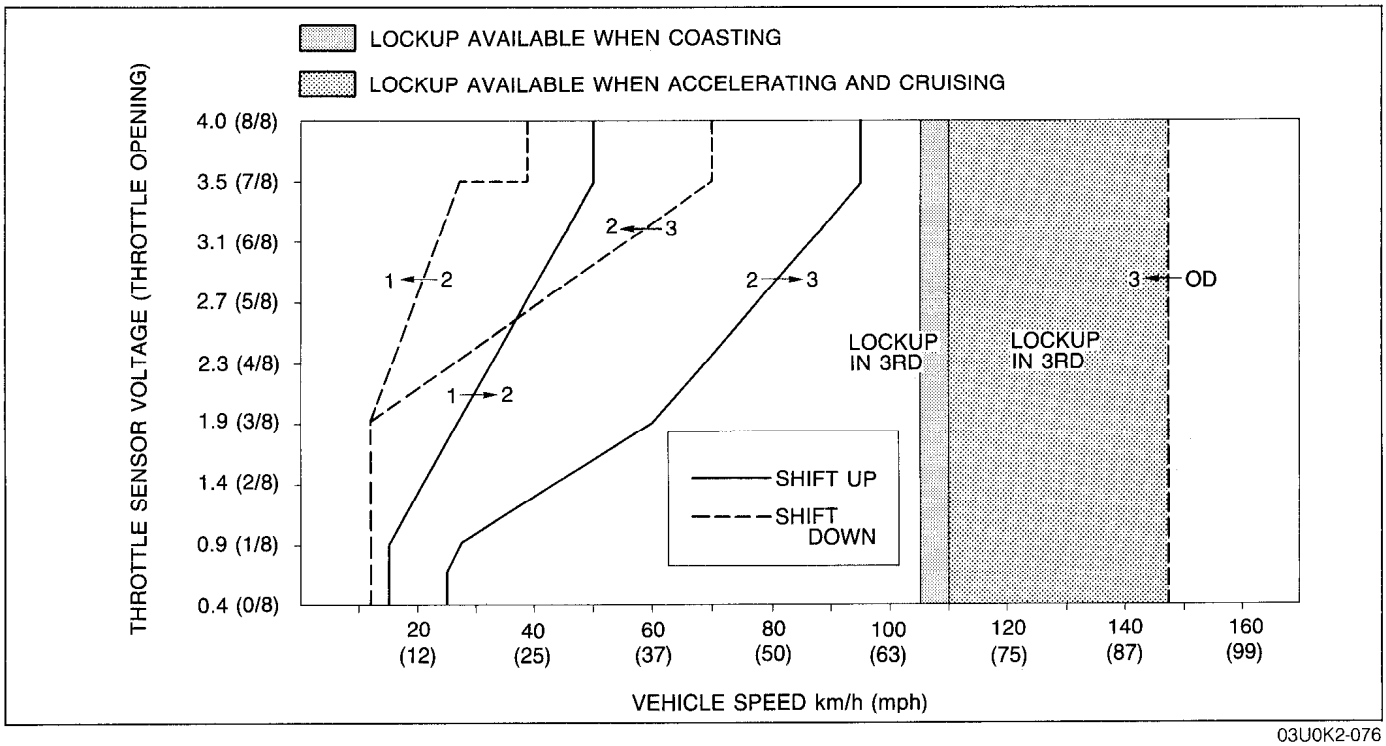

03U0K2-076

3. While driving in S range and 3rd gear, select the Hold mode and verify that 3rd gear is held until the 3-2 downshift point as shown in the S range (Hold) shift diagram is achieved.
4. Accelerate the vehicle in S range (Hold) and verify that 2nd gear is held.

S-range (Hold) shift diagram

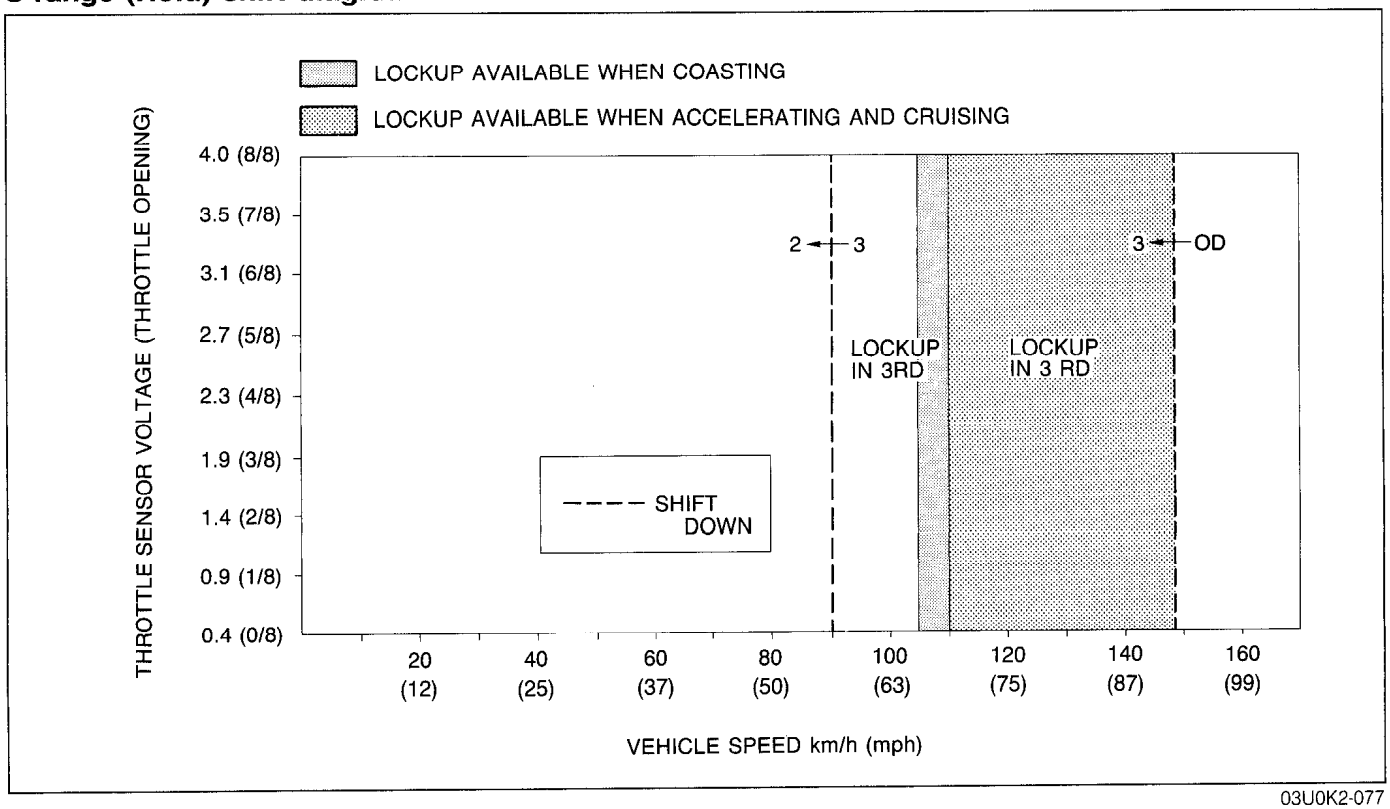

03U0K2-077

Downloaded from www.Manualslib.com manuals search engine

Noise and vibration

Note

- **Abnormal noise and vibration can also be caused by the torque converter, drive shaft or differential. Therefore, check for the cause with extreme care.**

Drive the vehicle in 2nd gear (Hold mode) and check for abnormal noise or vibration.

03U0K2-078

L-RANGE TEST

Shift Pattern

1. Shift the selector lever to L range.
2. Accelerate the vehicle and verify that the 1-2 upshifts and downshifts are obtained and that no 3rd gear, OD, or lockup is obtained.
3. Check the upshifts for shift shock or slippage in the same manner.
4. Decelerate the vehicle and verify that engine braking effect is felt in 2nd gear.

L-range shift diagram

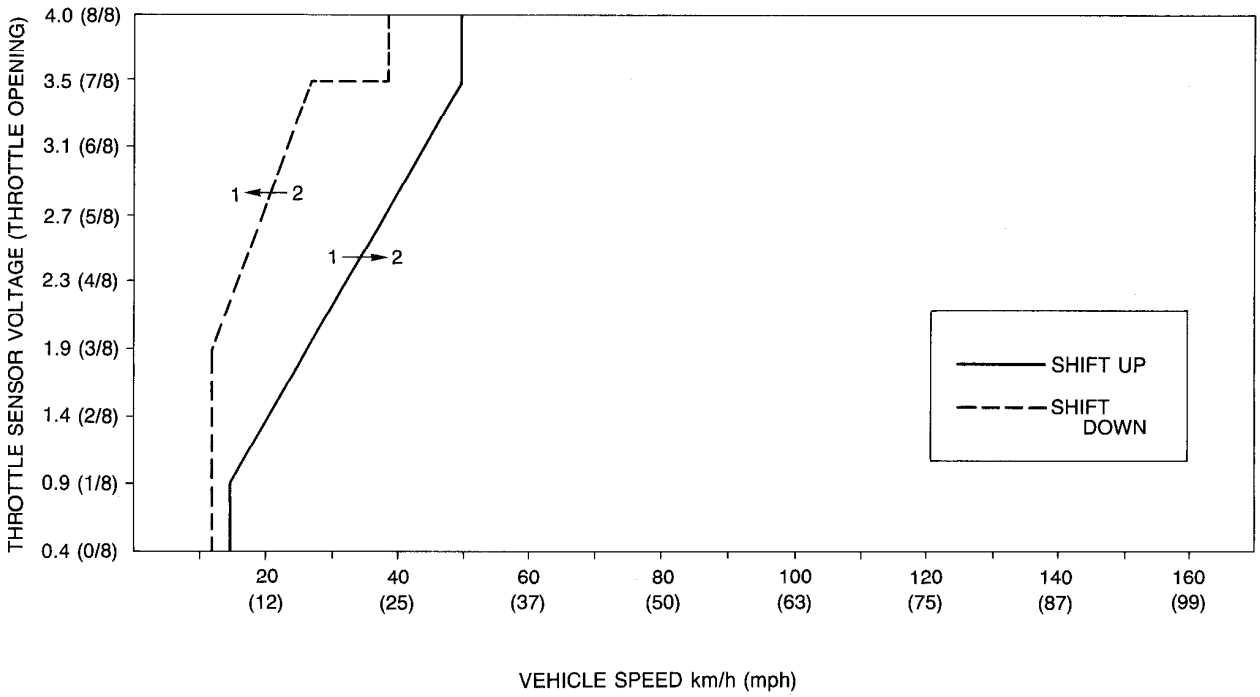

03U0K2-079

Downloaded from www.Manualslib.com manuals search engine

5. Select the Hold mode.
6. While driving in S range (Hold mode) and 2nd gear, shift the selector lever to L range and verify that 2nd gear is held until the 2 → 1 downshift point as shown in the L range (Hold) shift diagram is achieved.
7. Accelerate the vehicle in L range (Hold mode) and verify that 1st gear is held.

L-range (Hold) shift diagram

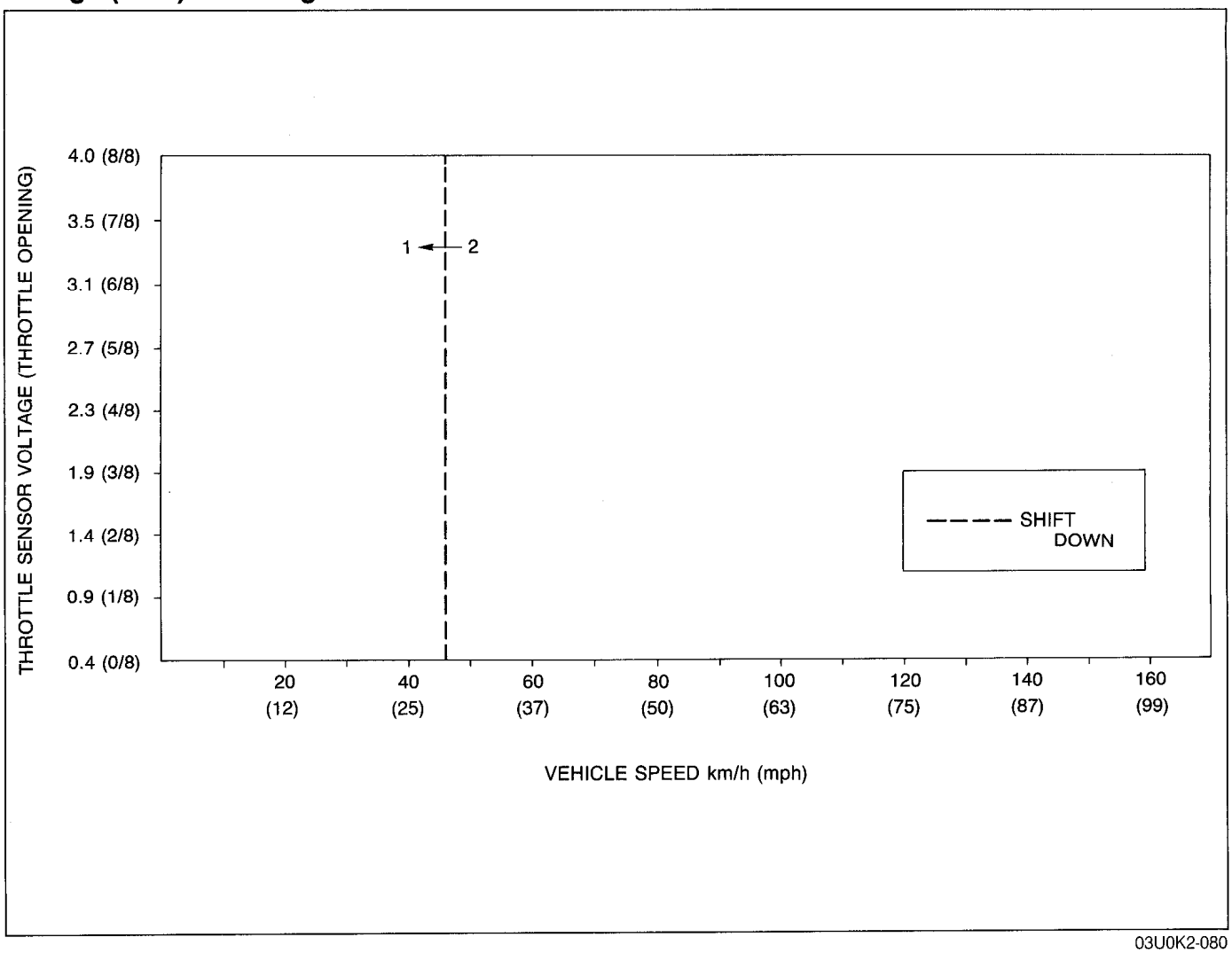

03U0K2-080

Noise and Vibration

Note
- **Abnormal noise and vibration can also be caused by the torque converter, driveshaft or differential. Therefore, check for the cause with extreme care.**

Drive the vehicle in 1st gear (Hold mode) and check for abnormal noise and vibration.

P-RANGE TEST

1. Shift into P range on a gentle slope, release the brake, and verify that the vehicle does not roll.

03U0KX-115

Downloaded from www.Manualslib.com manuals search engine

Vehicle Speed at Shiftpoint Table

Mode	Range	Throttle condition (Throttle sensor voltage)	Shift	Drum speed rpm	Vehicle speed km/h (mph)
NORMAL	D	Fully opened (4.0V)	$D_1 \rightarrow D_2$	4,900—5,500	49—55 (30—34)
			$D_2 \rightarrow D_3$	5,100—5,550	93—101 (58—63)
			$D_3 \rightarrow OD$	5,200—5,500	145—155 (90—96)
		Half throttle (1.6—2.2V)	$D_1 \rightarrow D_2$	2,800—3,700	28—37 (17—23)
			$D_2 \rightarrow D_3$	3,300—4,250	60—77 (37—48)
			$D_3 \rightarrow OD$	3,500—4,300	98—121 (61—75)
			Lockup ON (OD)	2,100—2,750	84—110 (52—68)
		Kickdown	$OD \rightarrow D_3$	3,300—3,600	133—143 (82—89)
			$D_3 \rightarrow D_2$	3,100—3,350	86—94 (53—58)
			$D_2 \rightarrow D_1$	2,000—2,300	36—42 (22—26)
	S	Fully opened (4.0V)	$S_1 \rightarrow S_2$	4,900—5,500	49—55 (30—34)
			$S_2 \rightarrow S_3$	5,100—5,550	93—101 (58—63)
			Lockup ON (S_3)	3,850—4,150	108—116 (67—72)
			$S_3 \rightarrow S_2$	3,100—3.350	86—94 (53—58)
			$S_2 \rightarrow S_1$	2,000—2,300	36—42 (22—26)
		Half throttle (1.6—2.2V)	$S_1 \rightarrow S_2$	2,800—3,700	28—37 (17—23)
			$S_2 \rightarrow S_3$	3,300—4,250	60—77 (37—48)
			Lockup ON (S_3)	3,700—4,150	104—116 (65—72)
	L	Fully opened (4.0V)	$L_1 \rightarrow L_2$	4,900—5,500	49—55 (30—34)
			$L_2 \rightarrow L_1$	2,000—2,300	36—42 (22—26)
		Half throttle (1.6—2.2V)	$L_1 \rightarrow L_2$	2,800—3,700	28—37 (17—23)
HOLD	D	Fully opened (4.0V)	$D_1 \rightarrow D_2$	2,700—3,300	27—33 (17—20)
			$D_2 \rightarrow D_3$	2,200—2,750	40—50 (25—31)
			$D_3 \rightarrow D_1$	250—500	7—13 (4—9)
	S	Fully closed (0.5V)	$S_3 \rightarrow S_2$	3,100—3,300	87—93 (54—58)
	L		$L_2 \rightarrow L_1$	2,400—2,700	43—49 (27—30)

03U0K2-081

Downloaded from www.Manualslib.com manuals search engine

Slippage Test

This step is performed to inspect slippage of the friction elements.

Preparation

1. Connect a tachometer to the engine and set it in the cabin.
2. Connect the **EC-AT Tester Set** between the EC-AT control unit and wiring harness.

Procedure

Drive the vehicle in each of the gears indicated below and check whether the vehicle speed or engine speed is above or below specification as shown by the turbine speed.

Driving condition			Speed	Drum speed (rpm)			
No.	Gears	Other condition		1,000	2,000	3,000	4,000
1	1st	L range, Hold mode	Vehicle speed km/h (mph)	10 (6)	20 (12)	30 (19)	40 (25)
2	1st	D range, Normal mode		10 (6)	20 (12)	30 (19)	40 (25)
3	2nd	S range, Hold mode		18 (11)	36 (22)	55 (34)	73 (45)
4	3rd	D range, Hold mode		28 (17)	56 (35)	84 (52)	112 (69)
5	OD	D range, Normal mode		40 (25)	80 (50)	120 (74)	160 (99)
6	OD	D range, Normal mode, Lockup	Engine speed (rpm)	1,000	2,000	3,000	4,000

03U0K2-082

Evaluation

When there is no malfunction in the electrical system or hydraulic system, but vehicle speed or engine speed is below specification, the problem can be attributed to slippage of the friction elements.

Driving conditions below specification	Possible Cause
No.1 condition only	Low and reverse brake
No.2 condition only	One-way clutch 1
No.3 condition only	2-4 brake band
No.4 condition only	Coasting clutch
No.5 condition only	3-4 clutch
No.1—No.5 conditions	Forward clutch
No.6 condition only	Lookup piston (in torque converter)

03U0KX-118

Downloaded from www.Manualslib.com manuals search engine

AUTOMATIC TRANSAXLE FLUID (ATF)

ATF
Inspection
Level

Caution
- **Place the vehicle on a flat, level surface.**

1. Apply the parking brake and position wheel chocks securely to prevent the vehicle from rolling.
2. Warm-up the engine until the ATF reaches **60—70°C (140—158°F)**.

03U0KX-119

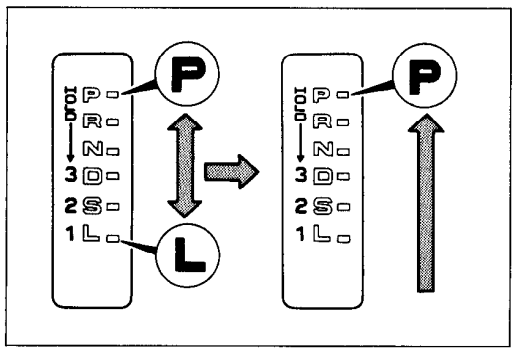

03U0KX-120

3. While the engine is idling, shift the selector lever from P to L and back to P.
4. Let the engine idle.
5. Shift the selector lever to P.

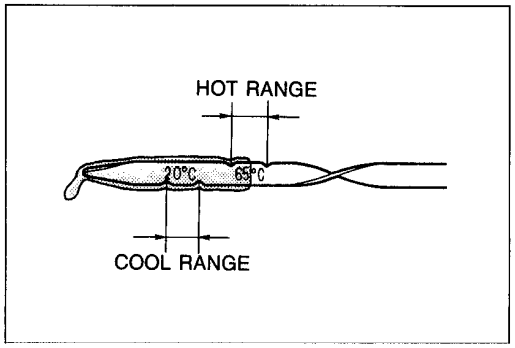

03U0K2-309

Note
- **Only use the COOL 20°C (68°F) range as a rough reference.**

6. Ensure that the ATF level is in the HOT 65°C (149°F) range. Add ATF to specification, if necessary.

ATF type: M-III or DEXRON-II

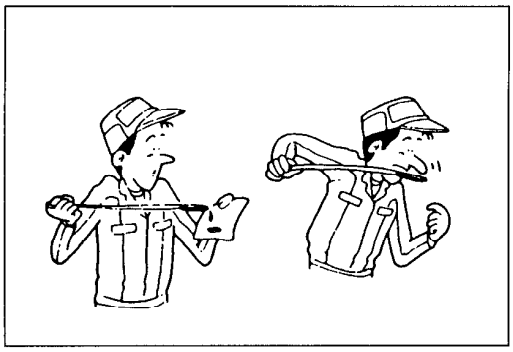

03U0KX-122

Condition

Note
- **Determine whether or not the automatic transmission should be disassembled by observing the condition of the ATF carefully.**
  If the ATF is muddy and varnished, it indicates burned drive plates.

1. Check the ATF for discoloration.
2. Check the ATF for any unusual smell.

Downloaded from www.Manualslib.com manuals search engine

Fluid leaks

Check for fluid leaks of the transaxle at the points shown below and repair or replace as necessary.

1. Gaskets, O-rings, and plugs.
2. Oil hoses, oil pipes, and connections.
3. Oil cooler.

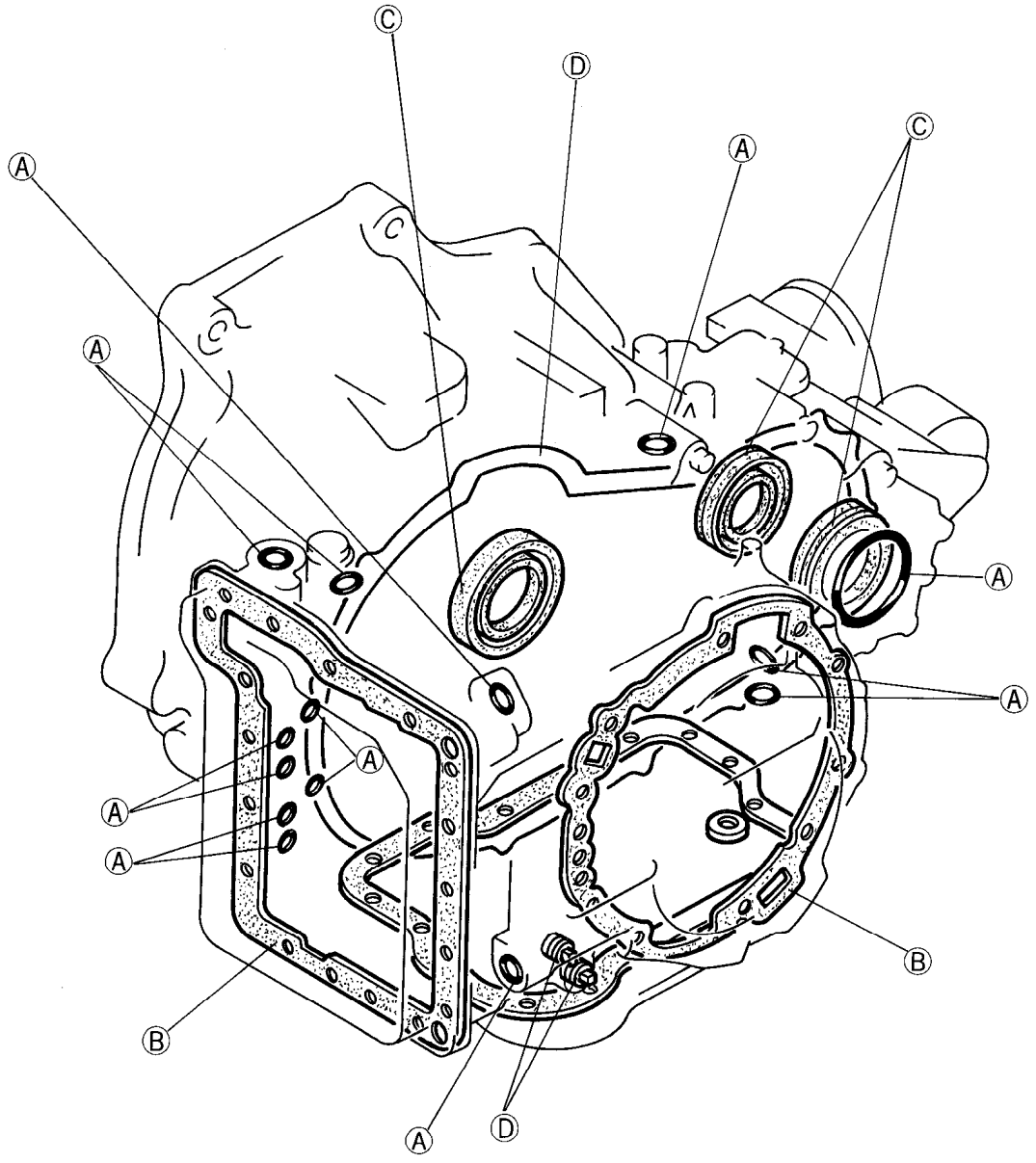

Ⓐ ..... O-RING
Ⓑ ..... GASKET
Ⓒ ..... OIL SEAL
Ⓓ ..... OTHERS

03U0KX-123

Downloaded from www.Manualslib.com manuals search engine

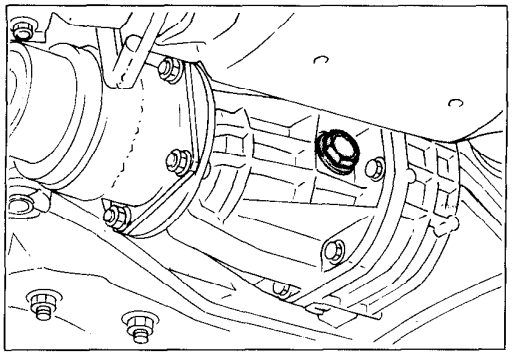

03U0K2-083

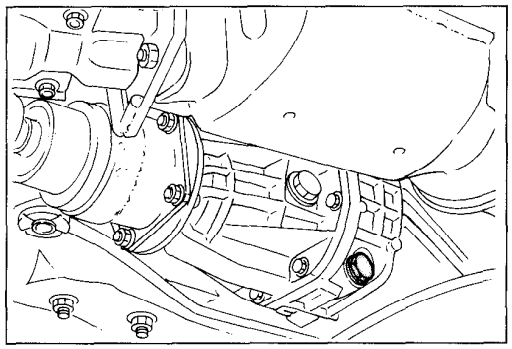

03U0K2-084

TRANSFER CARRIER OIL

INSPECTION

Note
- **Park the vehicle on level ground.**

1. Remove the check plug.
2. Verify that the oil is at the bottom of the plug port. If it is low, add the specified oil from plug port.
3. Install the check plug.

Tightening torque:
39—58 N·m (4.0—6.0 m-kg, 28—43 ft-lb)

REPLACEMENT

1. Remove the drain plug. Drain the oil into a suitable container.
2. Install the drain plug.

Tightening torque:
39—58 N·m (4.0—6.0 m-kg, 28—43 ft-lb)

3. Add the necessary amount of the specified oil through the plug port.

Specified oil: SAE 75W-90
Capacity: 0.5 liter (0.53 US qt, 0.44 Imp qt)

Downloaded from www.Manualslib.com manuals search engine

THROTTLE CABLE

PREPARATION
SST

49 0378 400A Gauge set, oil pressure 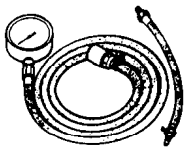	For adjustment of throttle cable	49 B019 901 Gauge, oil pressure 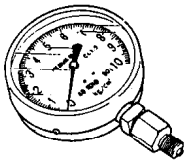	For adjustment of throttle cable

03U0K2-085

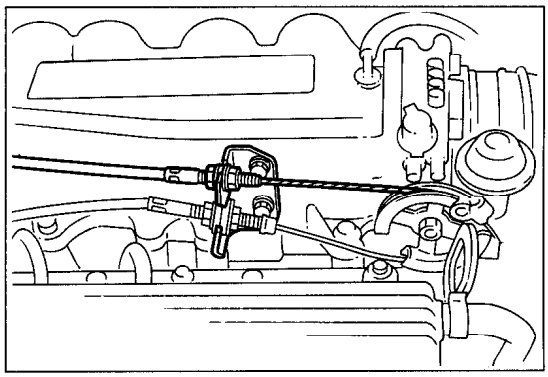

03U0KX-125

THROTTLE CABLE
Inspection

1. Check the inner and outer cable for damage.
2. Verify that the accelerator operates smoothly.

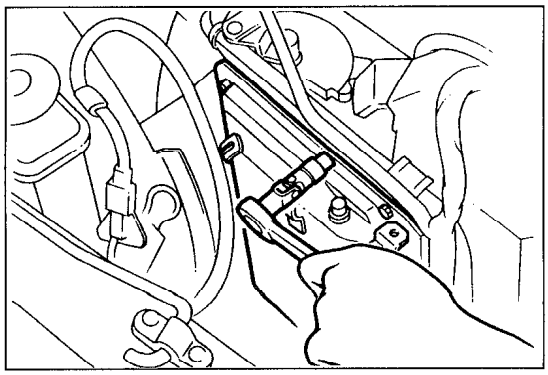

03U0K2-086

Replacement

1. Disconnect the oil hose.
2. Remove the throttle cable from the throttle lever.
3. Drain the ATF.

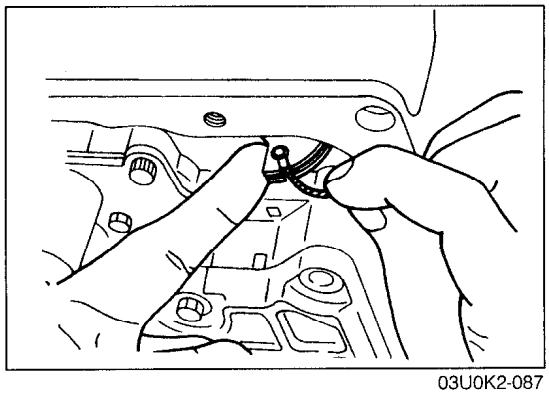

03U0K2-087

4. Remove the control valve body cover and gasket.
5. Remove the throttle cable from the throttle cam.
6. Remove the harness bracket.

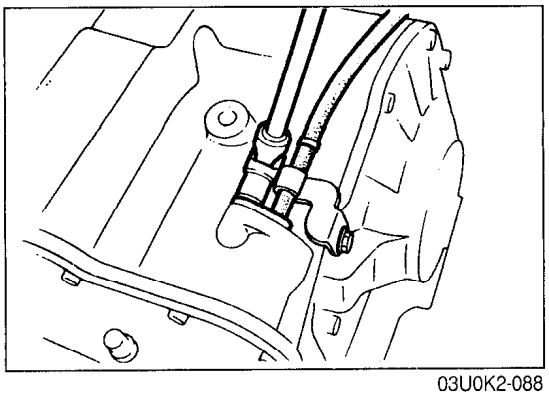

03U0K2-088

7. Remove the throttle cable from the transaxle.
8. Remove the O-ring.

Downloaded from www.Manualslib.com manuals search engine

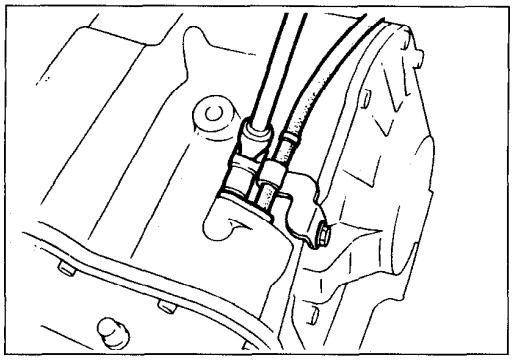

03U0K2-089

9. Install the throttle cable and a new O-ring into the transaxle.

Tightening torque:
8—11 N·m (80—110 cm-kg, 69—95 in-lb)

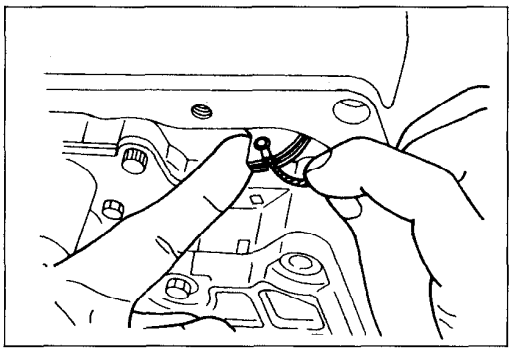

03U0K2-090

10. Install the harness bracket.

Tightening torque:
8—11 N·m (80—110 cm-kg, 69—95 in-lb)

11. Install the throttle cable to the throttle cam.
12. Temporarily install the throttle cable to the throttle lever.

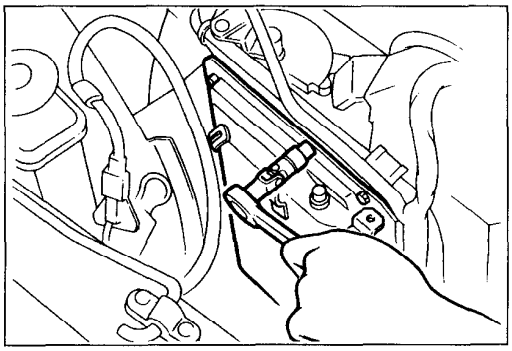

03U0K2-091

13. Install the control valve body cover and a new gasket.

Tightening torque:
8.3—11.0 N·m (85—110 cm-kg, 74—100 in-lb)

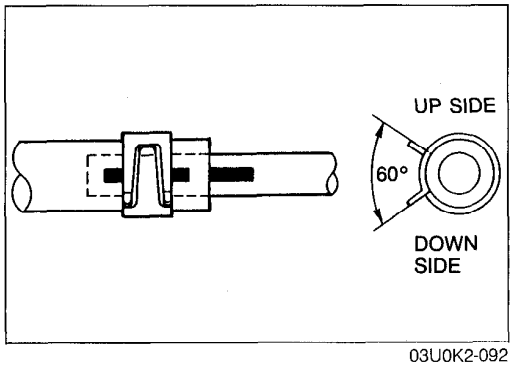

03U0K2-092

14. Align the marks, and slide the oil cooler hose onto the oil cooler pipe until it is fully seated against the ridge.
15. Install the hose clamp onto the hose at the center of the mark and at the angle shown.
16. Verify that the hose clamp does not interfere with any other parts.
17. After installation, add ATF.
18. Check the ATF level and for leaks.
19. Adjust the throttle cable.

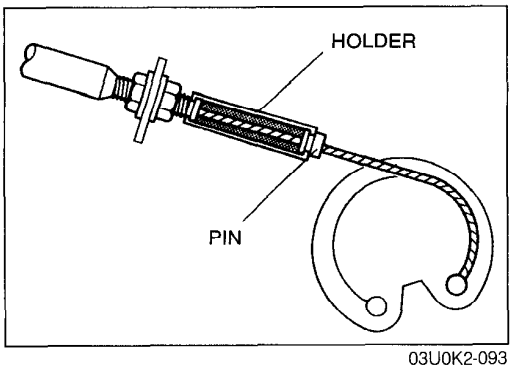

03U0K2-093

20. Fully open the throttle valve, and crimp the pin with the holder installed as shown.

Downloaded from www.Manualslib.com manuals search engine

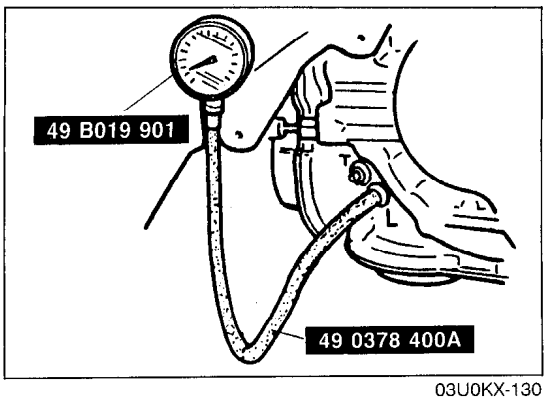

03U0KX-130

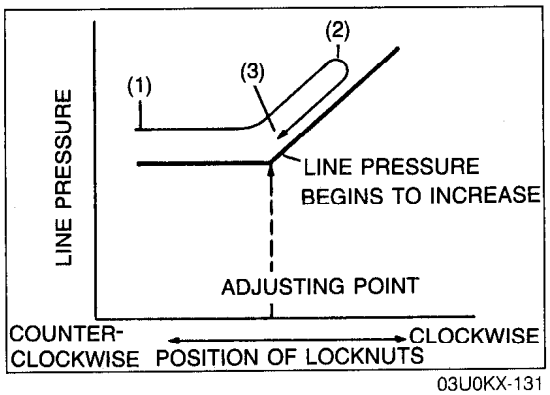

03U0KX-131

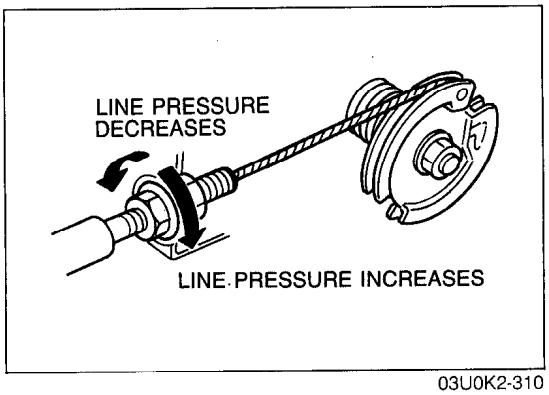

03U0K2-310

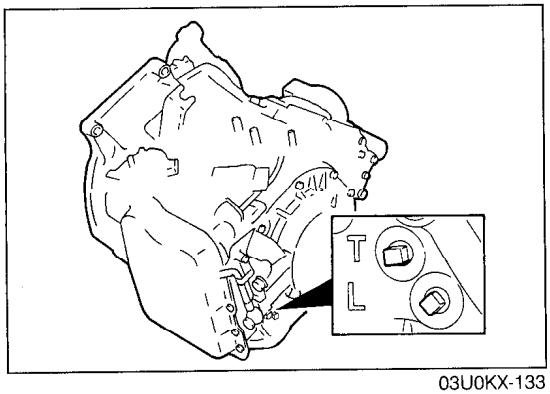

03U0KX-133

Adjustment

1. Remove the square head plug L and install the **SST**.
2. Shift into P range and start the engine. Warm up the engine to normal operating temperature, and adjust the idle speed if necessary.

   Idle speed:
   750 ± 50 rpm (with parking brake applied)

3. Adjust the locknuts as follows:
   When the locknuts are rotated, line pressure is increased or decreased as shown. Adjust the locknuts to the correct position using the following procedure.
   (1) Initially install the locknuts fully away from the throttle cam. (Loosen the cable all the way)
   (2) Adjust the locknuts in a clockwise direction as viewed from the passenger side of the vehicle until the line pressure exceeds the specification.
   (3) Adjust the locknuts in a counterclockwise direction until the line pressure decreases to the specification. Tighten the locknuts.

   Adjustment pressure:
   431—451 kPa (4.4—4.6 kg/cm^2, 63—65 psi)

   (4) Tighten the locknuts and verify that the line pressure is as specified.

   Specified pressure: 441 kPa (4.5 kg/cm^2, 64 psi)

   Note
   - **Transaxle in P range.**

4. Turn off the engine.
5. Install a new square head plug L.

   Tightening torque:
   5—10 N·m (50—100 cm-kg, 43—87 in-lb)

Downloaded from www.Manualslib.com manuals search engine

ELECTRONIC SYSTEM COMPONENTS

HOLD SWITCH

Inspection

Inspection of operation

1. Turn the ignition switch OFF→ON.
2. Verify that the HOLD indicator is not illuminated. Depress the switch and verify that the HOLD indicator comes ON.
3. If not as specified, check the terminal voltage of the hold switch.

03U0KX-134

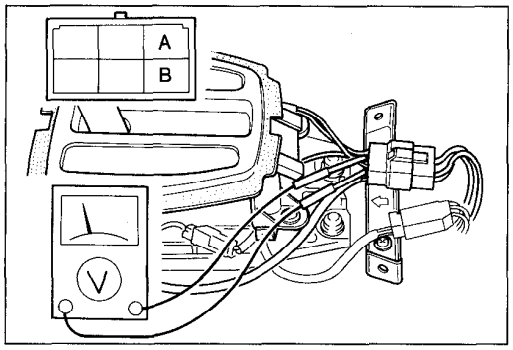

03U0KX-135

Inspection of voltage

1. Remove the rear console.
2. Turn the ignition switch ON.
3. Check the voltage between terminals A and B.

Terminal voltage	Switch
Approx. 12V	Released
Below 1.5V	Depressed

4. If not correct, go to the next step.

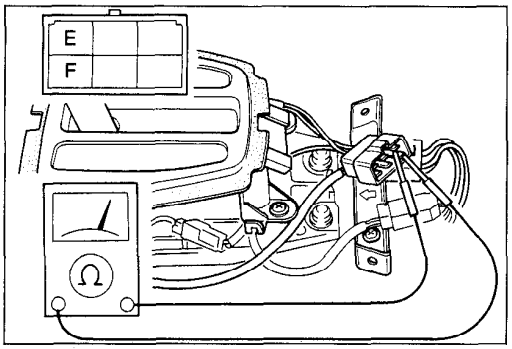

03U0KX-136

Inspection of continuity

1. Disconnect the connector.
2. Check continuity between terminals E and F.

Continuity	Switch
Yes	Released
No	Depressed

3. If not correct, replace the selector lever knob as an assembly.

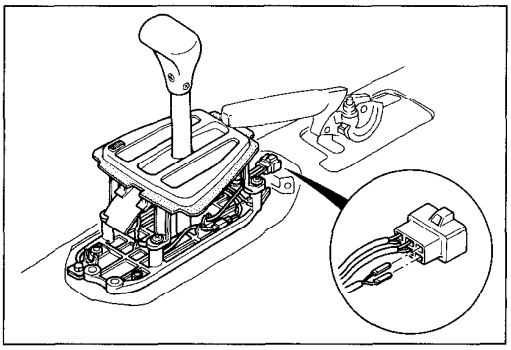

03U0KX-137

Replacement

1. Remove the rear console.
2. Disconnect the connector.
3. Remove the selector lever knob.
4. Install a new selector lever knob.
5. Install the rear console.

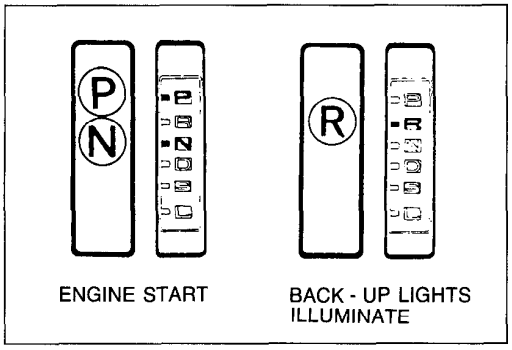

03U0KX-138

INHIBITOR SWITCH

Inspection

Inspection of operation

1. Verify that the starter operates with the ignition switch at START position and the selector lever in P and N ranges only.
2. Verify that the back-up lights illuminate when shifted to R range with the ignition switch in ON position.
3. Check the inhibitor switch if not as specified.

Downloaded from www.Manualslib.com manuals search engine

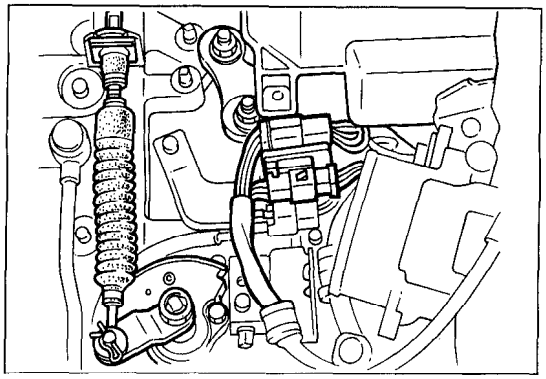

03U0KX-139

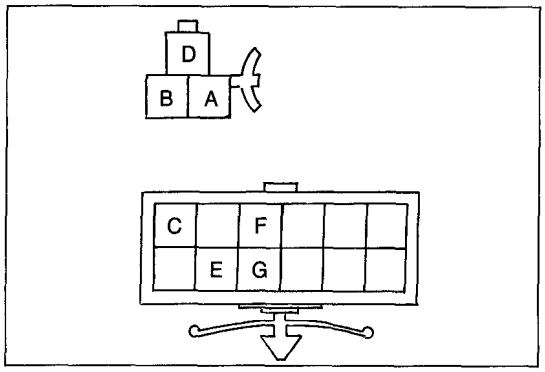

03U0K2-094

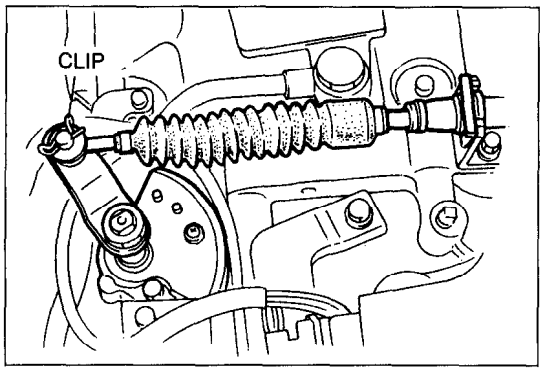

03U0K2-095

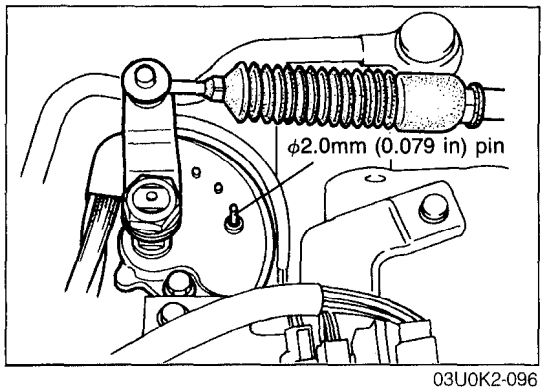

03U0K2-096

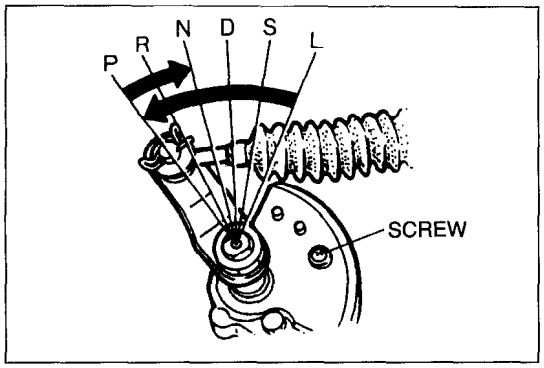

03U0K2-097

Inspection of continuity

1. Disconnect the inhibitor switch connector.
2. Check continuity of the terminals.

Position	Connector terminal						
	A	B	C	D	E	F	G
P	○—○						
R			○	—○			
N	○—	—○					
D			○	—	—○		
S			○	—	—	—○	
L			○—	—	—	—	—○

○—○: Indicates continuity

3. If not correct, replace the switch and perform adjustment of the inhibitor switch.
4. If correct, check or adjust the selector lever.

Replacement

1. Disconnect the negative battery cable.
2. Remove the air hose and disconnect the harness.
3. Remove the clip.
4. Remove the bolts and the manual shaft nuts.
5. Install the new inhibitor switch and the manual shaft nuts.

Tightening torque:
8—11 N·m (80—110 cm-kg, 69—95 in-lb)

6. Align the holes of the inhibitor switch and the selector lever by inserting an **approx. 2.0mm (0.079 in)** diameter pin.
7. Connect the harness and install the air hose.
8. Connect the negative battery cable.
9. Inspection of inhibitor switch.

Adjustment

1. Remove the air hose.
2. Turn the manual shaft to N position.
3. Loosen the inhibitor switch mounting bolts.
4. Align the holes of the inhibitor switch and the manual shaft lever by inserting an **approx. 2.0mm (0.079 in)** diameter pin.
5. Tighten the mounting bolts.

Tightening torque:
8—11 N·m (80—110 cm-kg, 69—95 in-lb)

6. Recheck the continuity of the inhibitor switch.
7. If not correct, replace the inhibitor switch.

Downloaded from www.Manualslib.com manuals search engine

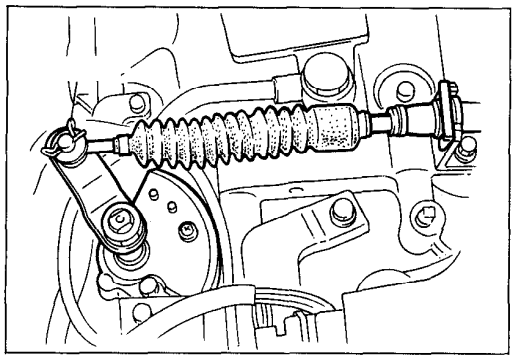

03U0K2-098

8. Connect the selecter lever.

Tightening torque:
44—64 N·m (4.5—6.5 m-kg, 33—47 ft-lb)

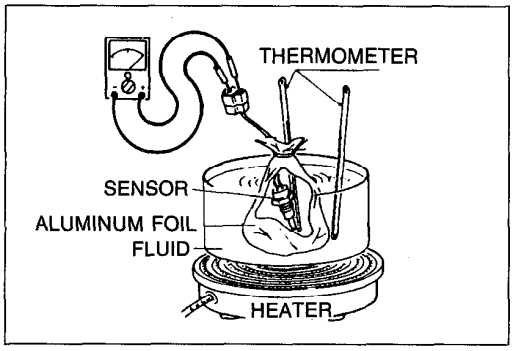

03U0K2-099

ATF THERMOSWITCH

Inspection

1. Remove the ATF thermoswitch.
2. Place the switch in oil with a thermometer as shown, and heat it up gradually.
3. Check the continuity of the terminals. If necessary replace the switch.

Connection guide

Fluid temperature	Continuity
Above 150 ± 3°C (302 ± 37°F)	Yes
Below 143°C (289°F)	No

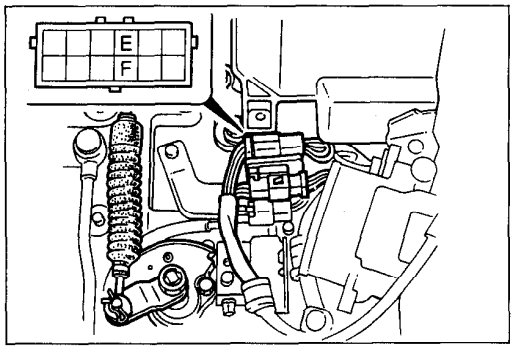

03U0KX-145

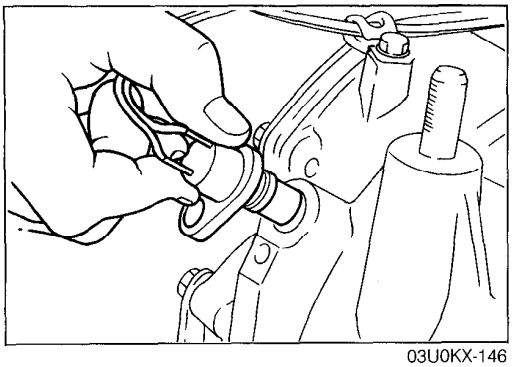

03U0KX-146

PULSE GENERATOR

Inspection

Inspection of resistance

1. Disconnect the pulse generator connector.
2. Measure resistance between the terminals E and F.

Resistance: 200—400Ω

3. If not correct, replace the pulse generator.

Tightening torque:
8—11 N·m (80—110 cm-kg, 69—95 in-lb)

Downloaded from www.Manualslib.com manuals search engine

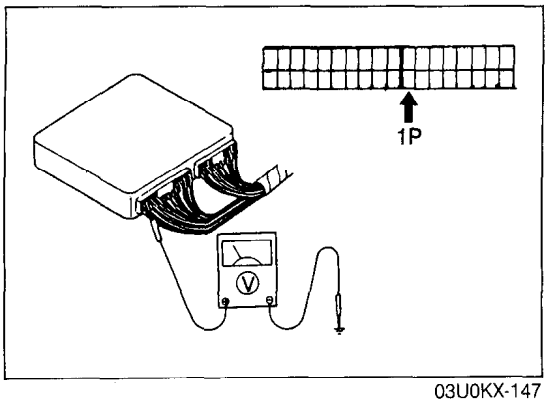

03U0KX-147

SPEED SENSOR

Inspection

1. Connect a voltmeter between the terminal 1P and a ground as shown.
2. Turn the ignition switch ON.

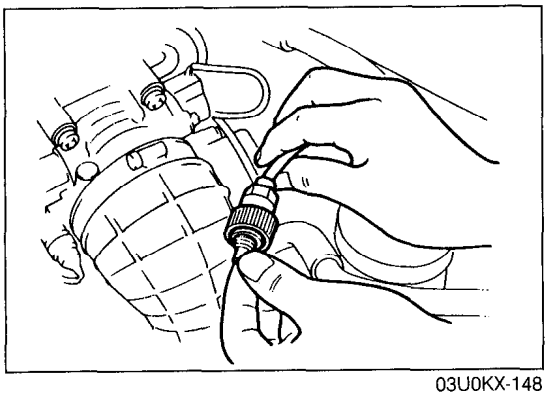

03U0KX-148

3. Remove the speedometer cable from the transmission.
4. Slowly turn the speedometer cable one turn.
5. Verify that **approx. 7V** is shown 4 times.
6. If not correct, check the speedometer and cable.

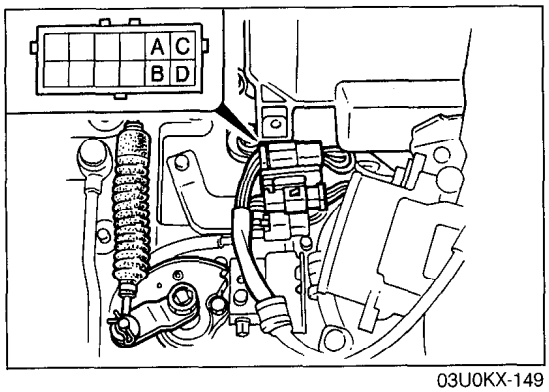

03U0KX-149

SOLENOID VALVE

Inspection

1. Disconnect the solenoid valve connector.
2. Measure resistance between each terminal and a ground.

Resistance: 13—27Ω

Note

- **1-2 shift solenoid valve: A**
- **2-3 shift solenoid valve: B**
- **3-4 shift solenoid valve: C**
- **Lockup solenoid valve: D**

3. If not correct, check the wiring for an open-or short-circuit. Replace the solenoid valve.

Continuity

1. Disconnect the 20-pin connector from the EC-AT control unit.
2. Check continuity between terminals 2E, 2G, 2I, and 2K, and a ground.
3. If not correct, check the wiring for an open-circuit.

03U0KX-150

Downloaded from www.Manualslib.com manuals search engine

EC-AT CONTROL UNIT

Inspection

1. Turn the ignition switch ON, and check the EC-AT control unit terminal voltage, referring to the Terminal Voltage Chart.
2. If not correct, check and replace or repair the component(s), wiring, and/or EC-AT control unit.

03U0KX-151

Terminal Voltage Chart

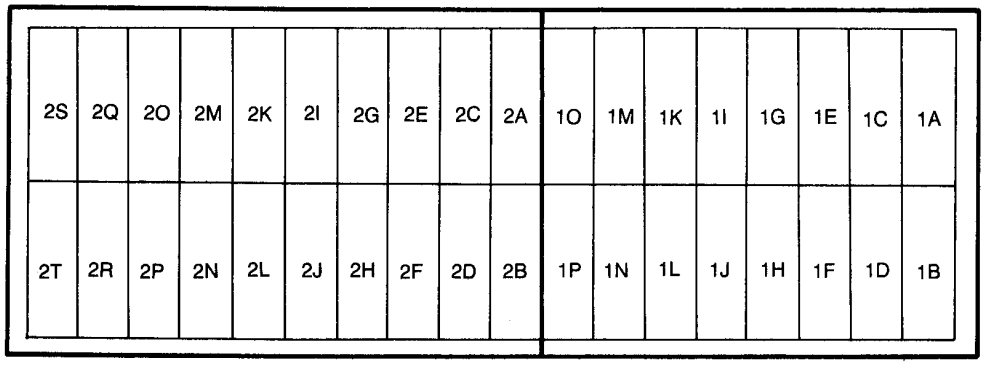

9MU0K1-083

Terminal	Connection to	Voltmeter		Voltage	Condition
		+ terminal	–terminal		
1A	—	—	—	—	—
1B (Output)	Hold indicator	1B	Ground	Below 1.5V	Hold mode
				Approx. 12V	Normal mode
1C (Output)	EC-AT tester (Malfunction code)	1C		Approx. 12V	Normal (With EC-AT Tester)
				Below 1.5V or Approx. 12V (fluctuating)	If malfunction present (With EC-AT Tester)
				Code signal	Diagnosis connector grounded (With EC-AT Tester)
1D (Output)	No load signal	1D		Approx. 12V	P or N ranges
				Below 1.5V	Other ranges
1E (Input)	Diagnosis connector	1E		Approx. 12V	Normal
				Below 1.5V	TAT terminal grounded
1F (Input)	Stoplight switch	1F		Approx. 12V	Brake pedal depressed
				Below I.5V	Brake pedal released
1G (Input)	ATF thermoswitch	1G		Below 1.5V	Above 145°C (293°F)
				Approx. 12V	Below 138°C (211°F)
1H (Input)	Hold switch	1H		Below 1.5V	Switch depressed
				Approx. 12V	Switch released
1I	—	—	—	—	—
1J (Ground)	Battery ground	1J	Ground	Below 1.5V	—
1K	—	—	—	—	—
1L	—	—	—	—	—
1M	—	—	—	—	—

Downloaded from www.Manualslib.com manuals search engine

Terminal	Connected to	Voltmeter		Voltage	Condition
		+ terminal	– terminal		
1N (Input)	Water thermo signal	1N	Ground	Approx. 12V	Above 72°C (162°F)
				Below 1.5V	Below 67°C (153°F)
1O (Input)	Idle switch	1O	Ground	Approx. 12V	Idle switch OFF (Throttle valve open)
				Below 1.5V	Idle switch ON (Throttle valve fully closed)
1P (Input)	Vehicle speed sensor	1P		Approx. 3V—4V	While driving
				Approx. 3V—4V or below 1.5V	Vehicle stopped
2A (Input)	Throttle sensor	2A		Approx. 5V	Ignition switch ON
				Below 1.5V	Ignition switch OFF
2B (Input)	Inhibitor switch (P and N ranges)	2B	Ground	Below 1.5V	P and N ranges
				Approx. 12V	Other ranges
2C	—	—	—	—	—
2D (Input)	Inhibitor switch (D range)	2D	Ground	Approx. 12V	D range
				Below 1.5V	Other ranges
2E (Input)	1-2 shift solenoid valve	2E		Approx. 12V	Refer to page K2–109 of solenoid valve operation table
				Below 1.5V	
2F (Input)	Inhibitor switch (S range)	2F		Approx. 12V	S range
				Below 1.5V	Other ranges
2G (Input)	2-3 shift solenoid valve	2G		Approx. 12V	Refer to page K2–109 of solenoid valve operation table
				Below 1.5V	
2H (Input)	Inhibitor switch (L range)	2H		Approx. 12V	L range
				Below 1.5V	Other ranges
2I (Input)	3-4 shift solenoid valve	2I		Approx. 12V	Refer to page K2–109 of solenoid valve operation table
				Below 1.5V	
2J (Input)	Pulse generator*	2J		Above 1V (AC)	Engine running (N range)
				Approx. 0V (AC)	Engine stopped
2K (Input)	Lockup solenoid valve	2K		Approx. 12V	Lockup
				Below 1.5V	Other
2L (Ground)	Pulse generator	2L		Below 1.5V	—
2M (Input)	Engine control unit	2M		Approx. 12V	Shift down with throttle valve opening 2/8 or more
				Below 1.5V	Others
2N	—	—	—	—	—
2O (Memory power)	Battery	2O	Ground	Approx. 12V	Constant
2P (Ground)	Battery ground	2P		Below 1.5V	—
2Q (Battery power)	Battery	2Q		Approx. 12V	Ignition switch ON
				Below 1.5V	Ignition switch OFF
2R	—	—	—	—	—
2S (Battery power)	Battery	2S	Ground	Approx. 12V	Ignition switch ON
				Below 1.5V	Ignition switch OFF
2T (Input)	Throttle sensor	2T		Approx. 0.4—4.4V	Throttle valve fully closed to fully open

* Checked in AC range

03U0K2-100

Downloaded from www.Manualslib.com manuals search engine

WIRE HARNESS
Wiring diagram

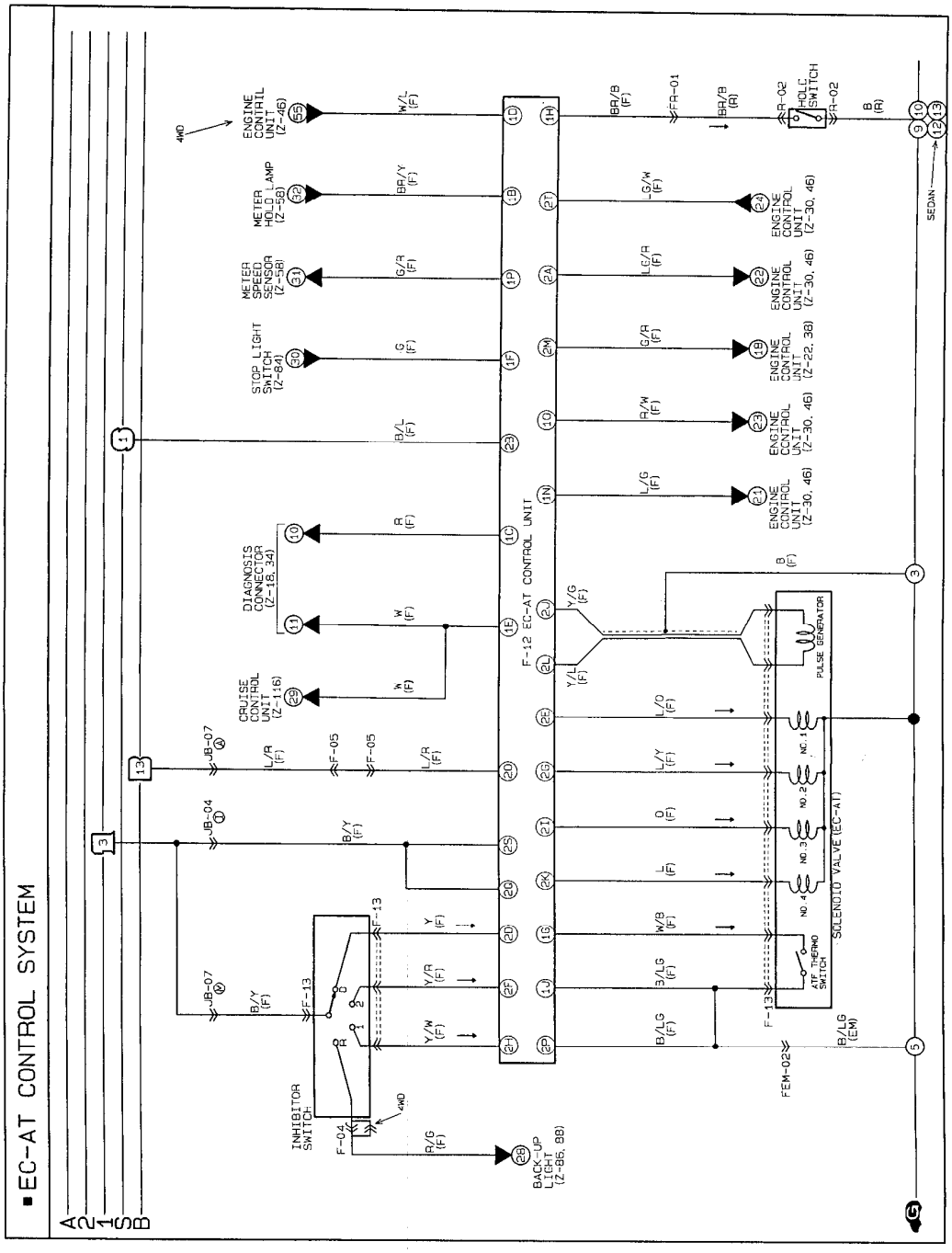

03U0KX-153

Downloaded from www.Manualslib.com manuals search engine

TRANSAXLE AND TRANSFER UNIT

TRANSAXLE AND TRANSFER ASSEMBLY

Preparation

SST

49 G017 5A0 Support, engine 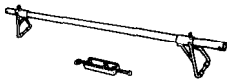	For support of engine	49 G017 503 Hock (Part of 49 G017 5A0) 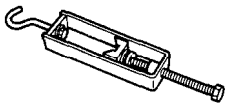	For support of engine
49 G017 501 Bar (Part of 49 G017 5A0)	For support of engine	49 0118 850C Puller, ball joint 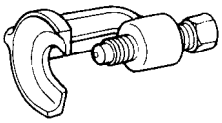	For removal of tie-rod end
49 G017 502 Support (Part of 49 G017 5A0) 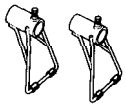	For support of engine	49 G030 455 Holder, differential side gear 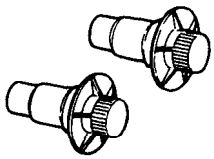	For holding side gear

03U0K2-101

Removal

1. Disconnect the negative battery cable.
2. Jack up the vehicle and support it with safety stands.

Note

- **Drain the ATF before transaxle removal.**

3. Drain the ATF into a suitable container.
4. Remove in the order shown in the figure, referring to **Removal Note**.

Caution

- **Do no turn the transaxle and transfer over before removing the oil pan.**

03U0K2-102

Downloaded from www.Manualslib.com manuals search engine

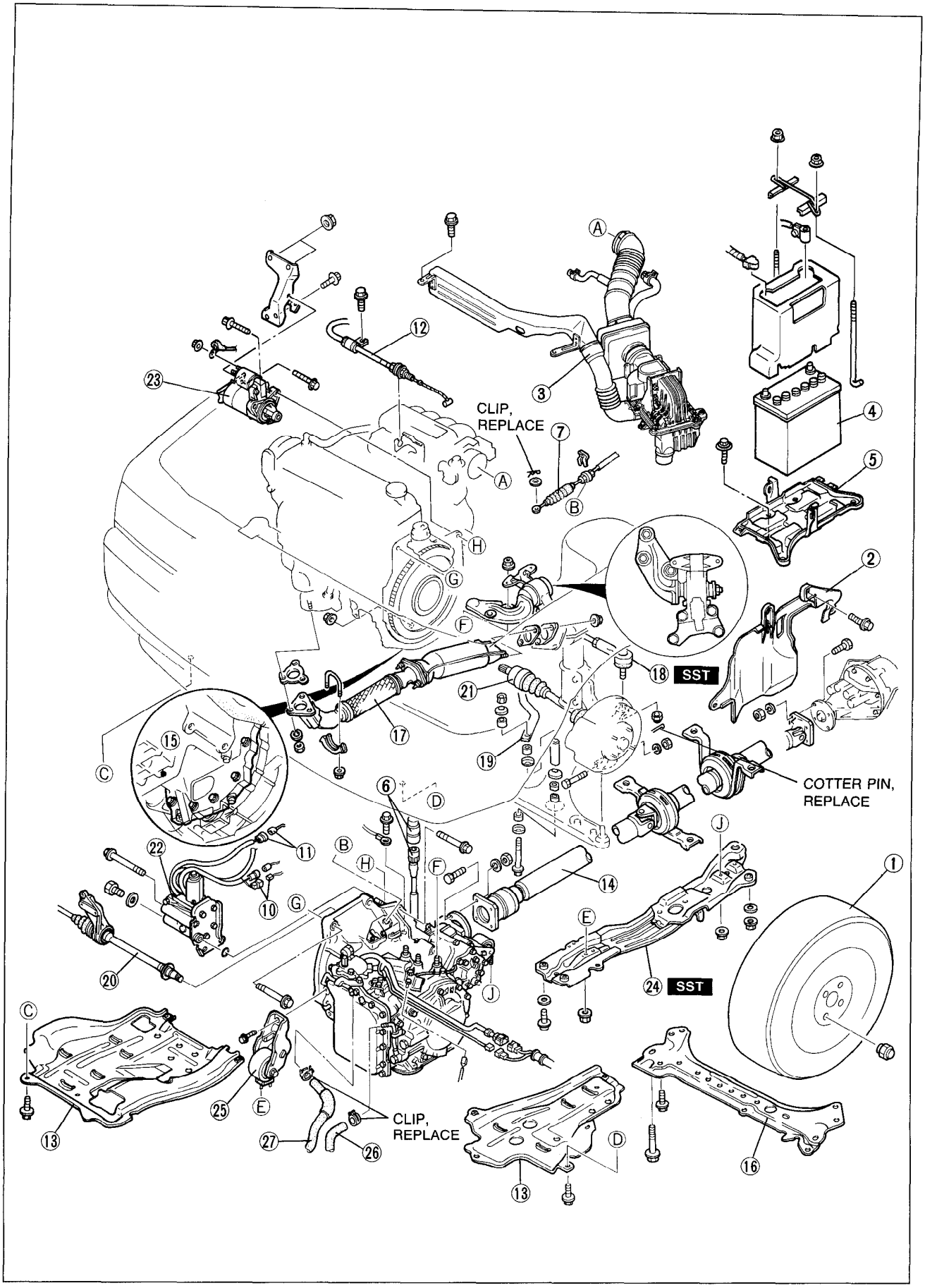

Downloaded from www.Manualslib.com manuals search engine

1. Wheel and tire
2. Splash shield
3. Air hose and air cleaner assembly
4. Battery
5. Battery carrier
6. Speedometer cable
7. Selector cable
8. Inhibitor switch connector
9. Solenoid valve connector
10. Differential lock motor connector
11. Differential lock sensor switch connector
12. Throttle cable
13. Under cover
14. Propeller shaft
    Removal Note..... page K2–149
15. Integrated stiffener
16. Cross member
17. Exhaust pipe
18. Tie-rod end
    Removal Note..... page K2–149
19. Stabilizer
20. Joint shaft
21. Driveshaft
    Removal Note..... page K2–149
22. Center differential lock motor
    Removal Note..... page K2–150
23. Starter
24. Engine mount member
    Removal Note..... page K2–151
25. Engine mount No.2
26. Oil hose (In side)
27. Oil hose (Out side)
28. Transaxle and transfer
    Removal Note..... page K2–151

03U0K2-103

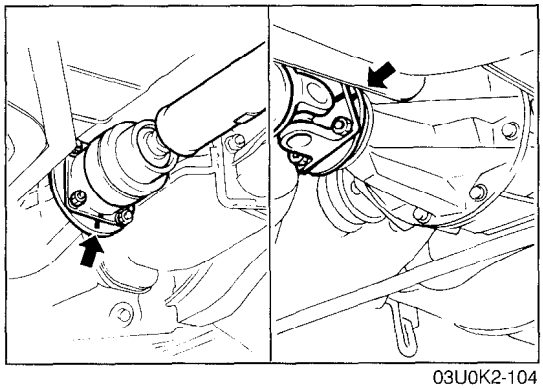

03U0K2-104

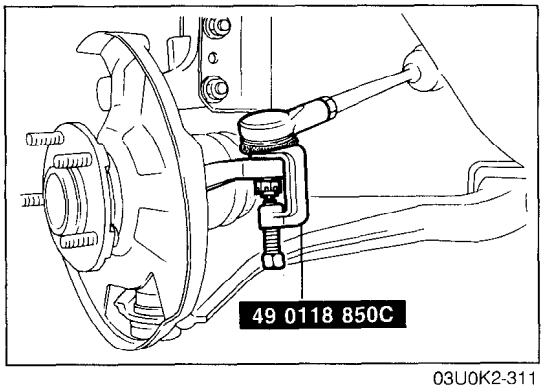

03U0K2-311

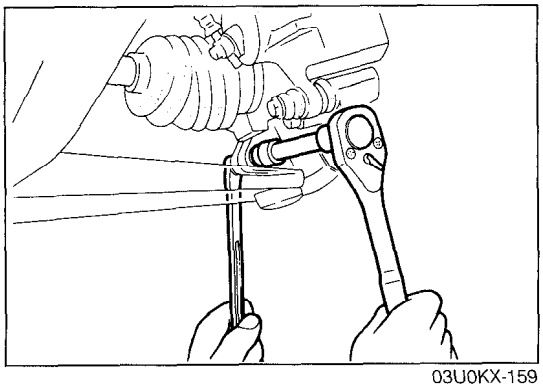

03U0KX-159

Removal note
Propeller shaft

Caution
- **Do not mark with a punch.**

1. Mark the companion flange and the flont yoke.
2. Mark the companion flange and the rear york.
3. Remove the propeller shaft.

Tie-rod end
1. Remove the tie-rod from the knuckle with the **SST**.
2. Loosen the nut and disconnect the tie-rod end with the **SST**.

Caution
- **Do not damage the dust boot.**

Driveshaft

Caution
- **Do not damage the ball joint dust boot.**

1. Remove the clinch bolts from the lower arm ball joints.
2. Pull the lower arms downward to separate them from the knuckles.

Downloaded from www.Manualslib.com manuals search engine

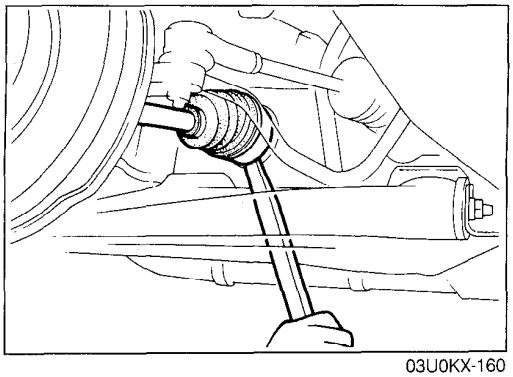

03U0KX-160

Caution
- **Do not damage the oil seal.**

3. Separate the left driveshaft from the transaxle by prying with a bar inserted between the shaft and the transaxle case.

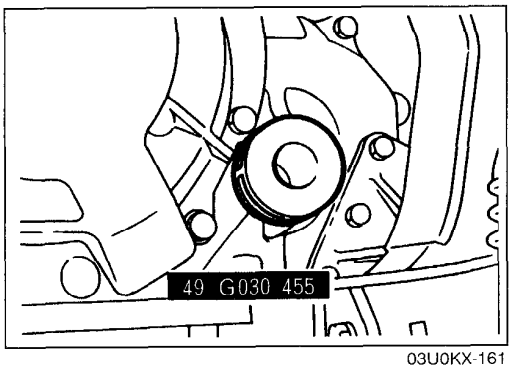

03U0KX-161

Caution
- **If the SST is not installed, the differential side gears may become misaligned.**

4. Slide the **SST** into the differential side gear.

Center differential lock motor

1. Remove the set bolt.

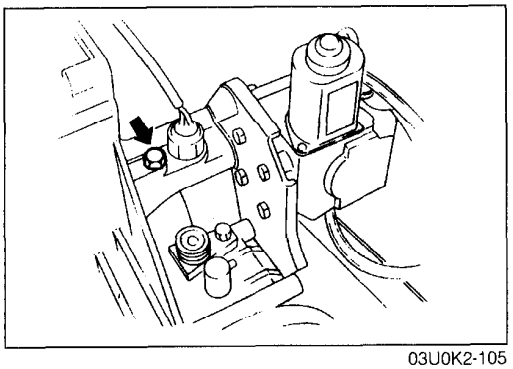

03U0K2-105

2. Remove the center differential lock sensor switch.
3. Turn the differential lock shift rod 180° clockwise with a screwdriver.

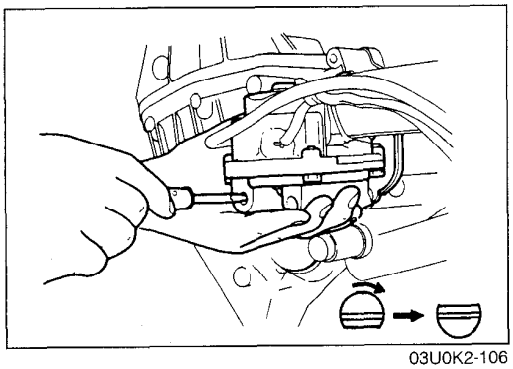

03U0K2-106

4. Remove the center differential lock motor.
5. Remove the O-ring from center differetial lock motor.

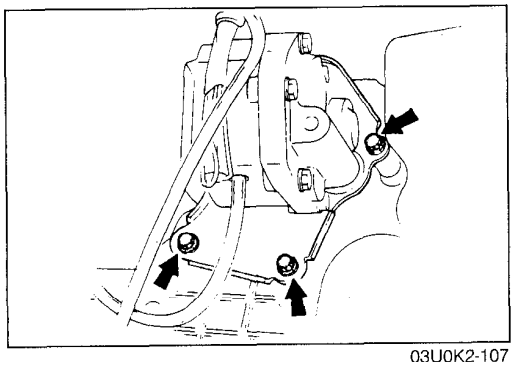

03U0K2-107

Downloaded from www.Manualslib.com manuals search engine

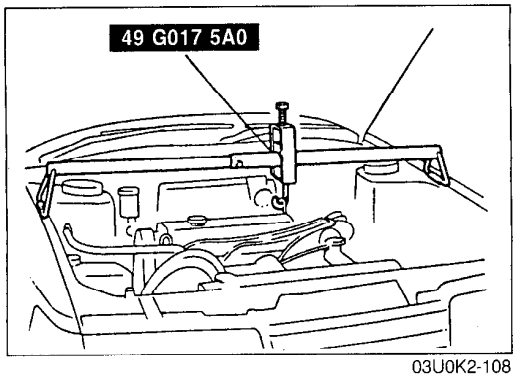

03U0K2-108

Engine mounting member

1. Suspend the engine with the **SST** before removing the engine mounting member.

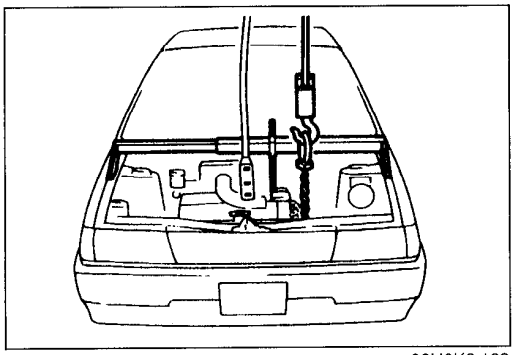

03U0K2-109

Transaxle and transfer

1. Use an engine hoist, and remove the transaxle and transfer unit.

Downloaded from www.Manualslib.com manuals search engine

TRANSAXLE AND TRANSFER UNIT (DISASSEMBLY)

Precaution

General Notes:

1. Disassemble the transaxle in a clean area (dustproof work space) to prevent entry of dust into the mechanisms.
2. Inspect the individual transaxle components in accordance with the QUICK DIAGNOSIS CHART during disassembly. (Refer to page K2–21.)
3. Use only plastic hammers when applying force to separate the light alloy case joints.
4. Never use rags during disassembly; they may leave particles that can clog fluid passages.
5. Several parts resemble one another; organize them so that they do not get mixed up.
6. Disassemble the control valve assembly and throughly clean it when the clutch or brake band has burned or when the ATF has degenerated.

Cleaning Notes:

1. Clean the transaxle exterior thoroughly with a steam cleaner or cleaning solvents before disassembly.
2. Clean the removed parts with cleaning solvent, and dry with compressed air. Clean out all holes and passages with compressed air, and check that there are no obstructions.
3. Wear eye protection when using compressed air to clean components.

03U0K2-110

Components

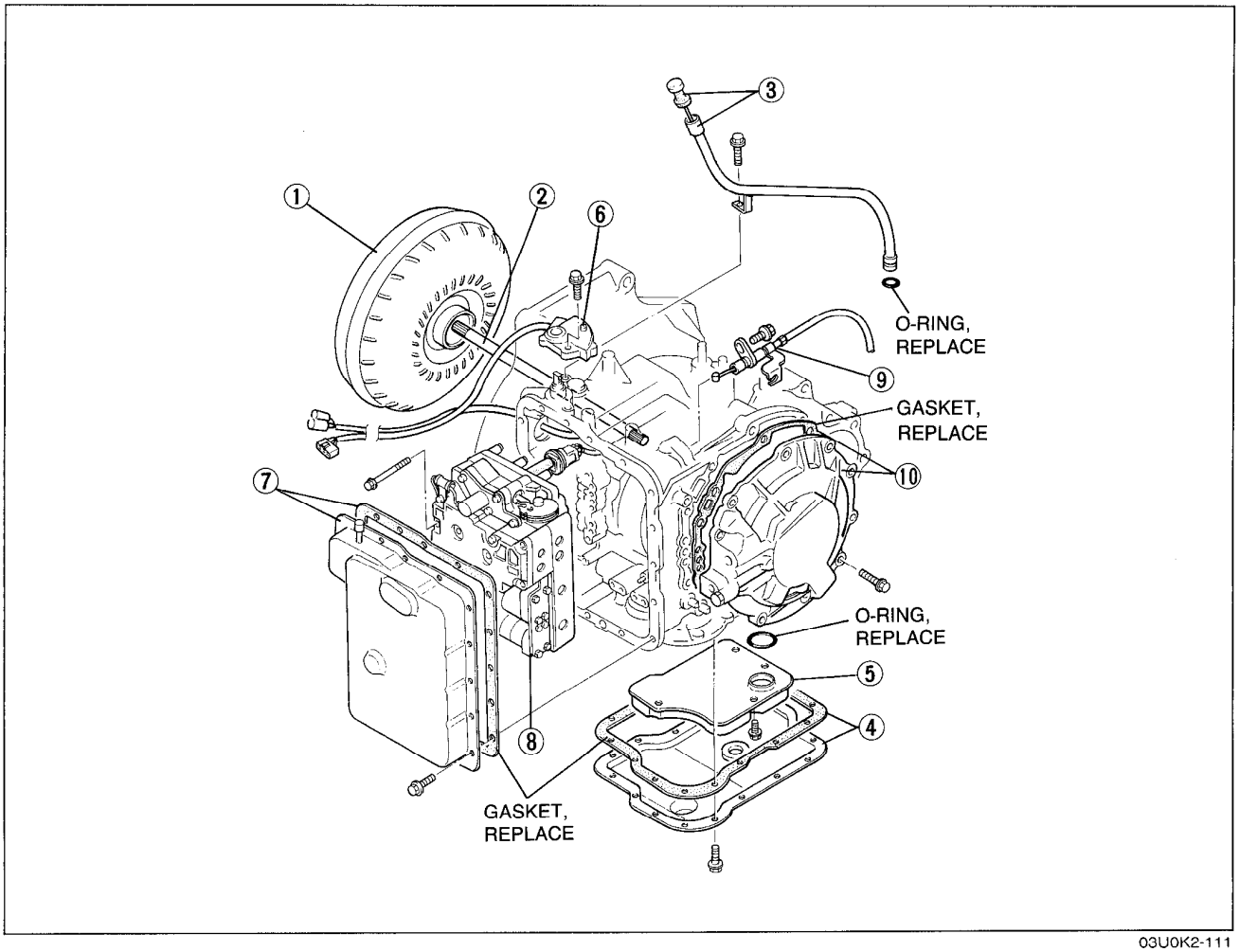

03U0K2-111

1. Torque converter
   Inspection .... page K2–167
2. Oil pump shaft
3. Oil level gauge and oil filler tube
4. Oil pan and gasket
5. Oil strainer
6. Inhibitor switch
   Inspection .... page K2–140
   Adjustment... page K2–141
7. Oil pan and gasket
8. Control valve body assembly
   Disassembly / Inspection ..... page K2–209
   Assembly ..... page K2–225
9. Throttle cable
10. Oil pump and gasket

Downloaded from www.Manualslib.com manuals search engine

Components (cont'd)

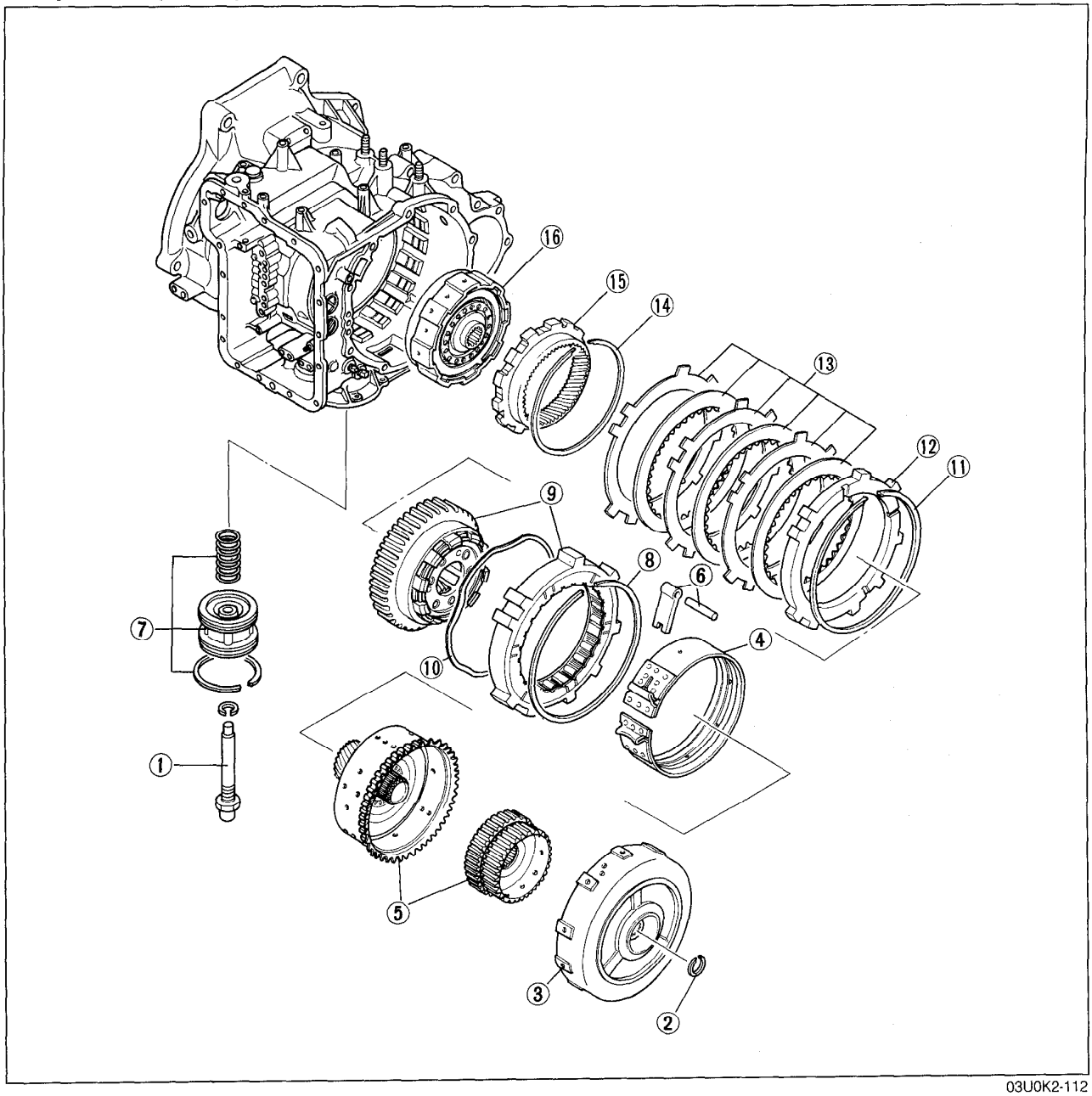

03U0K2-112

1. Piston stem
2. Snap ring
3. Clutch assembly
   Disassembly / Inspection / Assembly ..... page K2–173
4. 2-4 brake band
   Disassembly / Inspection / Assembly ..... page K2–197
5. Small sun gear and one-way clutch
   Disassembly / Inspection / Assembly ..... page K2–182
6. Anchor strut and shaft
7. Servo
   Disassembly / Inspection / Assembly ..... page K2–197
8. Snap ring
9. One-way clutch and carrier hub asembly
   Disassembly / Inspection / Assembly ..... page K2–185
10. Wave washer
11. Snap ring
12. Retaining plate
13. Low and reverse brake (Drive and driven plates)
14. Snap ring
15. Internal gear
16. 3-4 clutch assembly
    Disassembly / Inspection / Assembly ..... page K2–187

Downloaded from www.Manualslib.com manuals search engine

Components (cont'd)

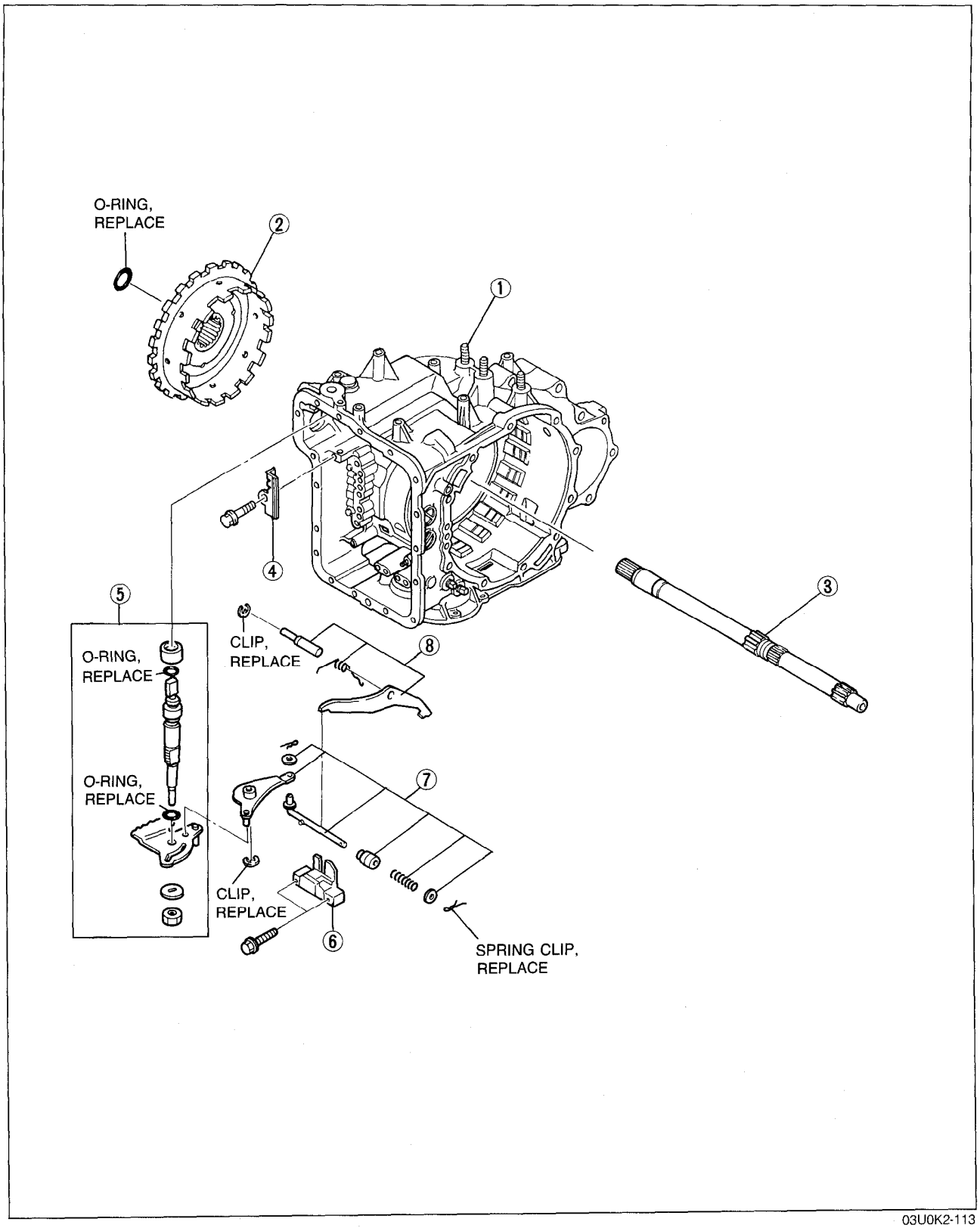

03U0K2-113

1. Transaxle case
2. Output shell
3. Turbine shaft
4. Bracket
5. Manual shaft and manual plate
6. Actuator support
7. Parking assist lever
8. Parking pawl

Downloaded from www.Manualslib.com manuals search engine

Components (cont'd)

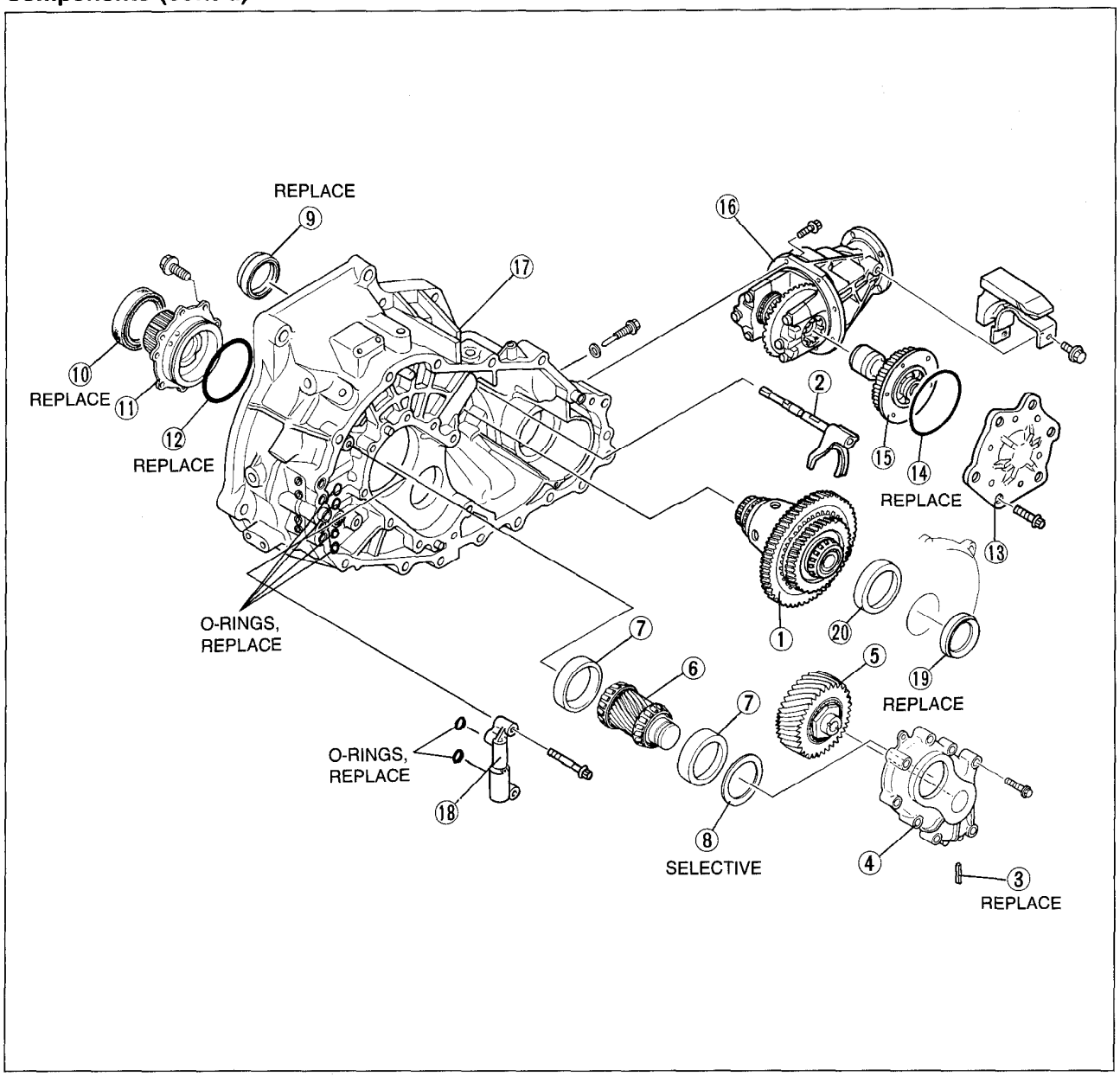

03U0K2-114

1. Front and center differential assembly
   Disassembly / Inspection / Assembly ..... page K2–239
2. Front and center differential shift fork
3. Roll pin
4. Bearing housing
5. Idler gear assembly (Transaxle)
   Disassembly / Inspection / Assembly ..... page K2–202
6. Output gear
   Disassembly / Inspection / Assembly ..... page K2–205
7. Bearing outer races
8. Adjustment shim
   Adjustment ..... page K2–252
9. Oil seal
10. Oil seal (Bearing cover)
11. Bearing cover
    Disassembly / Assembly ..... page K2–207
12. O-ring
13. Side cover
14. O-ring
15. Idler gear assembly (Transfer)
    Disassembly / Inspection / Assembly ..... page K2–237
16. Transfer carrier assembly
    Disassembly / Inspection / Assembly ..... page K2–244
17. Coverter housing
18. 2-3 accumulator
    Disassembly / Inspection / Assembly ..... page K2–200
19. Oil seal (Transaxle case)
20. Bearing outer race (Transaxle case)

Downloaded from www.Manualslib.com manuals search engine

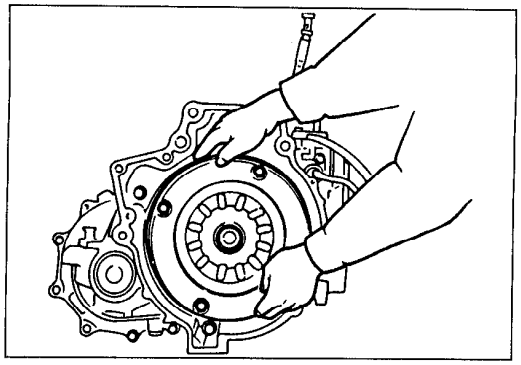

03U0KX-168

Procedure

Note

- **Do not allow the ATF to spill when removing the torque converter.**

1. Remove the torque converter from the converter housing.

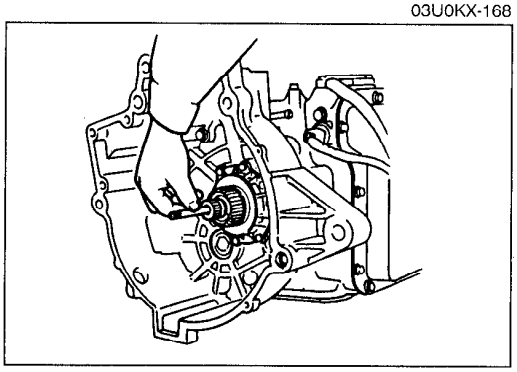

86U07B-119

2. Pull out the oil pump shaft by hand.

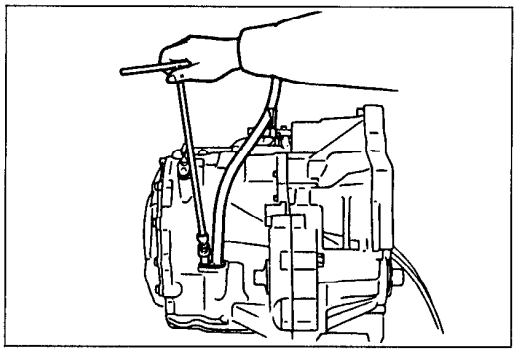

86U07B-120

3. Remove the oil level gauge and oil filler tube.

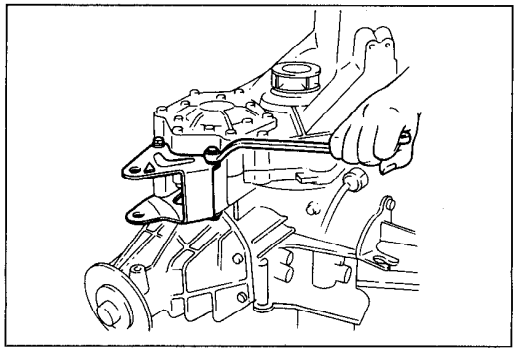

03U0K2-115

4. Remove the engine mounting bracket No.1.

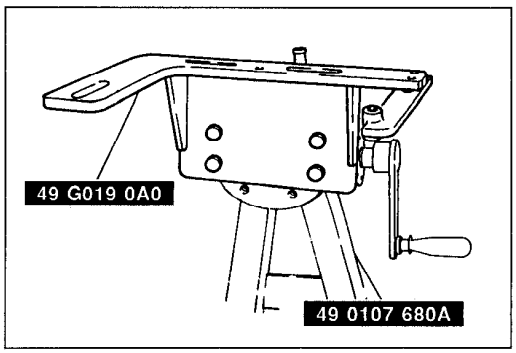

03U0K2-116

5. Assemble the **SST**.

Downloaded from www.Manualslib.com manuals search engine

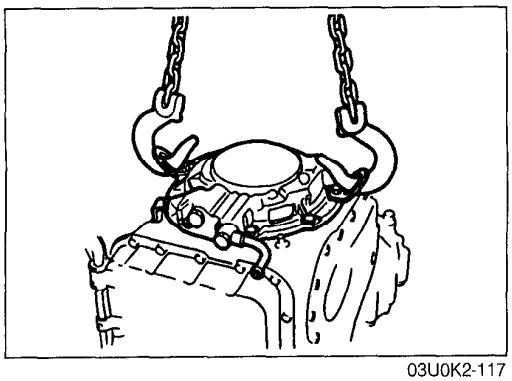

03U0K2-117

6. Attach a suitable hanger to the oil pump as shown.

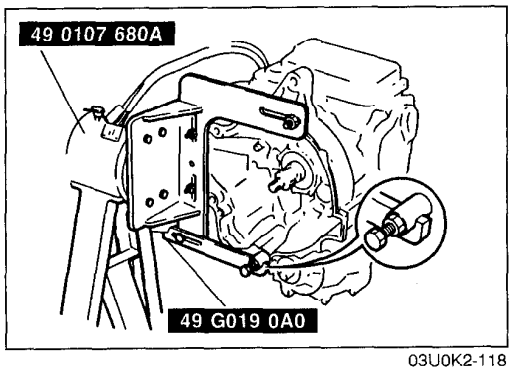

03U0K2-118

7. Lift the transaxle and mount it on the **SST**.

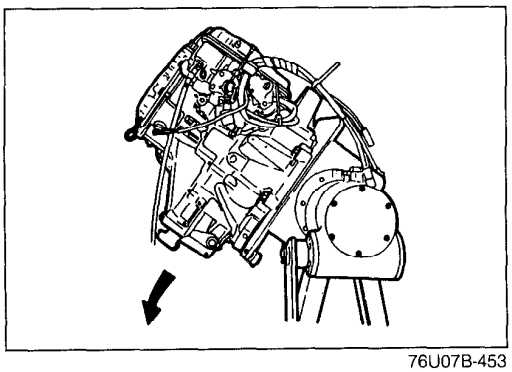

76U07B-453

Warning
- **Avoid leaning the transaxle to one side during disassembly, it may turn quickly and cause injury.**

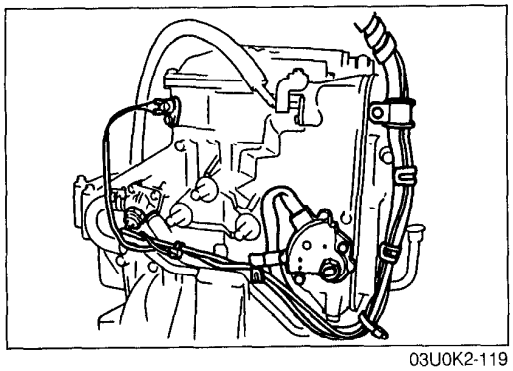

03U0K2-119

8. Remove the pulse generator, inhibitor switch and bracket.

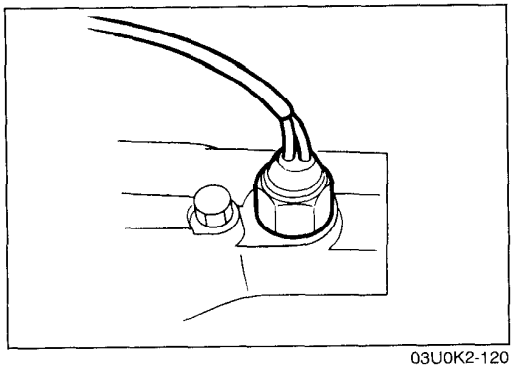

03U0K2-120

9. Remove the center differential lock switch.
10. Remove the washer.

Downloaded from www.Manualslib.com manuals search engine

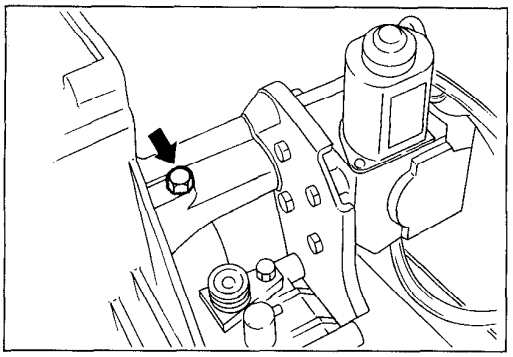

03U0K2-121

11. Remove the bolt.

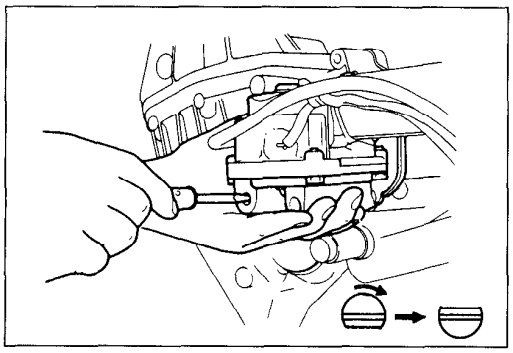

03U0K2-122

12. Turn the differential lock shift rod 180° clockwise with a screwdriver.

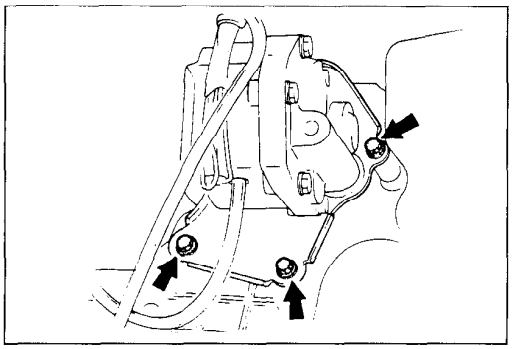

03U0K2-123

13. Remove the bolts shown in the figure.
14. Remove the differential lock assembly.

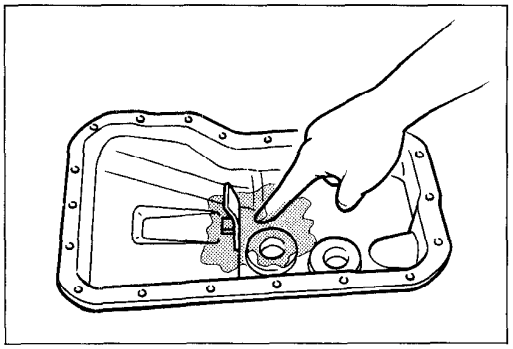

03U0K2-124

15. Remove the oil pan and gasket.
    Examine any material found in the pan or on the magnet to determine the condition of the transaxle.
    Clutch facing material..... Drive plate and brake band wear
    Steel (magnetic)..... Bearing, gear, and driven plate wear
    Aluminum (nonmagnetic).... Bushings or cast aluminum parts wear
    If large amounts of material are found, replace the torque converter and carefully check the transaxle for the cause.

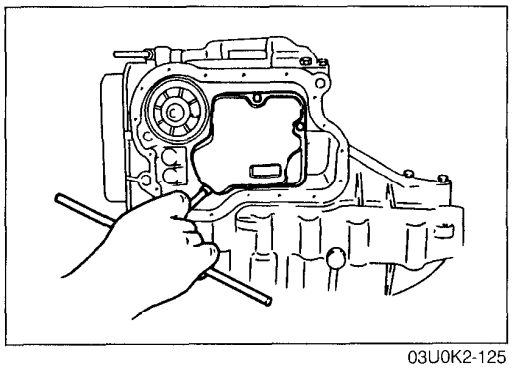

03U0K2-125

16. Remove the oilstrainer and O-ring.

Downloaded from www.Manualslib.com manuals search engine

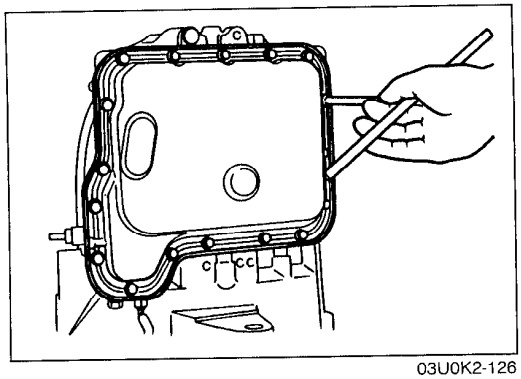

03U0K2-126

17. Remove the control valve body cover and gasket.

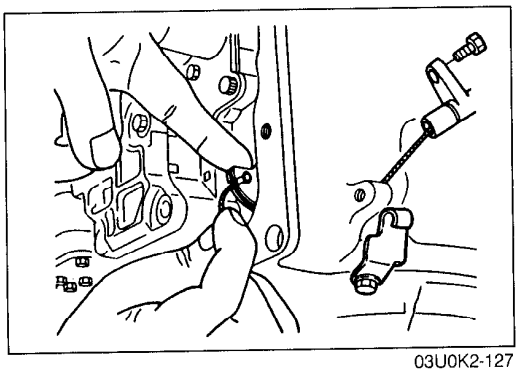

03U0K2-127

18. Remove the throttle cable.
    (1) Remove the throttle cable attaching bolt and bracket.
    (2) Remove the cable from the throttle lever of the valve body.

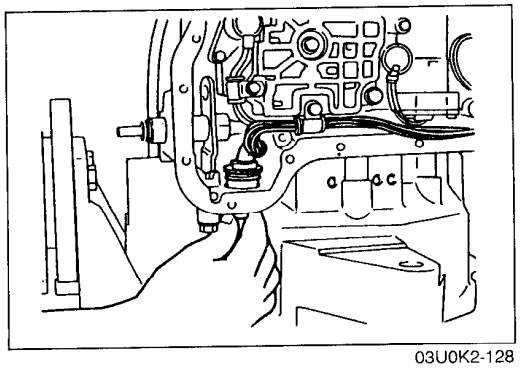

03U0K2-128

19. Pinch the tangs of the solenoid connector and remove it by pushing inward.

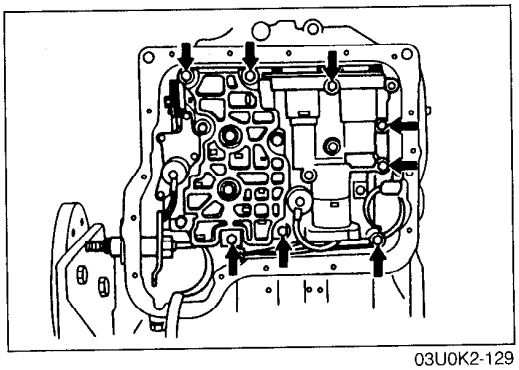

03U0K2-129

20. Remove the control valve body as an assembly.

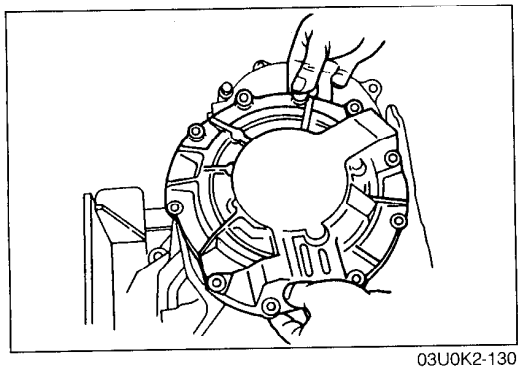

03U0K2-130

21. Remove the oil pump as an assembly.

Downloaded from www.Manualslib.com manuals search engine

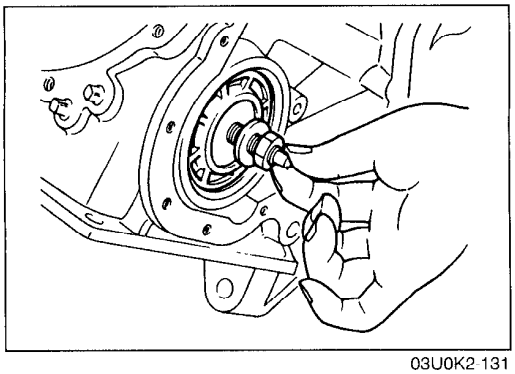

03U0K2-131

22. Remove the piston stem from the servo.

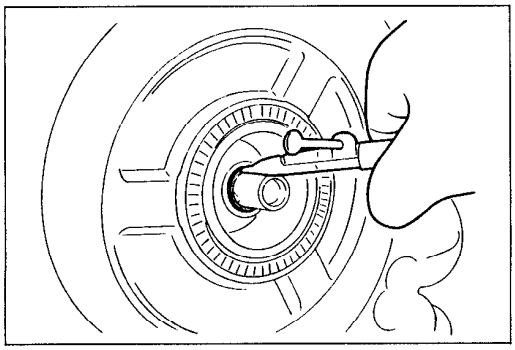

03U0K2-132

23. Remove the clutch assembly.
    (1) Remove the turbine shaft snap ring.

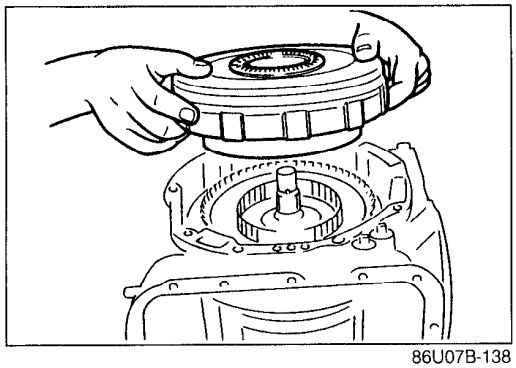

86U07B-138

(2) Pull the reverse and forward drum and remove the clutch assembly.

Note
- **Use a piece of wire to secure the brake band so that it is not damaged by being stretched.**

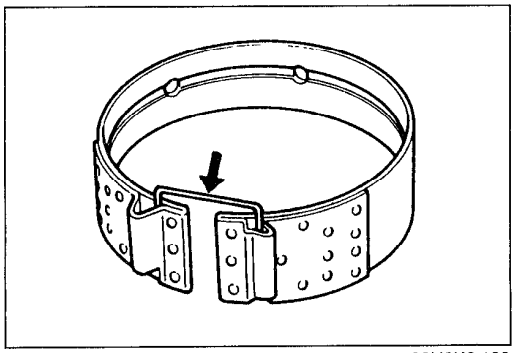

03U0K2-133

24. Remove the 2-4 brake band.

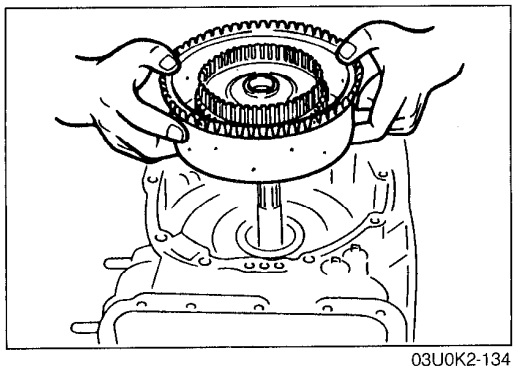

03U0K2-134

25. Remove the small sun gear and one-way clutch.

Downloaded from www.Manualslib.com manuals search engine

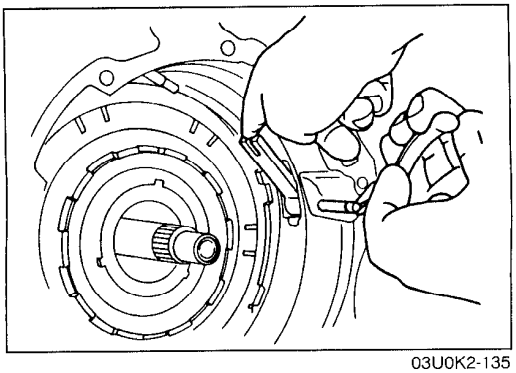

03U0K2-135

26. Pull the anchor shaft while holding the strut, then remove the strut.

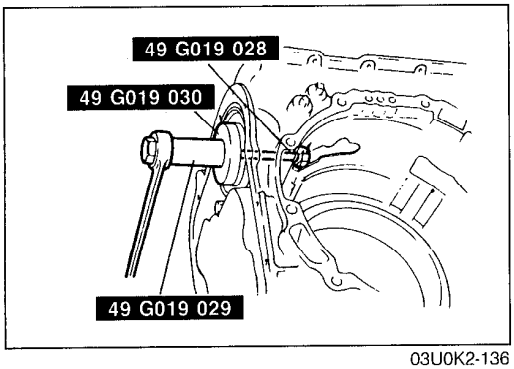

03U0K2-136

27. Remove the servo.
    (1) Remove the snap ring with the **SST**.
    (2) Remove the servo and spring.

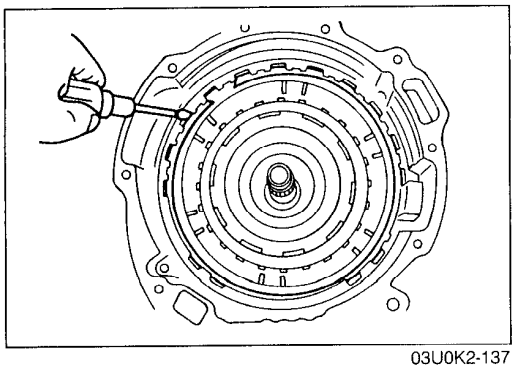

03U0K2-137

28. Remove the one-way clutch and carrier hub assembly.
    (1) Remove the snap ring.

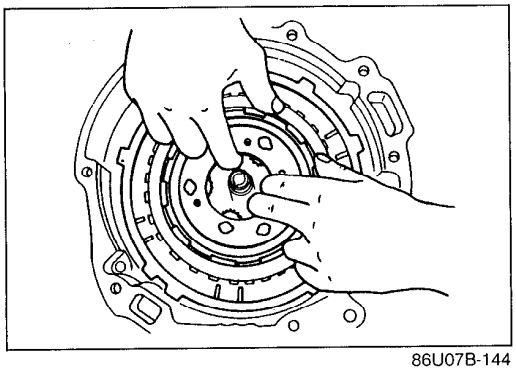

86U07B-144

    (2) Remove the one-way clutch together with the carrier hub assembly.

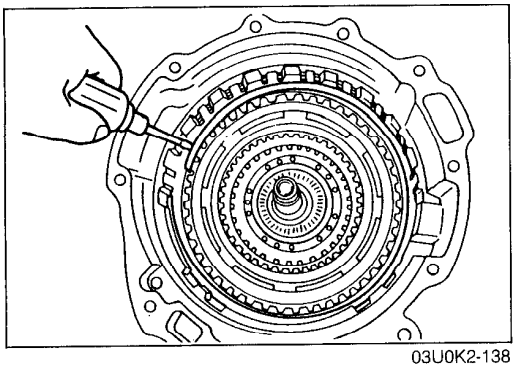

03U0K2-138

29. Remove the low and reverse brake assembly.
    (1) Remove the snap ring.

Downloaded from www.Manualslib.com manuals search engine

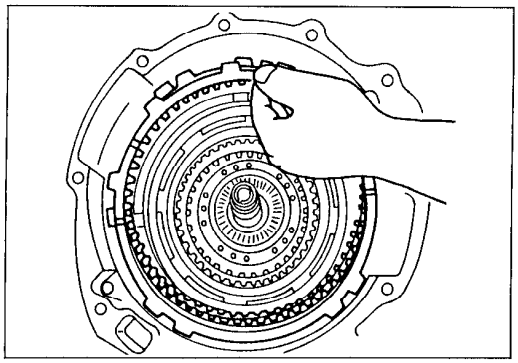

86U07B-146

(2) Remove the retaining plate and the drive and driven plates.

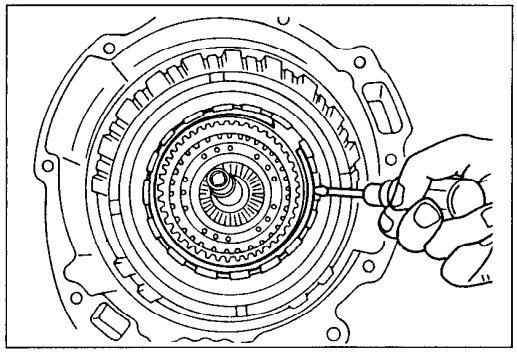

03U0K2-139

30. Remove the internal gear.
    (1) Remove the snap ring.

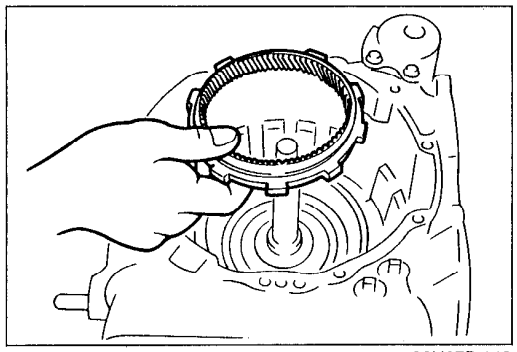

86U07B-148

(2) Remove the internal gear from the 3-4 clutch drum.

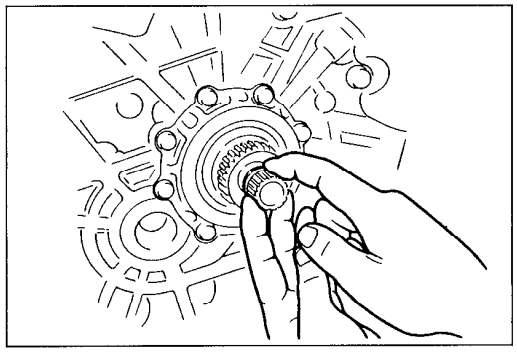

03U0K2-140

31. Remove the 3-4 clutch assembly.
    (1) Remove the O-ring from the turbine shaft at the converter housing side.

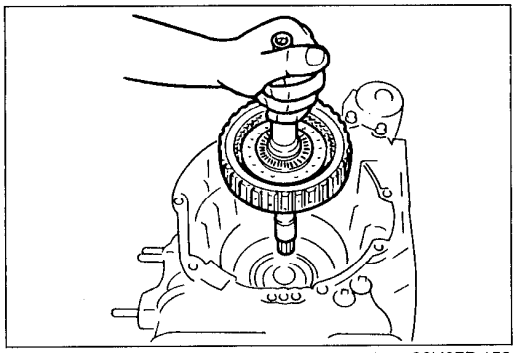

86U07B-150

(2) Pull out the turbine shaft to remove the 3-4 clutch assembly.
(3) Remove the 3-4 clutch assembly.

Downloaded from www.Manualslib.com manuals search engine

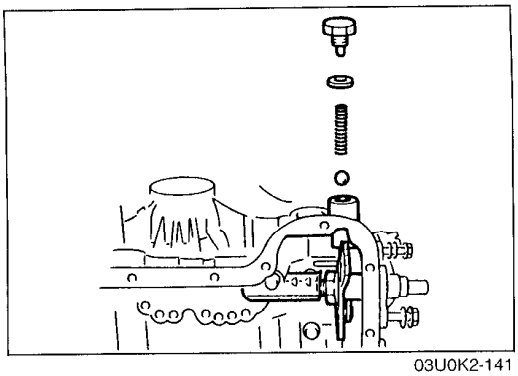

03U0K2-141

32. Remove the manual shaft and manual plate.
    (1) Remove the plug, washer, spring, and detent ball.

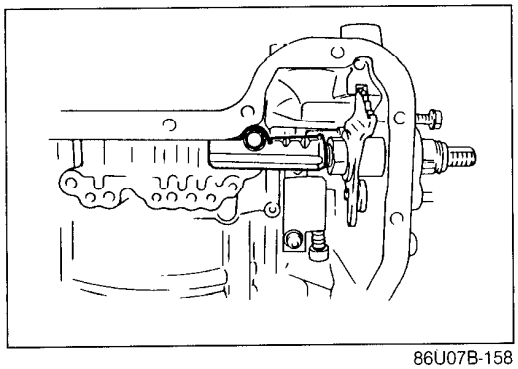

86U07B-158

(2) Remove the bracket.

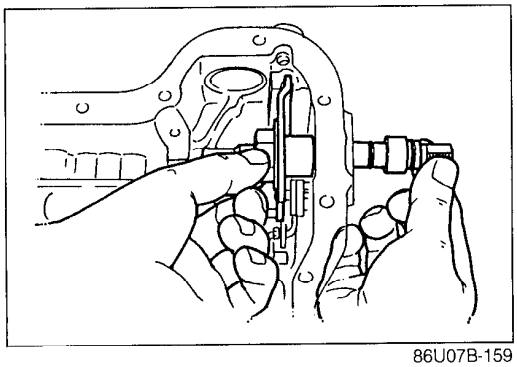

86U07B-159

(3) Loosen the nut and pull the manual shaft out.
(4) Remove the nut, washer, spacer, and manual plate.

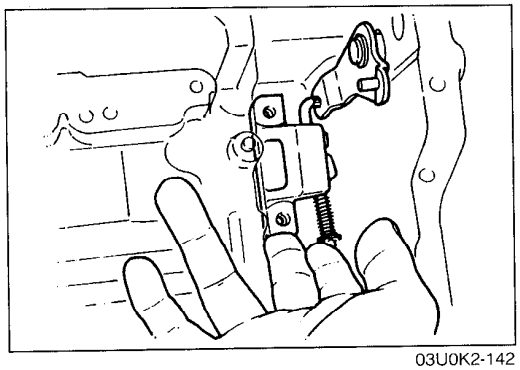

03U0K2-142

33. Remove the actuator support.

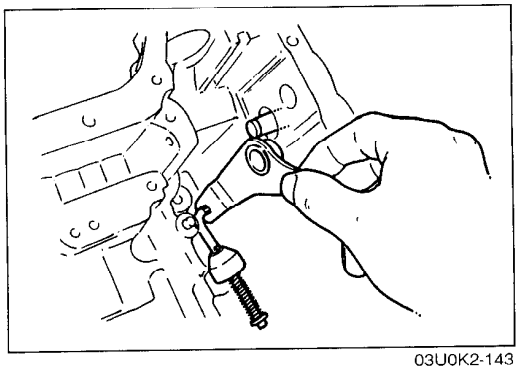

03U0K2-143

34. Remove the snap ring; then remove the parking assist lever.

Downloaded from www.Manualslib.com manuals search engine

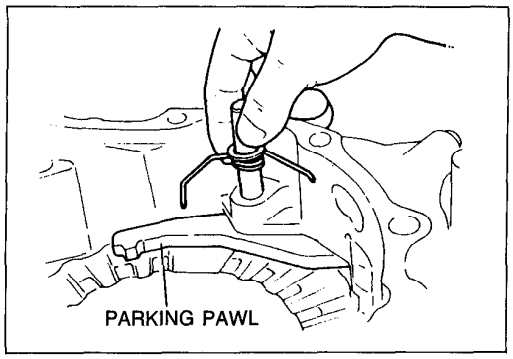

03U0K2-144

35. Remove the parking pawl.
    (1) Remove the snap ring.
    (2) Pull the parking shaft, then remove the spring and parking pawl.

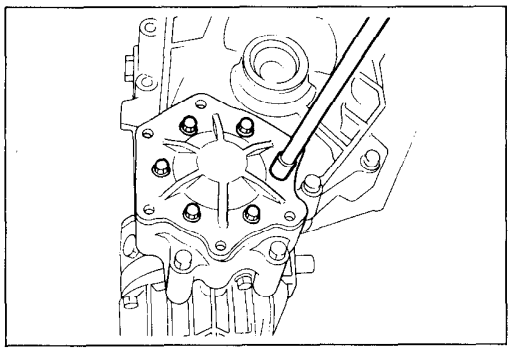

03U0K2-145

36. Remove the side cover.

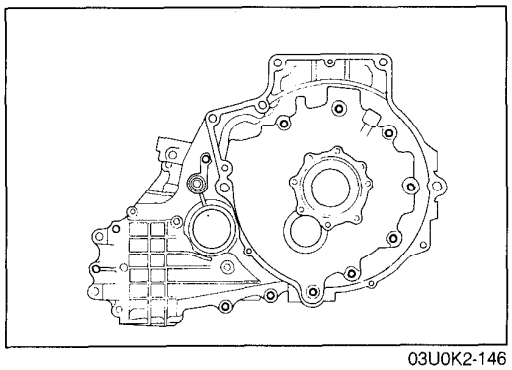

03U0K2-146

37. Remove the bolts shown in the figure.

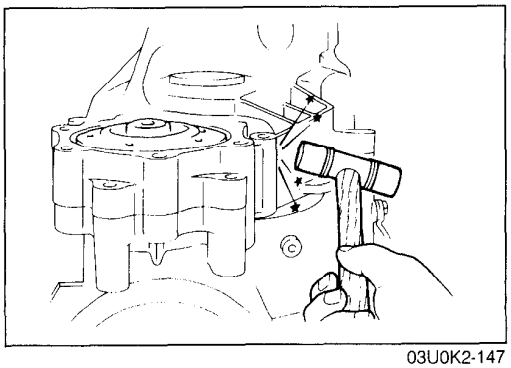

03U0K2-147

38. Remove the transaxle case by tapping lightly with a plastic hammer.

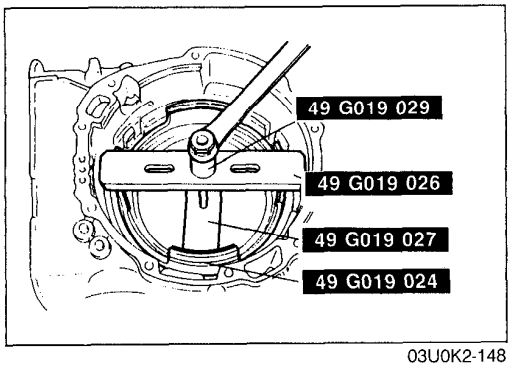

03U0K2-148

39. Remove the low and reverse brake piston
    (1) Install the **SST**.
    (2) Compress the spring and retainer assembly.

Downloaded from www.Manualslib.com manuals search engine

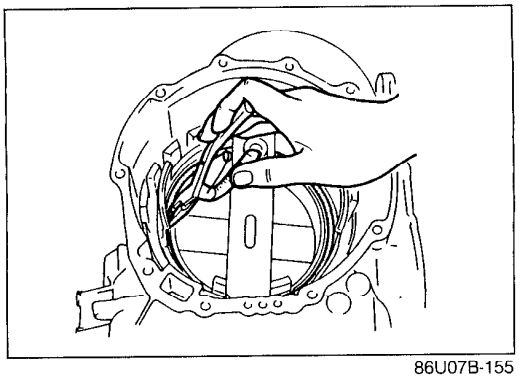

86U07B-155

(3) Remove the snap ring with snap ring pliers; then remove the spring and retainer assembly.

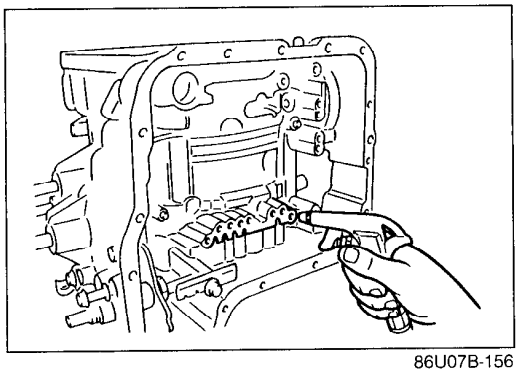

86U07B-156

(4) Remove the low and reverse brake piston by applying compressed air through the fluid passage.

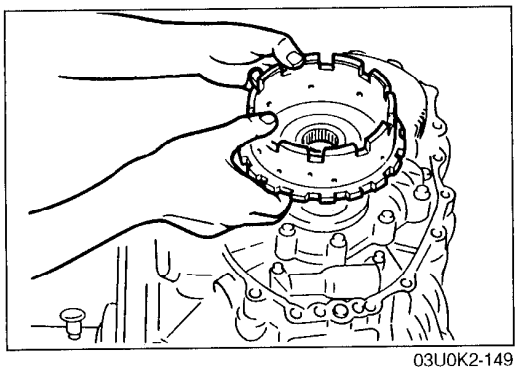

03U0K2-149

40. Remove the output shell from the output gear.

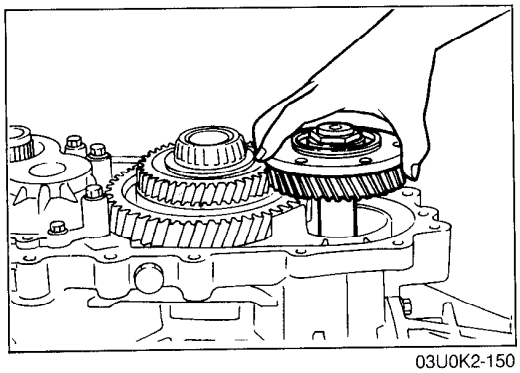

03U0K2-150

41. Remove the idle gear and O-ring.

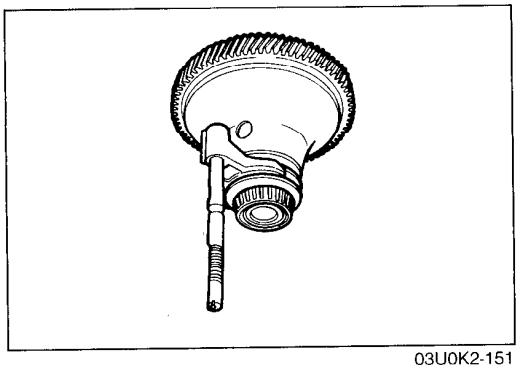

03U0K2-151

42. Remove the lockbolt shown in the figure.
43. Remove the front and center differential assembly.

Downloaded from www.Manualslib.com manuals search engine

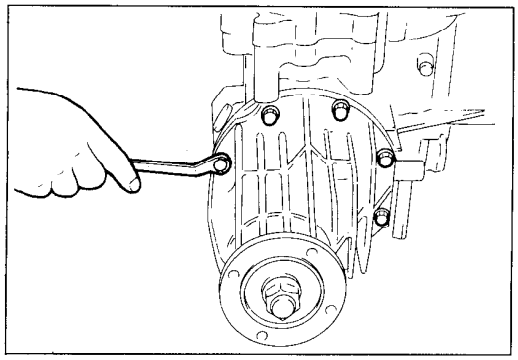

03U0K2-152

44. Remove the speedometer driven gear.
45. Remove the transfer carrier.

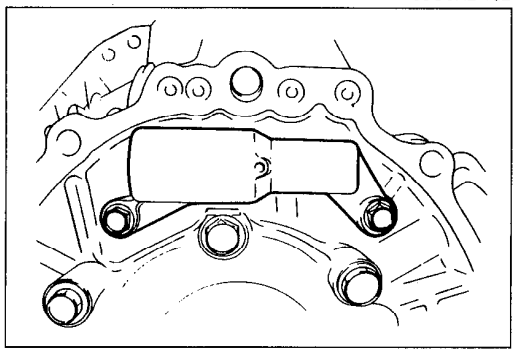

03U0K2-153

46. Remove the 2-3 accumulator piston assembly.

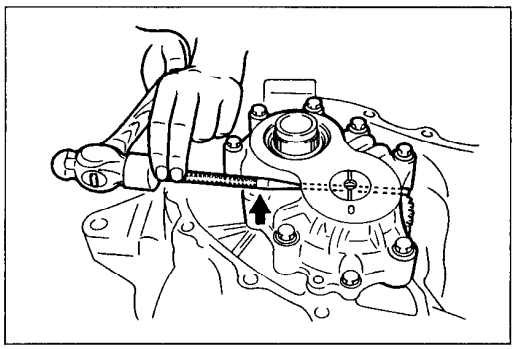

03U0K2-154

47. Remove the bearing housing.
    (1) Remove the bolt indicated in the figure.
    (2) Remove the roll pin with a pin punch.
    (3) Remove the bearing housing by tapping lightly with a plastic hammer.

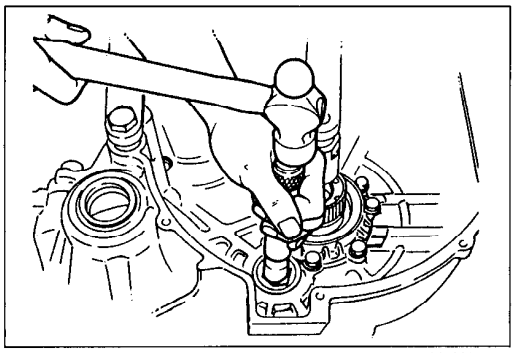

03U0K2-155

48. Remove the idle gear assembly and output gear assembly by tapping out from the torque converter side.

Caution
- **Hold the idle gear assembly with one hand so that it does not fall.**

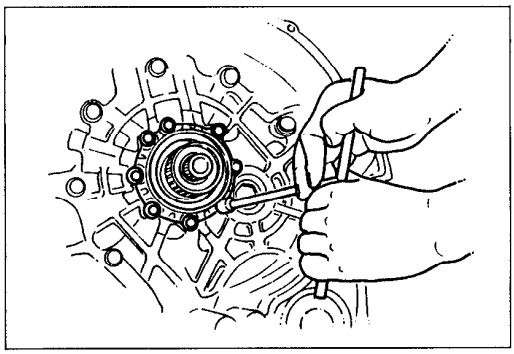

03U0K2-156

49. Remove the bearing cover.
    (1) Remove the converter housing from the transaxle hanger.
    (2) Remove the bearing cover bolts.

Downloaded from www.Manualslib.com manuals search engine

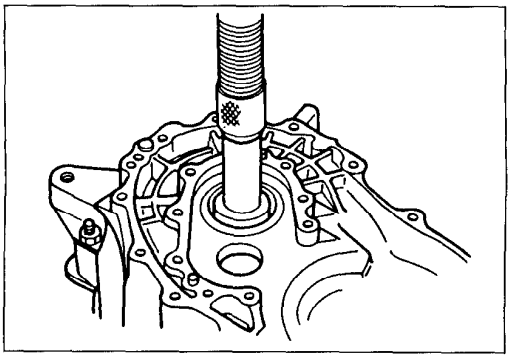

86U07B-169

(3) Press the bearing cover assembly out of the converter housing.

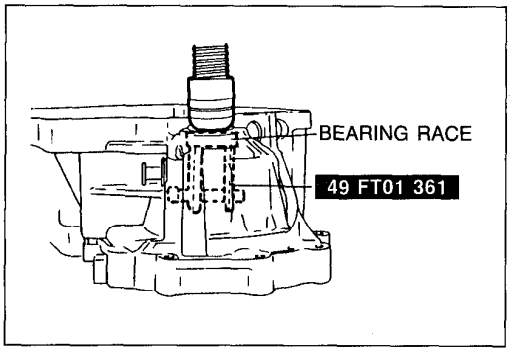

03U0K2-157

50. Remove the bearing outer race.
    (1) Press out the bearing outer races with the **SST**.

Note
- **Install the bearing outer race during reassembly to adjust the preload.**

51. Check the oil seals for damage, replace if necessary.
52. Check the O-rings for damage, replace if necessary.

TORQUE CONVERTER

The torque converter is welded together and cannot be disassembled.

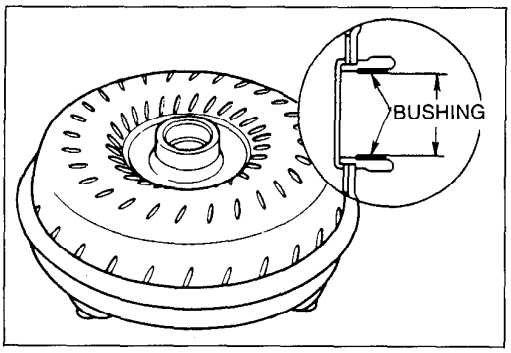

03U0KX-195

Inspection

1. Check the outer surface of the converter for damage or cracks, and replace it if necessary.
2. Check whether there is any rust on the pilot hub of the converter or on the boss. If there is any, remove it completely.
3. Measure the bushing of the converter boss. Replace the converter assembly if the bushing is worn.

Bushing inner diameter
Standard: 53.030mm (2.088 in)
Maximum: 53.075mm (2.090 in)

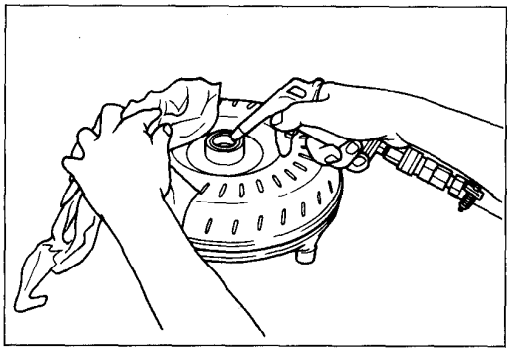

03U0KX-196

Washing inside of converter

1. Drain any ATF remaining in the converter.
2. Pour in solvent (approximately **0.5 liter [0.53 US qt, 0.44 Imp qt]**).
3. Shake the converter to clean the inside. Pour out the solvent.
4. Clean the inside of the converter with compressed air so that the inside is perfectly empty.
5. Pour in ATF.
6. Shake the converter to clean the inside. Pour out the ATF.

Downloaded from www.Manualslib.com manuals search engine

OIL PUMP

Disassembly / Inspection / Assembly

1. Disassemble in the order shown in the figure.
2. Inspect all parts and repair or replace as necessary.
3. Assemble in the reverse order of disassembly, referring to **Assembly Procedure**.

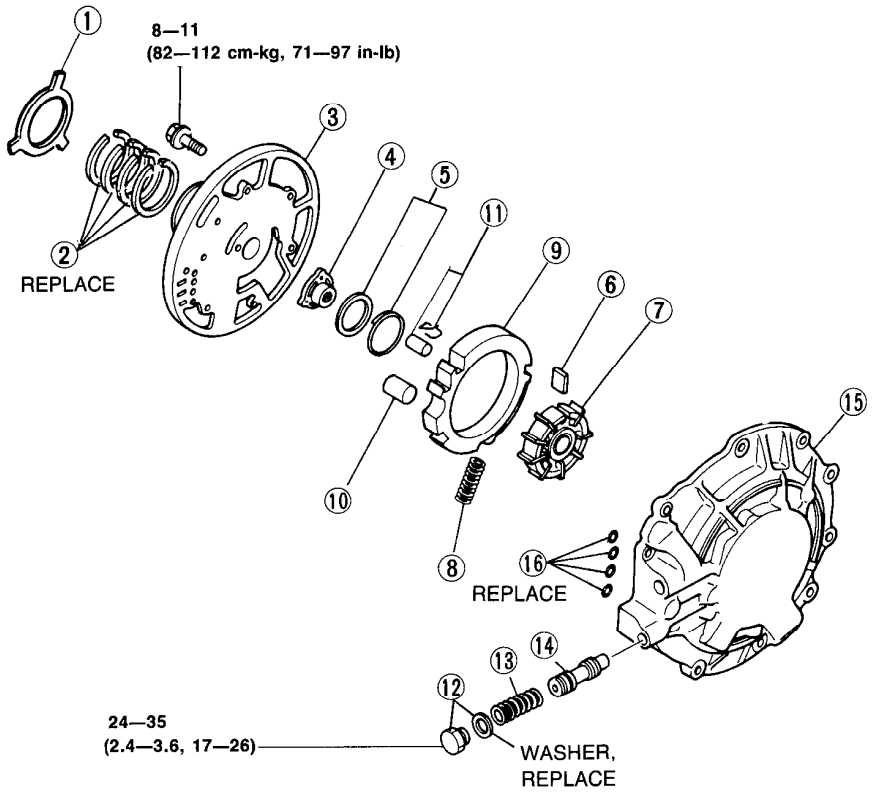

N-m (m-kg, ft-lb)

03U0K2-158

1. Bearing race
2. Seal rings
3. Oil pump cover
4. Pump flange
5. Guide ring and guide spring
6. Vane
7. Rotor
8. Spring (Come ring side)
   Inspection ..... page K2–168
9. Cam ring
10. Pivot roller
11. Seal pin and spring
12. Plug and washer
13. Spring (Valve side)
    Inspection ..... page K2–168
14. Valve
15. Oil pump body
16. O-rings

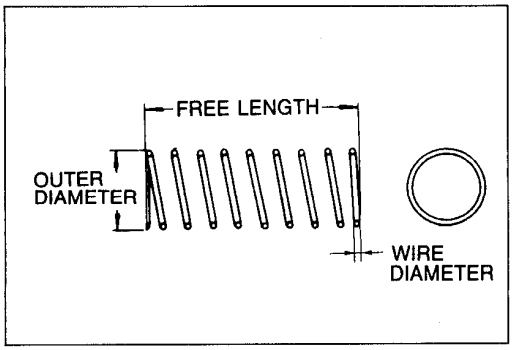

03U0K2-159

Inspection

Spring

1. Measure the spring free length.

Specification

41.6mm (1.64 in): (Can ring side)
35.0mm (1.38 in): (Valve side)

Downloaded from www.Manualslib.com manuals search engine

Clearance
Measure the clearances below; if not within specification, replace the oil pump.

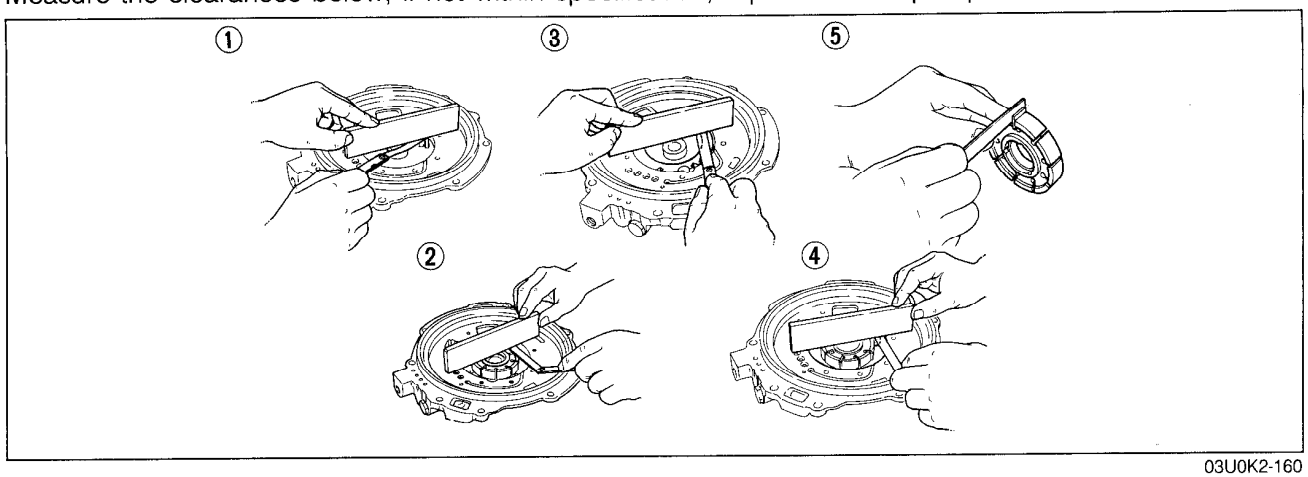

03U0K2-160

1. **Seal pin—Oil pump cover**
   Standard:
   0.005—0.020mm
   (0.0002—0.0008 in)
   Maximum:
   0.060mm (0.002 in)

2. **Rotor—Oil pump cover**
   Standard:
   0.005—0.020mm
   (0.0002—0.0008 in)
   Maximum:
   0.030mm (0.0012 in)

3. **Cam ring—Oil pump cover**
   Standard:
   0.005—0.020mm
   (0.0002—0.0008 in)
   Maximum:
   0.080mm (0.003 in)

4. **Vane—Oil pump cover**
   Standard:
   0.015—0.050mm
   (0.0006—0.0020 in)
   Maximum:
   0.080mm (0.003 in)

5. **Vane—Rotor groove**
   Standard:
   0.010—0.045mm
   (0.0004—0.0018 in)
   Maximum:
   0.065mm (0.0026 in)

Wear limit
Check each part for wear; if not within specification, replace the oil pump.

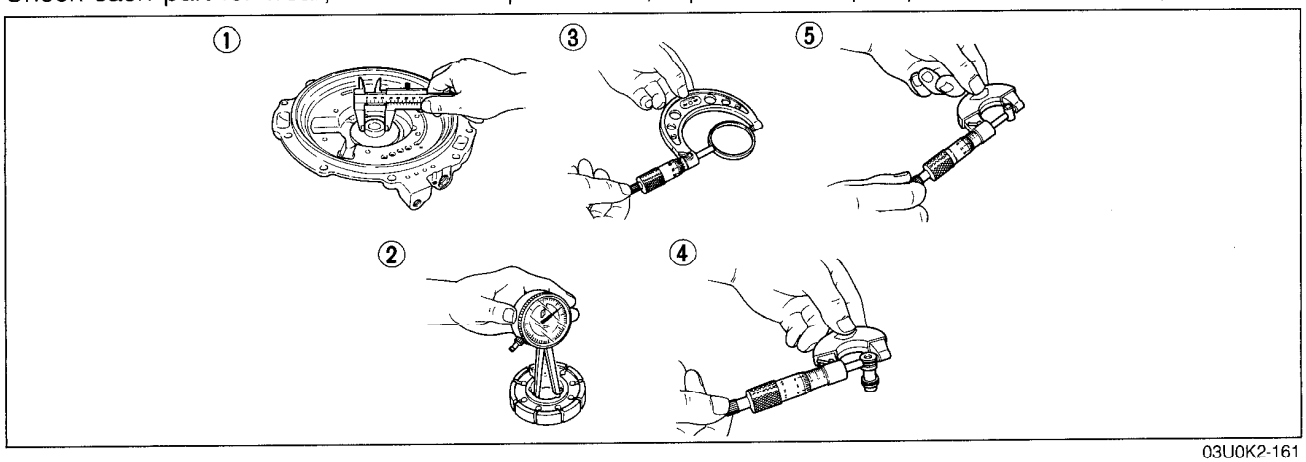

03U0K2-161

1. **Oil pump body sleeve ..... outer diameter**
   Standard: 28.00mm (1.102 in)

2. **Rotor bushing ..... inner diameter**
   Standard: 28.00mm (1.102 in)
   Maximum: 28.05mm (1.104 in)

3. **Guide ring..... outer diameter**
   Standard: 57.85mm (2.278 in)
   Minimum: 57.70mm (2.272 in)

4. **Valve ..... outer diameter**
   Standard: 12.00mm (0.472 in)
   Minimum: 11.86mm (0.467 in)

5. **Seal pin ..... outer diameter**
   Standard: 5.00mm (0.197 in)
   Minimum: 4.90mm (0.193 in)

Downloaded from www.Manualslib.com manuals search engine

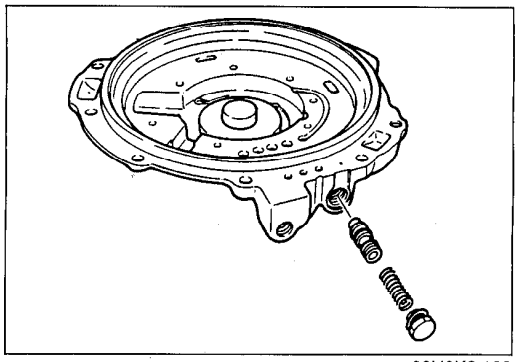

03U0K2-162

Assembly procedure

1. Install the valve and spring into the oil pump body, and check that the valve moves smoothly.
2. Install the plug.

Tightening torque:
24—35 N·m (2.4—3.6 m-kg, 17—26 ft-lb)

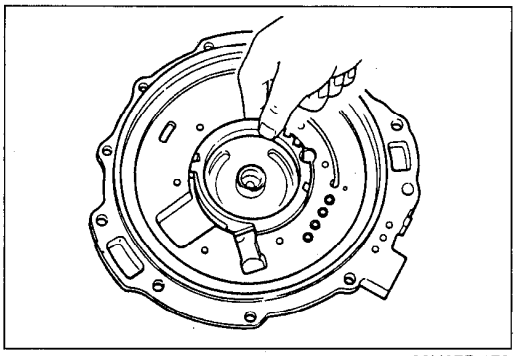

86U07B-179

3. Install the cam ring and pivot roller onto the oil pump body.

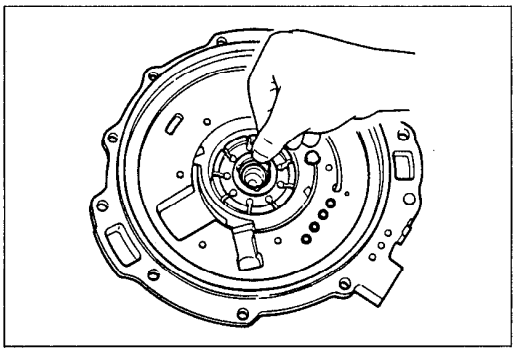

86U07B-180

4. Install the rotor onto the oil pump body.

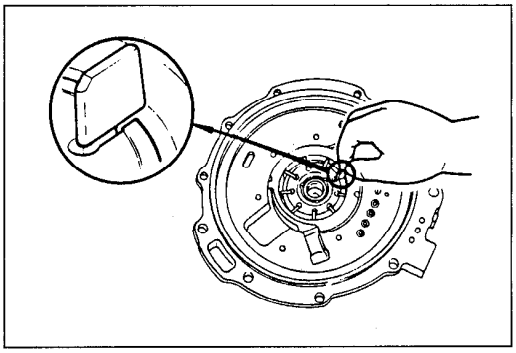

86U07B-181

5. Install the vanes into the rotor as shown.

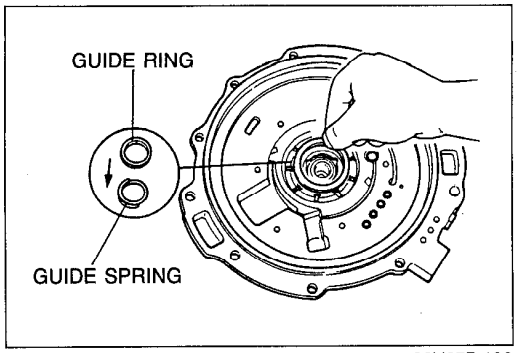

86U07B-182

6. Install the guide spring and guide ring while expanding the vanes toward the cam ring.

Downloaded from www.Manualslib.com manuals search engine

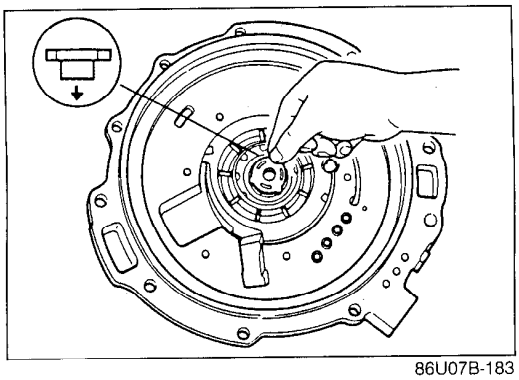

86U07B-183

7. Install the pump flange onto the rotor.

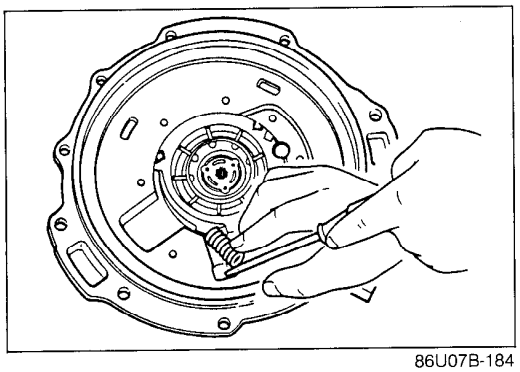

86U07B-184

8. Install the spring between the cam ring and oil pump body.

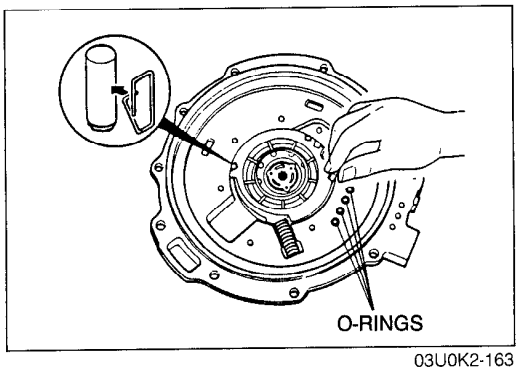

03U0K2-163

Note
- **Install the seal pins round end first.**

9. Install the seal pins and springs with the pins facing toward the oil pump body.
10. Install the new O-rings.

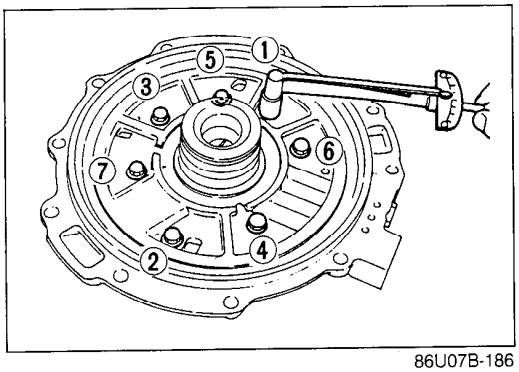

86U07B-186

11. Install the oil pump cover to the oil pump body. Tighten the bolts in sequence.

Tightening torque:
8—11 N·m (82—112 cm-kg, 71—97 in-lb)

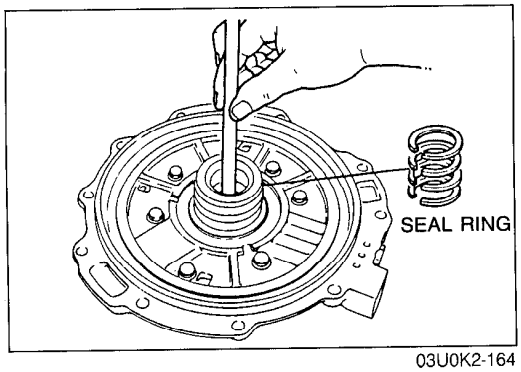

03U0K2-164

12. Install the oil pump shaft and check for smooth oil pump operation.
13. Install the new seal rings.

Downloaded from www.Manualslib.com manuals search engine

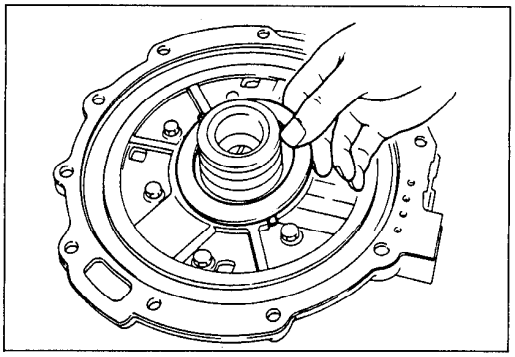

86U07B-188

14. Apply petroleum jelly to the bearing race to secure it to the oil pump cover; then install it on the oil pump cover.

Bearing race outer diameter: 88.0mm (3.46 in)

Downloaded from www.Manualslib.com manuals search engine

CLUTCH ASSEMBLY
Preparation
SST

49 G019 0A7A Compressor set, return spring	For disassembly/ assembly of clutch assembly	49 G019 025 Body B (Part of 49 G019 0A7)	For disassembly/ assembly of clutch assembly
49 G019 026 Plate (Part of 49 G019 0A7)	For disassembly/ assembly of clutch assembly	49 G019 027 Attachment A (Part of 49 G019 0A7)	For disassembly/ assembly of clutch assembly
49 G019 029 Nut (Part of 49 G019 0A7)	For disassembly/ assembly of clutch assembly	49 G019 024 Body (Part of 49 G019 0A7)	For disassembly/ assembly of clutch assembly

03U0K2-165

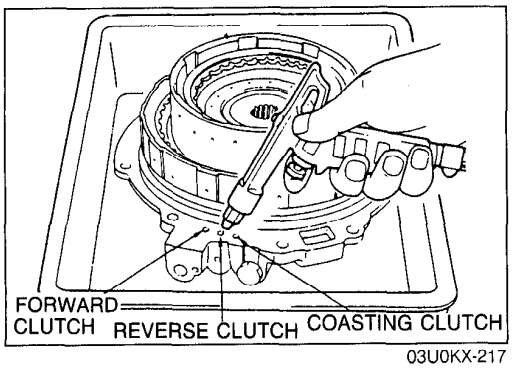

03U0KX-217

Preinspection
Clutch operation

1. Set the clutch assembly onto the oil pump.
2. Check the clutch operation by applying compressed air through the fluid passages shown.

Applied air pressure: 392 kPa (4.0 kg/cm^2, 57 psi)

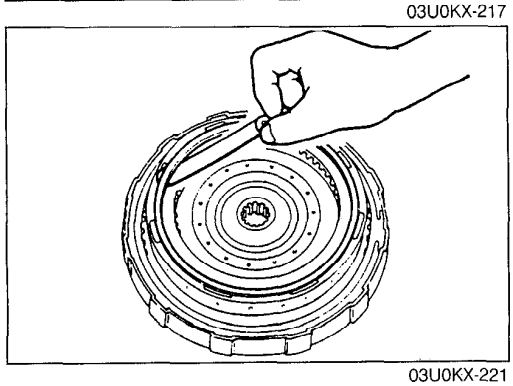

03U0KX-221

Forward clutch

1. Measure the clearance between the retaining plate and the snapring.

Clearance: 1.0—1.2mm (0.040—0.047 in)

2. If not as specified, replace parts as necessary.
3. Select and install the correct snap ring when assembling.

Downloaded from www.Manualslib.com manuals search engine

Disassembly / Inspection / Assembly

1. Disassembly in the order shown in the figure, referring to **Disassembly Note**.
2. Inspect all parts and repair or replace as necessary.
3. Assemble in the reverse order of disassembly, referring to **Assembly Procedure**.

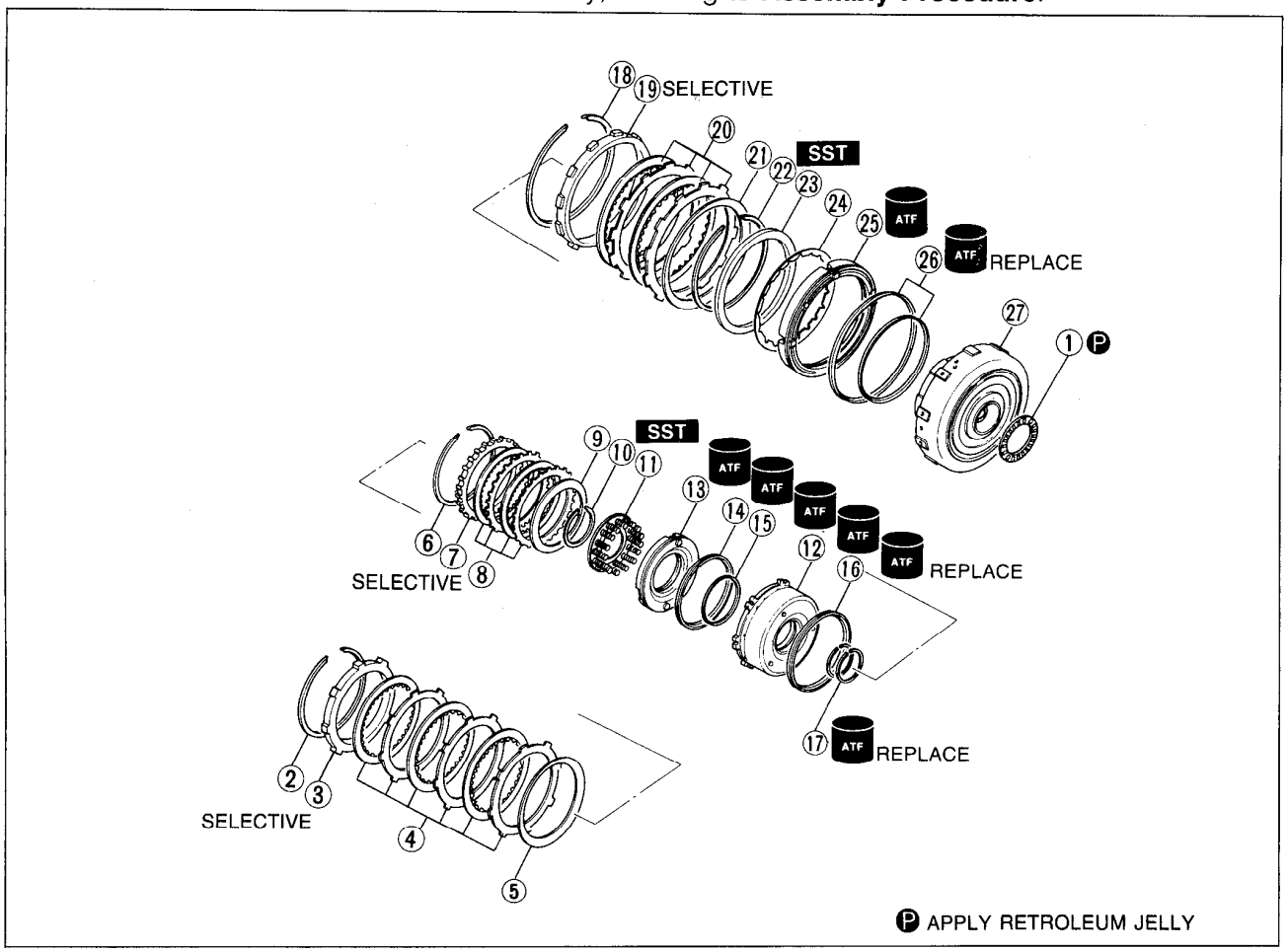

03U0K2-166

—Forward clutch—

1. Thrust bearings
   Inspect for damage and rough rotation
2. Snap ring
3. Retaining plate
4. Drive and driven plate
   Inspect for wear and burning
   Inspection ..... page K2–176
5. Dished plate

—Coasting clutch—

6. Snap ring
7. Retaining plate
8. Drive and driven plate
   Inspect for wear and burning
   Inspection ..... page K2–176
9. Dished plate
10. Snap ring
    Disassembly note ..... page K2–176
11. Spring and retainer assembly
    Inspection ..... page K2–175
12. Coasting clutch drum
    Disassembly note ..... page K2–175
    Inspection ..... page K2–176
13. Coasting piston
    Disassembly note ..... page K2–175
    Inspection ..... page K2–177
14. Outer seal
15. Inner seal
16. Outer seal
17. Seal ring

—Reverse clutch—

18. Snap ring
19. Retaining plate
20. Drive and driven plate
    Inspect for wear and burning
    Inspection ..... page K2–176
21. Dished plate
22. Snap ring
    Disassembly note ..... page K2–175
23. Return spring stop
24. Piston return spring
25. Reverse piston
    Disassembly note ..... page K2–176
26. Seal rings (Inner and outer)
27. Reverse and forward drum
    Inspection ..... page K2–177

Downloaded from www.Manualslib.com manuals search engine

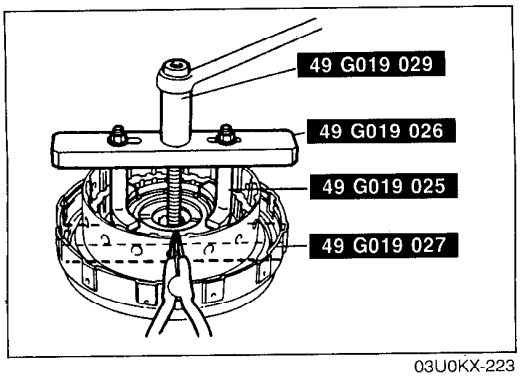

03U0KX-223

Disassembly note

Snap ring (coasting clutch)

1. Install the **SST** in the coasting clutch drum as shown.
2. Compress the spring and retainer assembly.
3. Remove the snap ring.
4. Remove the **SST**, then remove the spring and retainer assembly.

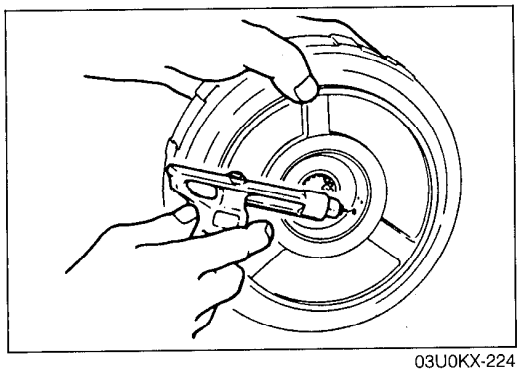
03U0KX-224

Coasting clutch drum

1. Remove the coasting clutch drum from the reverse and forward drum by applying compressed air through the fluid passage.

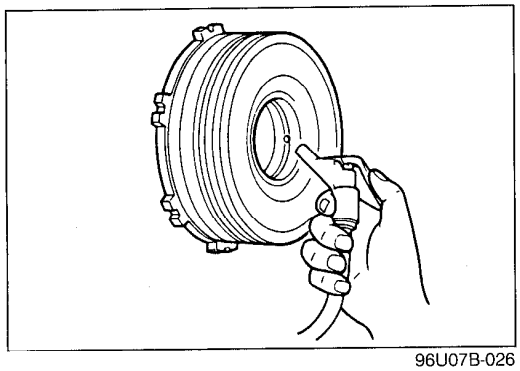
96U07B-026

Coasting piston

1. Remove the coasting clutch piston from the coasting clutch drum by applying compressed air through the fluid passage.

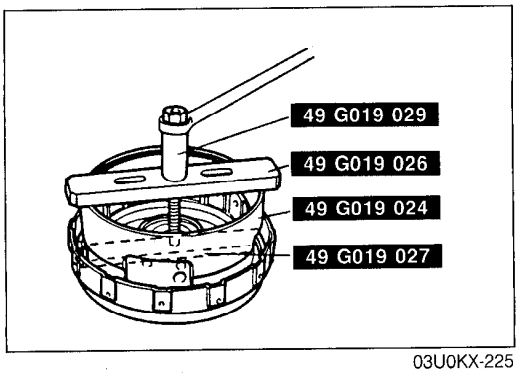

03U0KX-225

Snap ring (reverse clutch)

1. Install the **SST** in the reverse and forward drum as shown.
2. Compress the piston return spring.

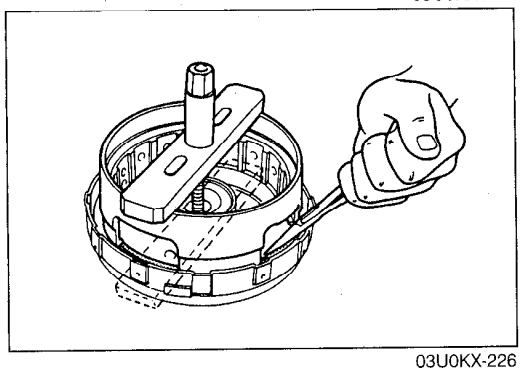
03U0KX-226

3. Remove one end of the snap ring from the groove with snap-ring pliers.

Downloaded from www.Manualslib.com manuals search engine

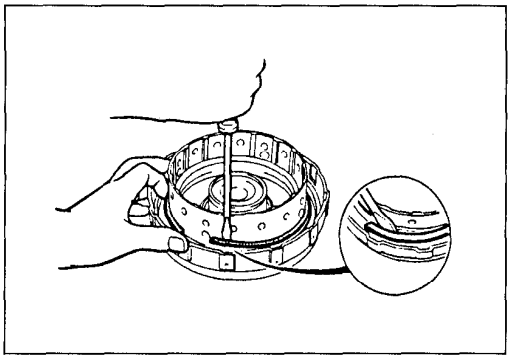

86U07B-195

4. Remove the **SST** from the reverse and forward drum.
5. Remove the snap ring with a screwdriver.

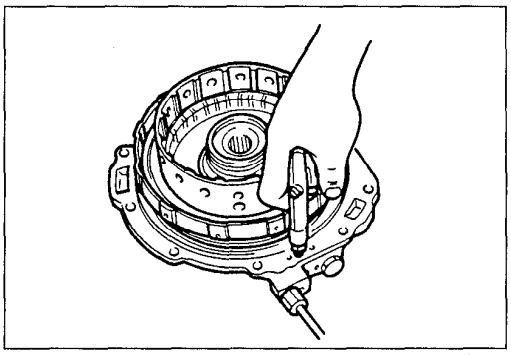

03U0KX-227

Reverse piston

1. Place the reverse and forward drum on the oil pump.
2. Remove the reverse piston by applying compressed air through the fluid passage.

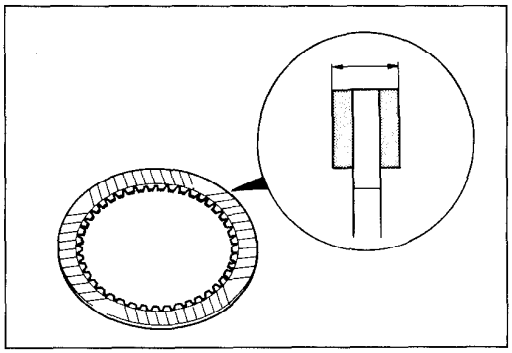

03U0KX-228

Inspection

Drive plates

1. Measure the facing thickness in three places, and determine the average of the three readings.

   Standard: 1.6mm (0.063 in)
   Minimum: 1.4mm (0.055 in)

2. If not within specification, replace the drive plates.

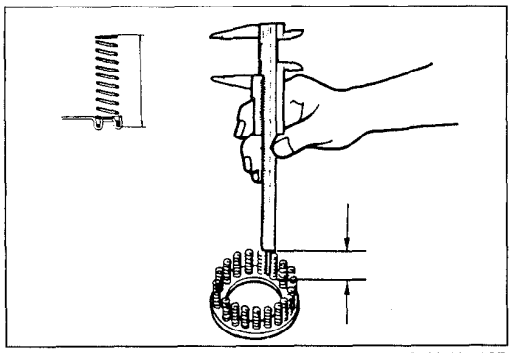

03U0K2-167

Spring and retainer assembly (coasting clutch)

1. Measure the spring free length and check for deformation.

   Free length: 29.80mm (1.173 in)

2. If not within specification, replace the spring and retainer assembly.

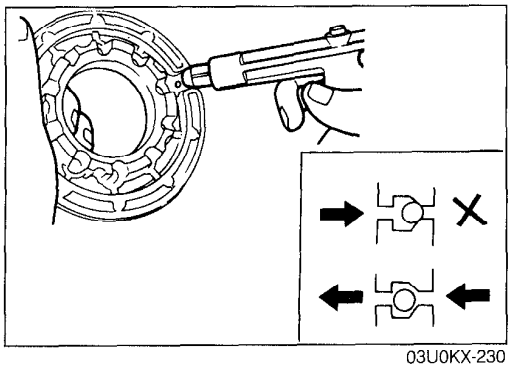

03U0KX-230

Coasting clutch drum

1. Verify that there is no air leakage when applying compressed air through the oil hole opposite the return spring.
2. Verify that there is air flow when applying compressed air through the oil hole on the return spring side.

   Air pressure: 392 kPa (4.0 kg/cm^2, 57 psi) max.

Downloaded from www.Manualslib.com manuals search engine

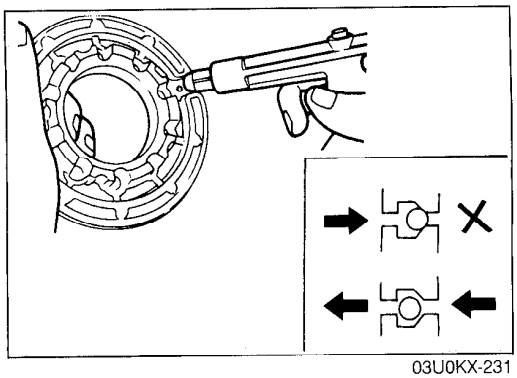

03U0KX-231

Coasting piston

1. Verify that there is no air leakage when applying compressed air through the oil hole opposite the return spring.
2. Verify that there is air flow when applying compressed air through the oil hole on the return spring side.

Air pressure: 392 kPa (4.0 kg/cm^2, 57 psi) max.

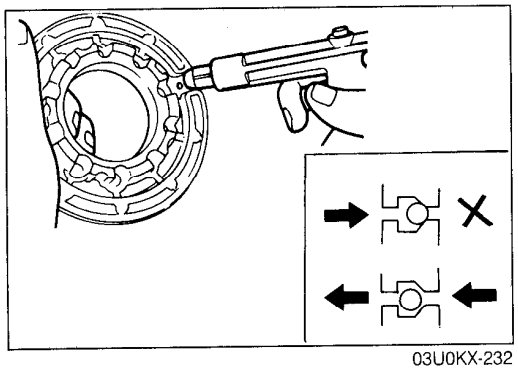

03U0KX-232

Reverse and forward drum

1. Verify that there is no air leakage when applying compressed air through the oil hole opposite the return spring.
2. Verify that there is air flow when applying compressed air through the oil hole on the return spring side.

Air pressure: 392 kPa (4.0 kg/cm^2, 57 psi) max.

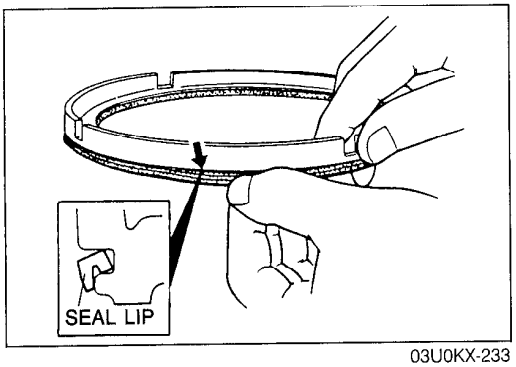

03U0KX-233

Assembly procedure

Reverse clutch

1. Install the reverse piston.
   (1) Apply ATF to inner and outer faces of the seals, and install them to the reverse piston.
   (2) Face the outer seal lip toward the inside by gently rolling it down around the circumference for easier installation into the reverse clutch drum.

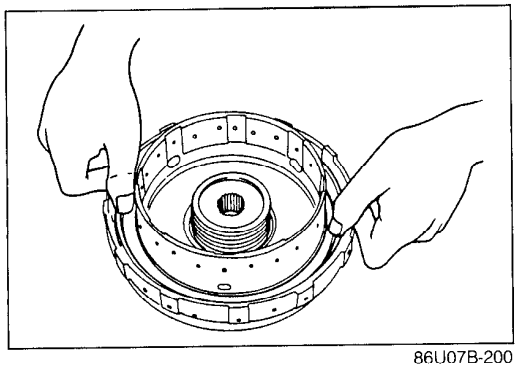

86U07B-200

   (3) Install the reverse piston by pushing evenly around the circumference, being careful not to damage the seal rings.

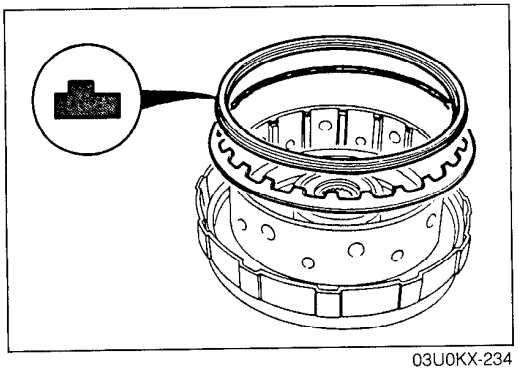

03U0KX-234

2. Install the piston return spring with the tabs facing away from the reverse piston.
3. Install the return spring stop with the step facing upward.

Downloaded from www.Manualslib.com manuals search engine

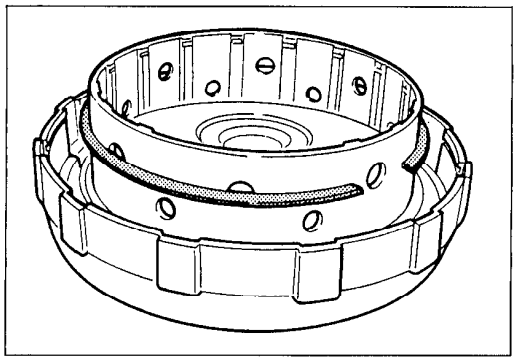

86U07B-202

4. Install the snap ring half-way down the reverse forward drum as shown.

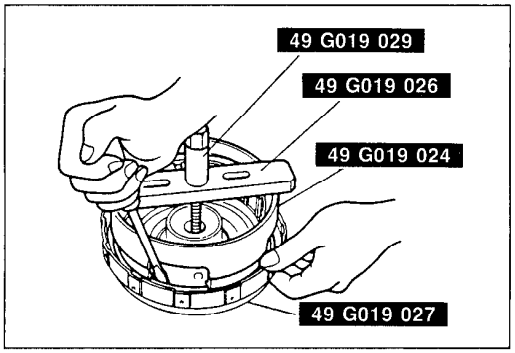

86U07B-203

5. Install the **SST** on the reverse and forward drum.
6. Compress the spring and retainer assembly.
7. Install the snap ring with a screwdriver.
8. Remove the **SST**.

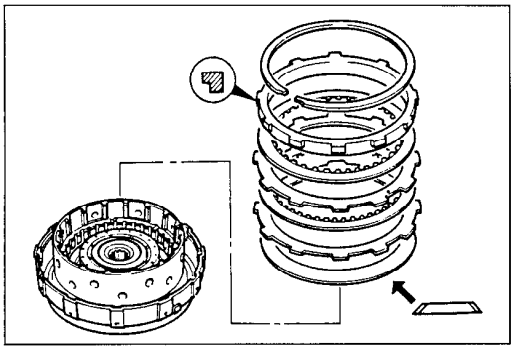

03U0KX-235

9. Install the dished plate with the dished side facing the piston as shown.
10. Install the drive and driven plates.

Note
- **Installation order: Driven-Drive-Driven-Drive**

11. Install the retaining plate.
12. Install the snap ring.

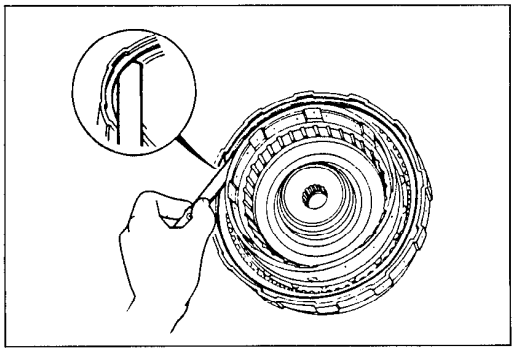

03U0K2-168

13. Measure the reverse clutch clearance.
    (1) Measure the clearance between the snap ring and the retaining plate of the reverse clutch.
    (2) If the clearance is not within specification, adjust it by selecting a proper retaining plate.

Reverse clutch clearance:
0.9—1.1mm (0.035—0.043 in)

Retaining plate size

mm (in)

6.5 (0.2559)	6.6 (0.2598)	6.7 (0.2638)
6.8 (0.2677)	6.9 (0.2717)	7.0 (0.2756)
7.1 (0.2795)	7.2 (0.2835)	7.3 (0.2874)
7.4 (0.2913)	7.5 (0.2953)	7.6 (0.2992)
7.7 (0.3031)	7.8 (0.3071)	8.0 (0.3150)

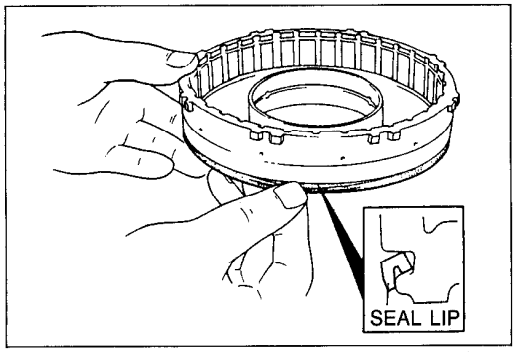

86U07B-206

Coasting clutch

1. Install the coasting clutch drum.
    (1) Apply ATF to inner and outer faces of the seal, and install it onto the coasting clutch drum.
    (2) Face the outer seal lip toward the inside by gently rolling it down around the circumference for easier installation into the drum.

Downloaded from www.Manualslib.com manuals search engine

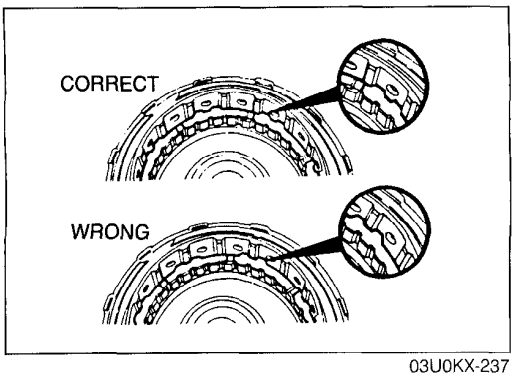

03U0KX-237

(3) Install the coasting clutch drum in the correct position in the reverse and forward drum as shown.
(4) Push evenly around the circumference, being careful not to damage the outer seal.

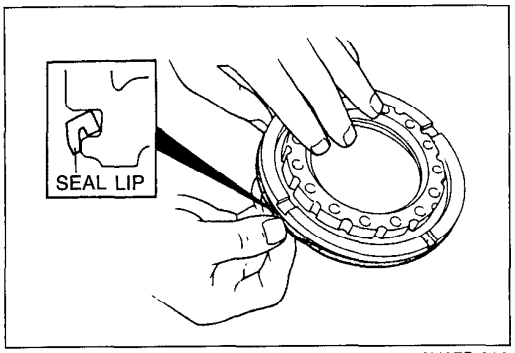

86U07B-208

2. Install the coasting piston.
   (1) Apply ATF to inner and outer faces of the seals and install them onto the coasting piston.
   (2) Face the outer seal lip toward the inside by gently rolling it down around the circumference for easier installation into the drum.

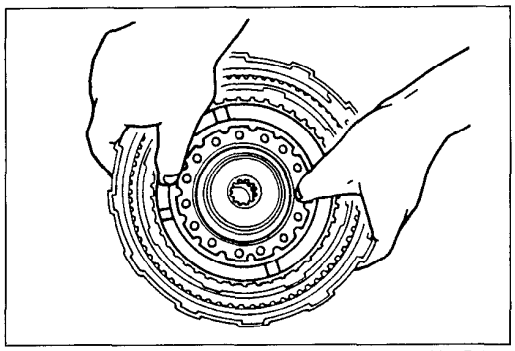

86U07B-209

(3) Install the coasting piston by pushing evenly around the circumference, being careful not to damage the outer seal.

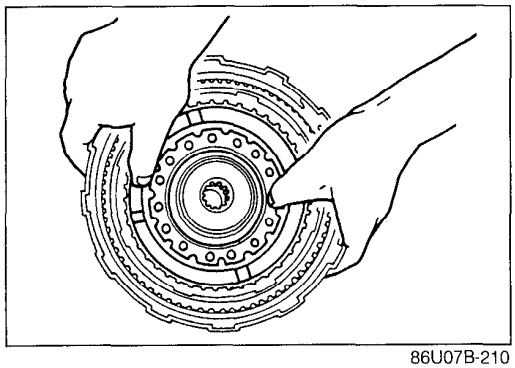

86U07B-210

3. Install the spring and retainer assembly.

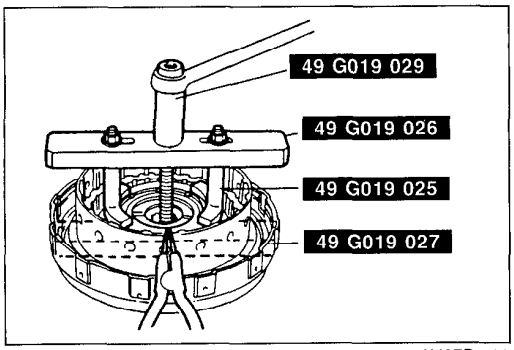

86U07B-211

4. Install the **SST** in the coasting clutch as shown.
5. Compress the spring and retainer assembly.
6. Install the snap ring.
7. Remove the **SST**.

Downloaded from www.Manualslib.com manuals search engine

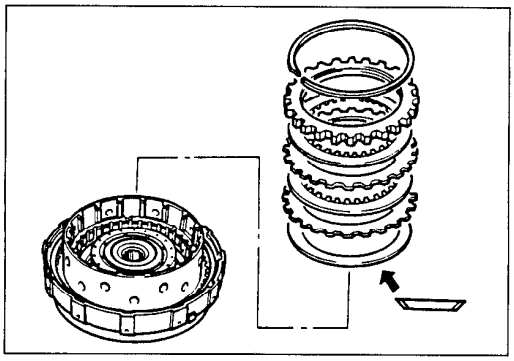

03U0KX-238

8. Install the dished plate with the dished side downward.

Note
- **Installation order: Driven-Drive-Driven-Drive**

9. Install the drive and driven plates.
10. Install the retaining plate.
11. Install the snap ring.

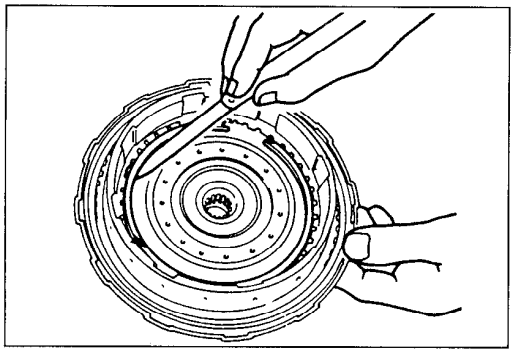

03U0K2-169

12. Measure the coasting clutch clearance.
    (1) Measure the clearance between the snap ring and the retaining plate of the coasting clutch.
    (2) If the clearance is not within specification, adjust it by selecting a proper retaining plate.

Coasting clutch clearance:
1.0—1.2mm (0.040—0.047 in)

Retaining plate sizes

mm (in)

4.6 (0.1811)	4.8 (0.1890)	5.0 (0.1969)
5.2 (0.2047)	5.4 (0.2126)	5.6 (0.2205)

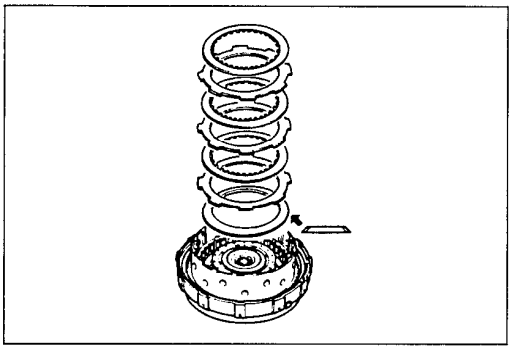

03U0KX-240

Forward clutch

1. Install the dished plate with the dished side downward.

Note
- **Installation order:**
  Driven-Drive-Driven-Drive-Driven-Drive

2. Install the drive and driven plates.

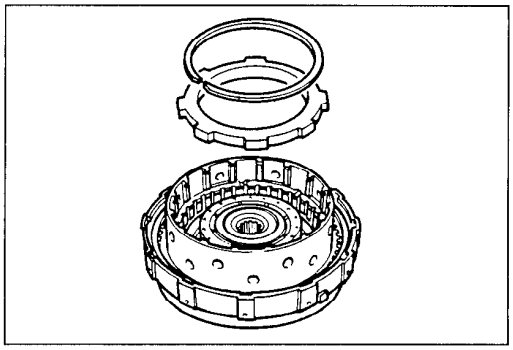

86U07B-215

3. Install the retaining plate.
4. Install the snap ring.

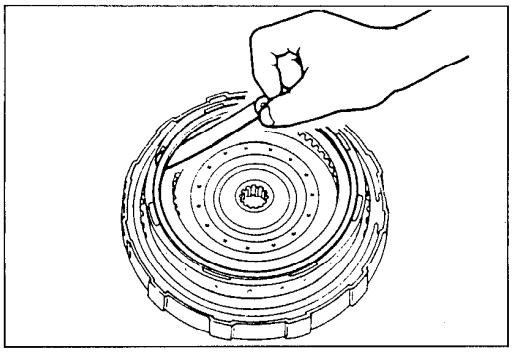

03U0K2-170

5. Measure the forward clutch clearance.
    (1) Measure the clearance between the snap ring and the retaining plate of the forward clutch.
    (2) If the clearance is not within specification, adjust it by selecting a proper retaining plate.

Forward clutch clearance:
1.0—1.2mm (0.040—0.047 in)

Retaining plate sizes

mm (in)

5.9 (0.2323)	6.1 (0.2402)	6.3 (0.2480)
6.5 (0.2559)	6.7 (0.2638)	8.9 (0.3504)

Downloaded from www.Manualslib.com manuals search engine

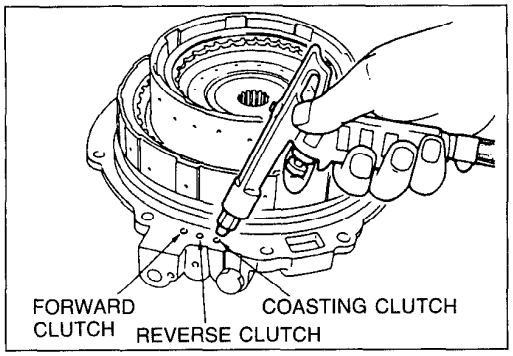

03U0KX-242

6. Check the clutch operation as follows.
   (1) Set the clutch assembly onto the oil pump.
   (2) Check the clutch operation by applying compressed air through the fluid passages shown.

Applied air pressure: 392 kPa (4.0 kg/cm^2, 57 psi)

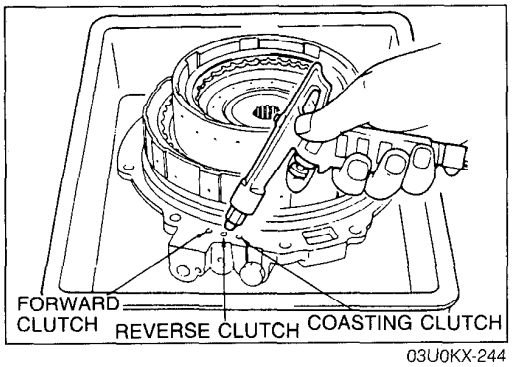

03U0KX-244

Caution

- **The compressed air must be under 392 kPa (4.0 kg/cm^2, 57 psi), and should not applied for over 3 seconds.**

(4) Verify that no bubbles come from between the piston and drum seal when applying compressed air through the fluid passages shown.

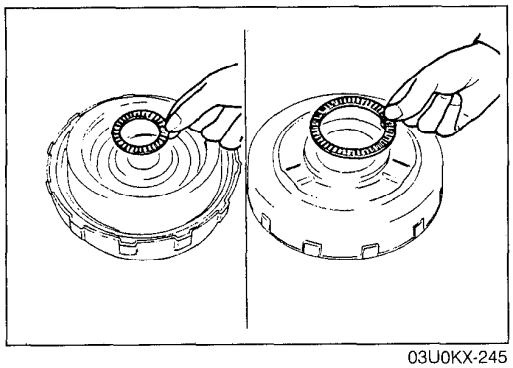

03U0KX-245

7. Apply petroleum jelly to the thrust bearings, and secure them on each side of the reverse and forward drum.

Thrust bearing outer diameter
Oil pump side: 86.0mm (3.39 in)

Small sun gear and one-way clutch side: 56.1mm (2.21 in)

Downloaded from www.Manualslib.com manuals search engine

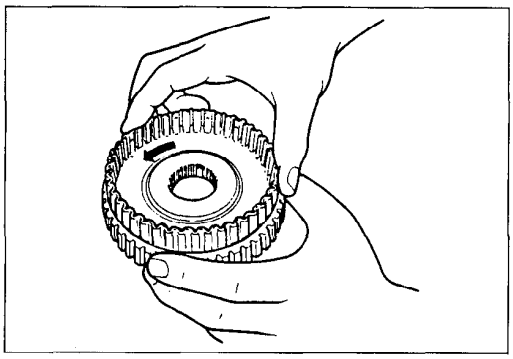

03U0KX-246

SMALL SUN GEAR AND ONE-WAY CLUTCH

Preinspection

One-way clutch operation

While holding the one-way clutch outer race, verify that the one-way clutch inner race rotates smoothly when turned clockwise and locks when turned counterclockwise. If not as specified, replace the one-way clutch.

Disassembly / Inspection / Assembly

1. Disassemble in the order shown in the figure.
2. Inspect all parts and repair or replace as necessary.
3. Assemble in the reverse order of disassembly, referring to **Assembly Procedure**.

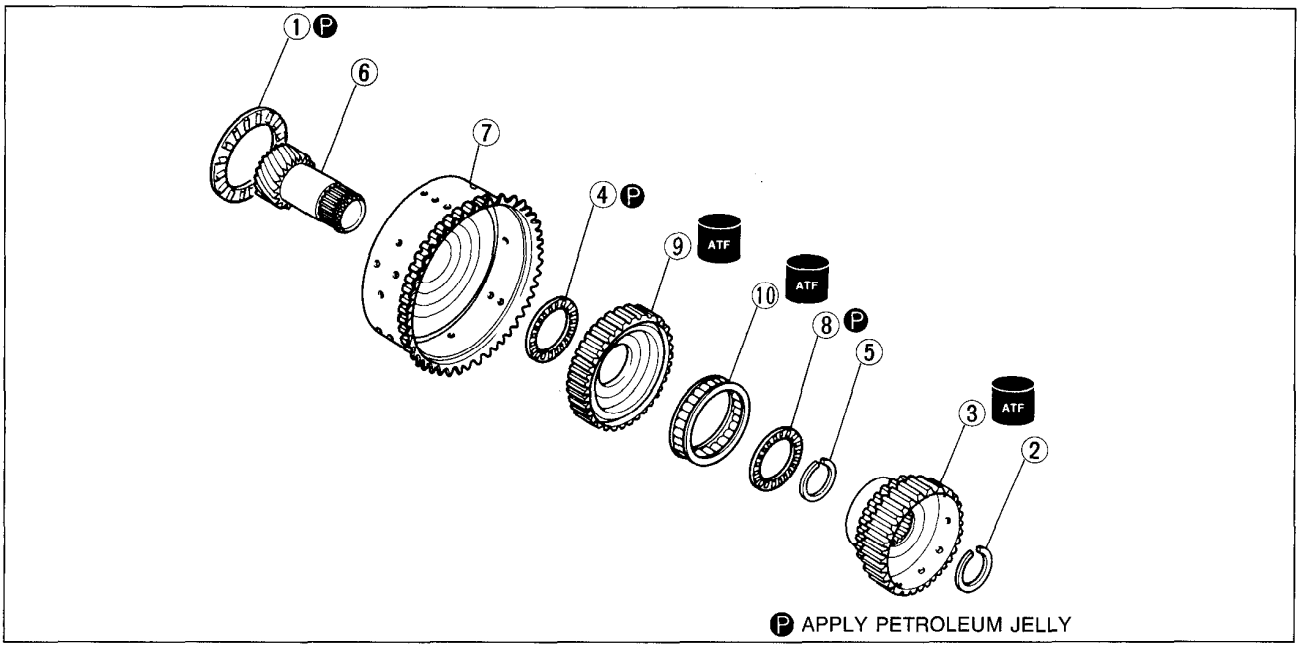

03U0K2-171

1. Thrust bearing
   Inspect for damage and rough rotation
2. Snap ring
3. One-way clutch inner race
4. Thrust bearing
   Inspect for damage and rough rotation
5. Snap ring
6. Small sun gear
   Inspection... page K2–182
7. Sun gear drum
   Inspection... page K2–182
8. Thrust bearing
   Inspect for damage and rough rotation
9. One-way clutch outer race
10. One-way clutch

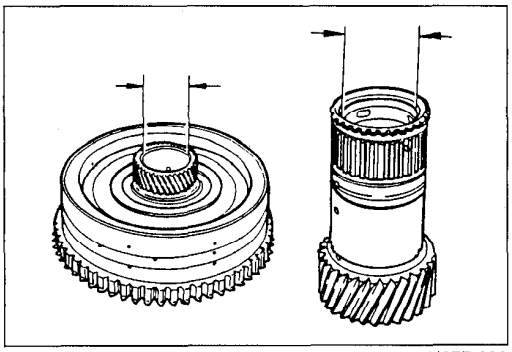

86U07B-222

Inspection

Check the following and replace any faulty parts.

1. Sun gear drum and small sun gear for damage or wear
2. Bushing for damage or wear

Specification

Sun gear drum: 33.425mm (1.316 in) max.
Small sun gear: 24.021mm (0.946 in) max.

Downloaded from www.Manualslib.com manuals search engine

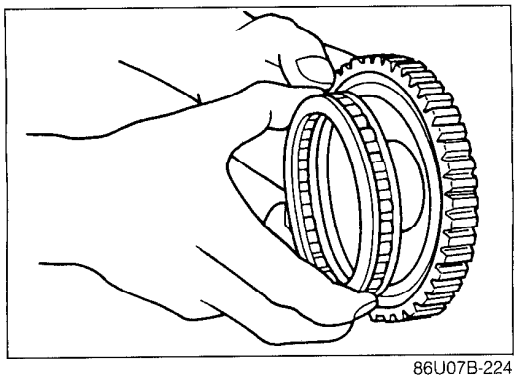
86U07B-224

Replacement of one-way clutch

1. Remove the one-way clutch inner race.
2. Remove the one-way clutch.
3. Remove the thrust bearing.

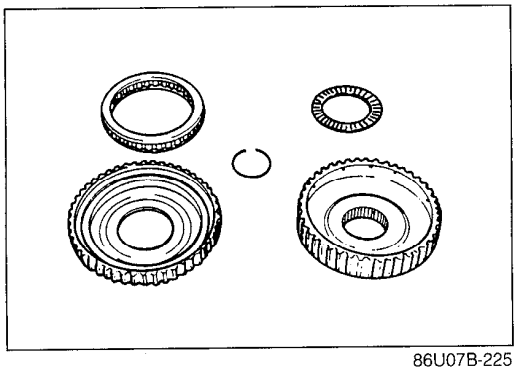
86U07B-225

4. Inspect the one-way clutch inner and outer races, and replace if necessary.

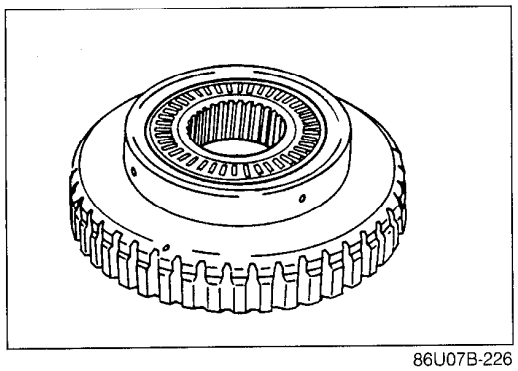
86U07B-226

5. Apply petroleum jelly to the thrust bearing to secure it; then install it to the one-way clutch inner race.

Thrust bearing outer diameter: 62.1mm (2.44 in)

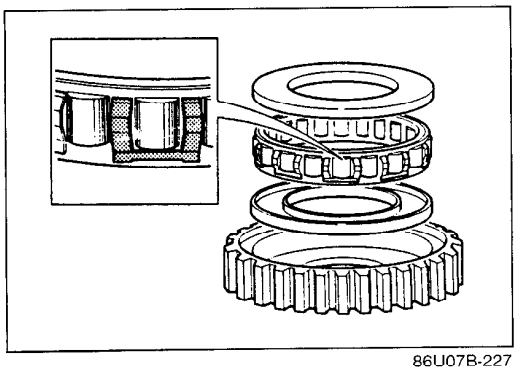
86U07B-227

Caution

- **Check that the spring cage of the one-way clutch faces toward the outer race.**

6. Install the one-way clutch into the one-way clutch outer race.

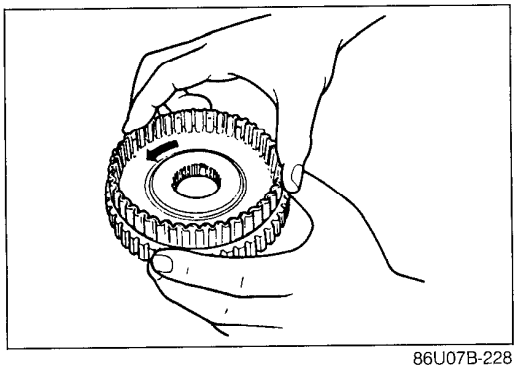
86U07B-228

7. Install the one-way clutch inner race into the one-way clutch outer race by turning inner race counterclockwise.
8. Hold the one-way clutch outer race. Check that the inner race turns only counterclockwise.

Downloaded from www.Manualslib.com manuals search engine

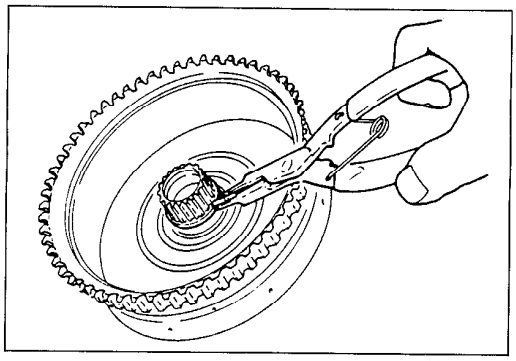

03U0K2-172

Assembly procedure

1. Install the small sun gear into the sun gear drum.
2. Install the snap ring.

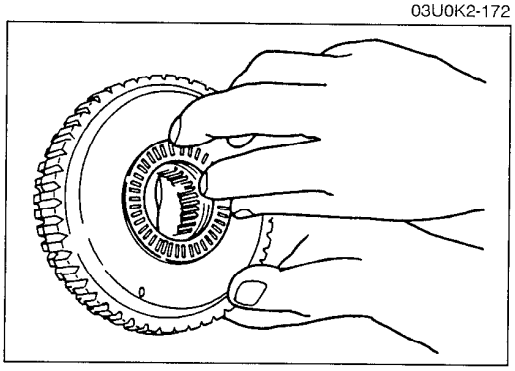

86U07B-230

3. Apply petroleum jelly to the thrust bearing to secure it; then install it to the one-way clutch inner race.

Thrust bearing outer diameter: 62.1mm (2.44 in)

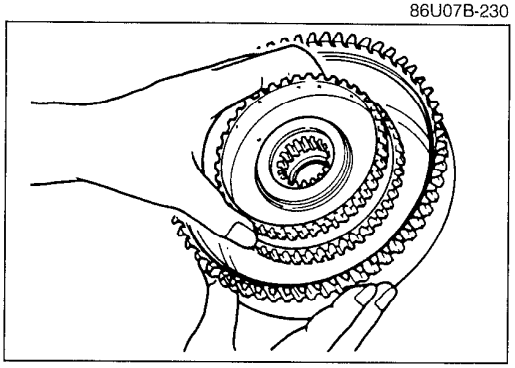

86U07B-231

Note

- **Align the splines of the one-way clutch inner race and small sun gear clutch hub.**

4. Install the one-way clutch inner and outer race to the sun gear drum.

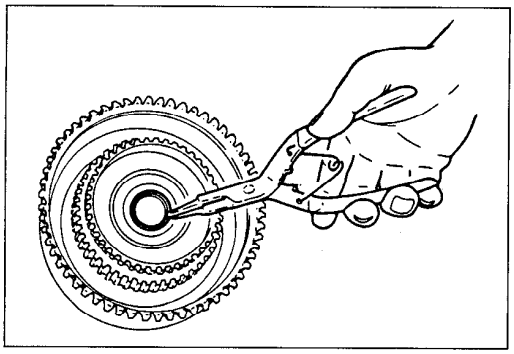

86U07B-232

5. Install the snap ring.

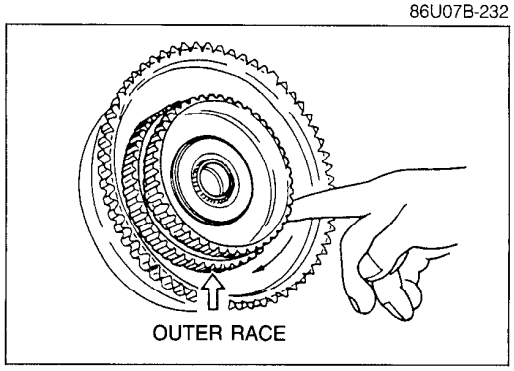

86U07B-233

6. Check that when the small sun gear is held, the one-way clutch outer race turns smoothly and only clockwise.

Downloaded from www.Manualslib.com manuals search engine

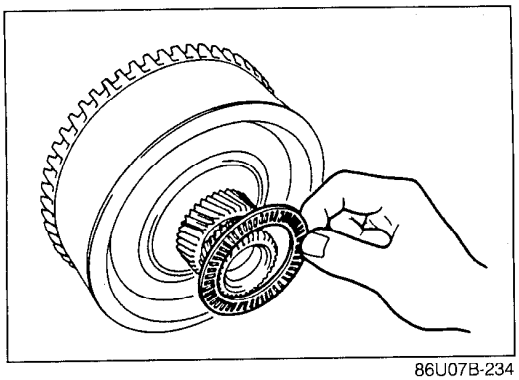

86U07B-234

7. Apply petroleum jelly to the thrust bearing to secure it; then install it to the sun gear drum.

Thrust bearing outer diameter: 72.0mm (2.83 in)

ONE-WAY CLUTCH CARRIER HUB ASSEMBLY

Disassembly / Inspection / Assembly

1. Disassemble in the order shown in the figure.
2. Inspect all parts and repair or replace as necessary.
3. Assemble in the reverse order of disassembly, referring to **Assembly Procedure**.

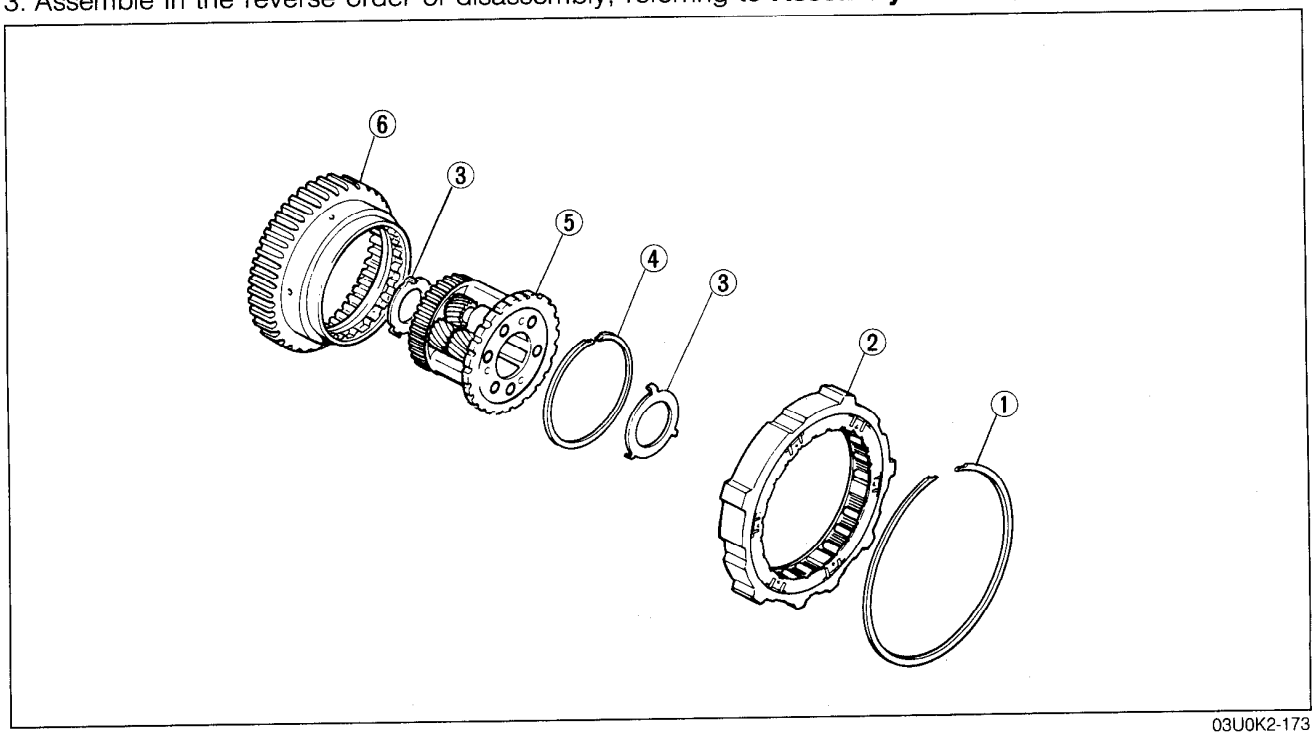

03U0K2-173

1. Snap ring
2. One-way clutch
   Inspection ..... page K2–185
3. Bearing races
   Inspect bearing for scoring and scratches
4. Snap ring
5. Carrier hub assembly
   Inspection ..... page K2–186
6. Inner race (Low and reverse hub)

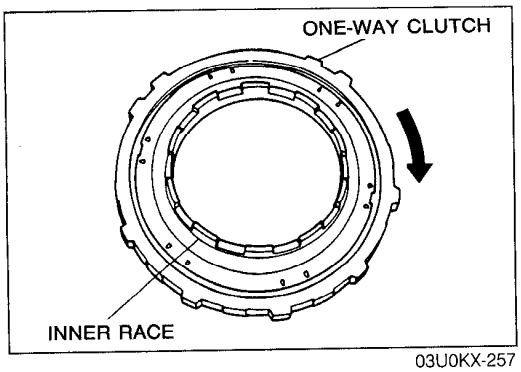

03U0KX-257

Inspection

One-way clutch

Check for the following and repair or replace as necessary.

Note

- **Assemble the one-way clutch and the inner race, then verify that the one-way clutch rotates only clockwise and smoothly.**

1. Damaged or worn one-way clutch and operation.
2. Detached roller.

Downloaded from www.Manualslib.com manuals search engine

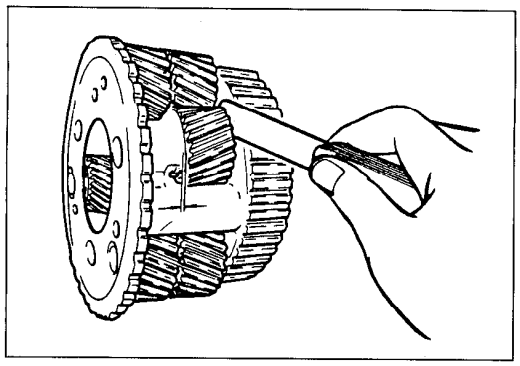

03U0KX-258

Carrier hub assembly

Check for the following and repair or replace as necessary.

1. Damaged or worn gear and operation.
2. Clearance between pinion washers and planetary carrier.

Clearance: 0.2—0.7mm (0.008—0.028 in)

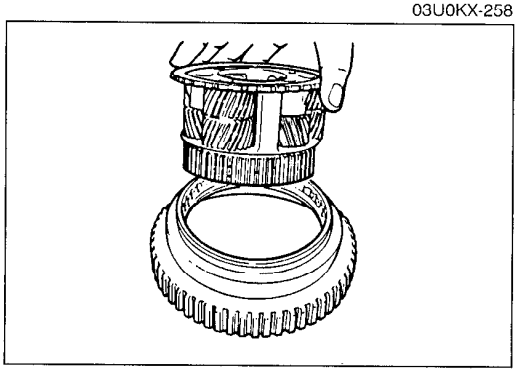

03U0KX-259

Assembly procedure

1. Assemble the carrier hub assembly to the inner race.

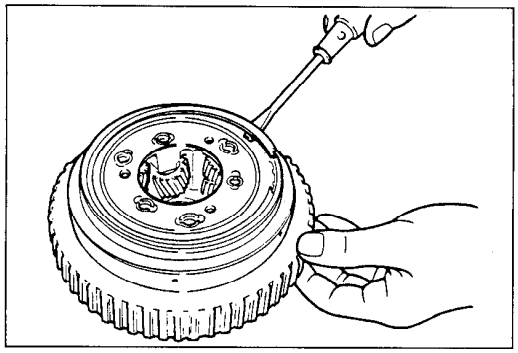

86U07B-240

2. Install the snap ring.

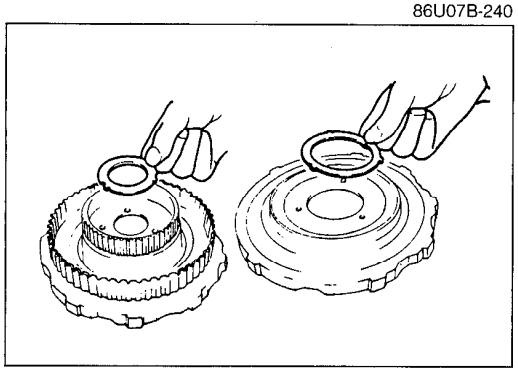

03U0K2-174

Note

- **Install the tangs of the bearing race into the alignment holes.**

3. Apply petroleum jelly to the bearing race and secure them to each side of the one-way clutch and carrier hub assembly.

Bearing race outer diameter
Sun gear drum side: 72.0mm (2.83 in)
3-4 clutch side: 570mm (2.21 in)

Downloaded from www.Manualslib.com manuals search engine

3-4 CLUTCH
Preparation
SST

49 G019 0A7A Compressor set, return spring	For disassembly/ assembly of 3-4 clutch	49 G019 025 Body B (Part of 49 G019 0A7)	For disassembly/ assembly of 3-4 clutch
49 G019 026 Plate (Part of 49 G019 0A7)	For disassembly/ assembly of 3-4 clutch	49 G019 027 Attachment A (Part of 49 G019 0A7)	For disassembly/ assembly of 3-4 clutch
49 G019 029 Nut (Part of 49 G019 0A7)	For disassembly/ assembly of 3-4 clutch	49 G019 012 Leak checker	For disassembly/ assembly of 3-4 clutch

03U0KX-261

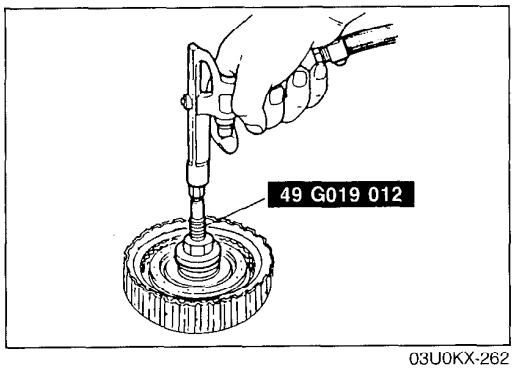

03U0KX-262

Preinspection
Clutch operation

1. Install the **SST** as shown, and check clutch operation by applying compressed air.

   Air pressure: 392 kPa (4.0 kg/cm^2, 57 psi)

Downloaded from www.Manualslib.com manuals search engine

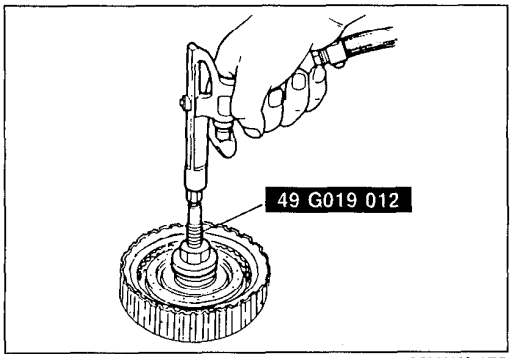

03U0K2-175

Clutch clearance

1. Measure the clearance between the snap ring and the retaining plate of the 3-4 clutch.
2. If the clearance is not within specification, adjust it by selecting a proper snap ring.

3-4 clutch clearance: 1.3—1.5mm (0.051—0.059 in)

Retaining plate sizes

mm (in)

4.2 (0.1654)	4.4 (0.1732)	4.6 (0.1811)
4.8 (0.1890)	5.0 (0.1969)	5.2 (0.2047)

Disassembly / Inspection / Assembly

1. Disassemble in the order shown in the figure, referring to **Disassembly Note**.
2. Inspect all parts and repair or replace as necessary.
3. Assemble in the reverse order of disassembly, referring to **Assembly Procedure**.

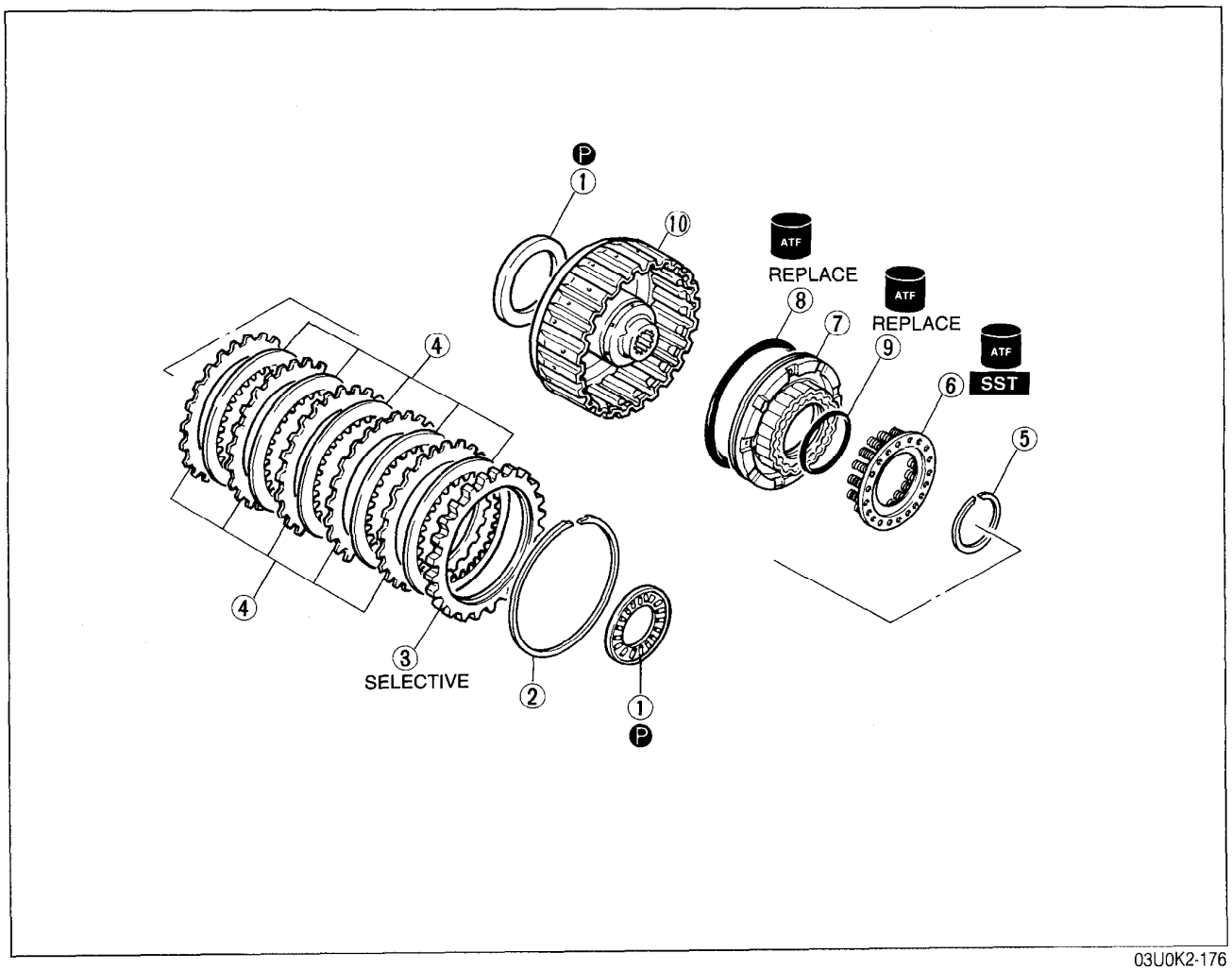

03U0K2-176

1. Thrust bearings
   Inspect for damage and rough rotation
2. Snap ring
3. Retaining plate
4. Drive and driven plates
   Inspect for wear and burning
   Inspection ..... page K2–189
5. Snap ring
6. Spring and retainer assembly
   Inspection ..... page K2–189
7. 3-4 clutch piston
   Inspection ..... page K2–189
8. Outer seal
9. Inner seal
10. 3-4 clutch drum

Downloaded from www.Manualslib.com manuals search engine

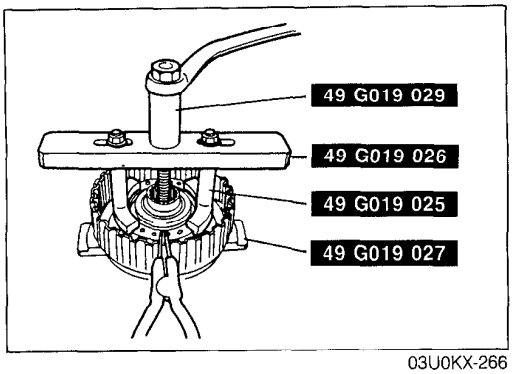

03U0KX-266

Disassembly note
Snap ring

1. Install the **SST** to the 3-4 clutch as shown.
2. Compress the spring and retainer assembly.
3. Remove the snap ring.
4. Remove the **SST**, then remove the spring and retainer.

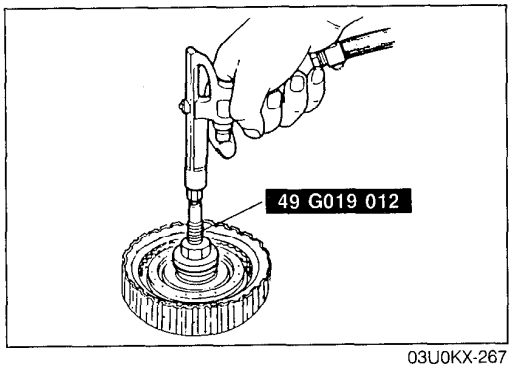

03U0KX-267

3-4 clutch piston

1. Remove the 3-4 clutch piston with the **SST** and compressed air.

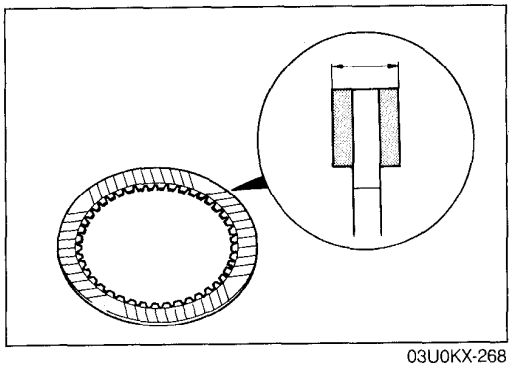
03U0KX-268

Inspection
Drive plates

1. Measure the facing thickness in three places, and determine the average of the three reading.

   Standard: 1.6mm (0.063 in)
   Minimum: 1.4mm (0.055 in)

2. If not within specification, replace the drive plate(s).

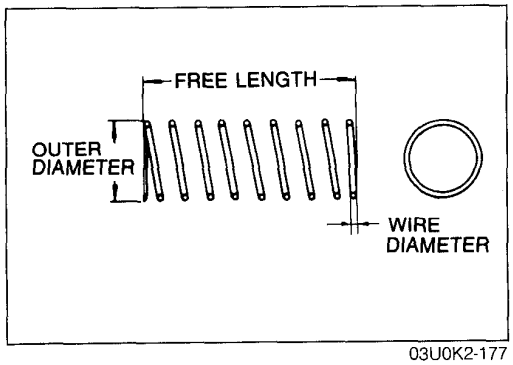

03U0K2-177

Spring and retainer assembly

1. Measure the spring free length.

Specifications

Outer dia. mm (in)	Free length mm (in)	No. of coils	Wire dia. mm (in)
74.4 (2.929)	40.5 (1.594)	1.0	5.0 (0.197)

2. If not within specification, replace the spring.

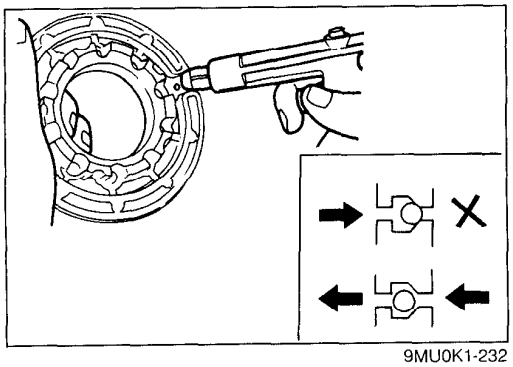
9MU0K1-232

Clutch piston

1. Verify that there is no air leakage when applying compressed air through the oil hole opposite the return spring.
2. Verify that there is air flow when applying compressed air through the oil hole on return spring side.

   Air pressure: 392 kPa (4.0 kg/cm^2, 57 psi) max.

Downloaded from www.Manualslib.com manuals search engine

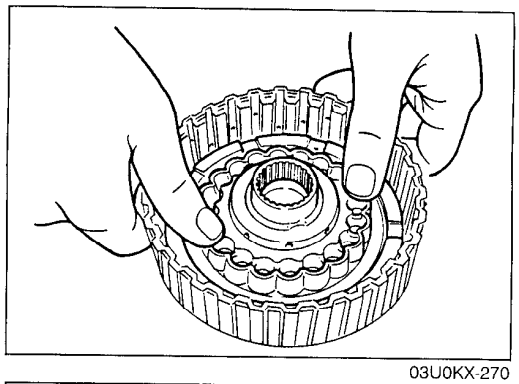

03U0KX-270

Assembly procedure

1. Install the 3-4 clutch piston.
   (1) Apply ATF to the inner and outer seals, and install them onto the 3-4 clutch piston.
   (2) Install the piston by pushing evenly around the circumference, being careful not to damage the seal rings.

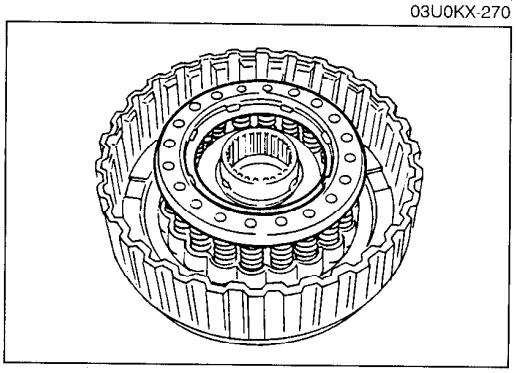

03U0KX-271

2. Install the spring and retainer.

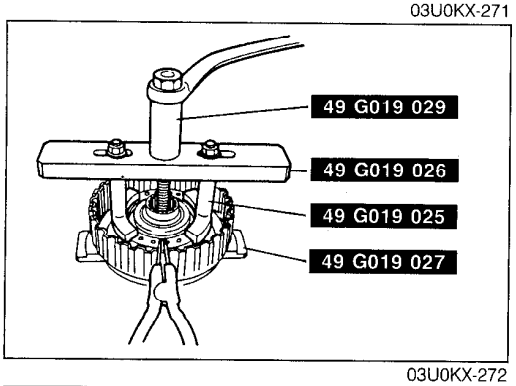

03U0KX-272

3. Install the **SST** to the 3-4 clutch as shown.
4. Compress the spring and retainer.
5. Install the snap ring.
6. Remove the **SST**.

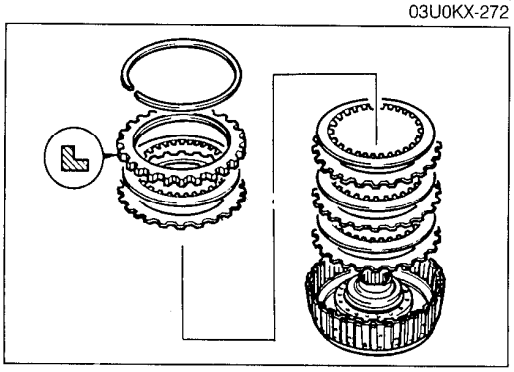

03U0K2-178

Note

- **Installation order:**
  Driven-Drive-Driven-Drive-Driven-Drive-Driven-Drive

7. Install the drive and driven plates.
8. Install the retaining plate.
9. Install the snap ring.

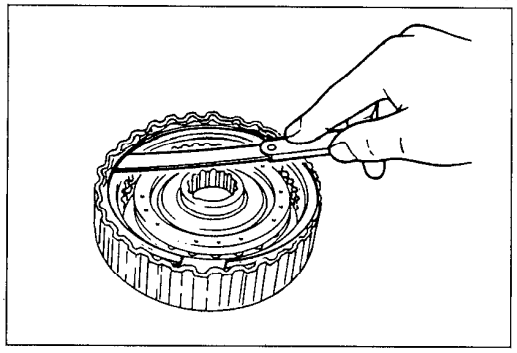

03U0K2-179

10. Measure the 3-4 clutch clearance.
    (1) Measure the clearance between the snap ring and the retaining plate of the 3-4 clutch.
    (2) If the clearance is not within specification, adjust it by selecting a proper retaining plate.

3-4 clutch clearance: 1.3—1.5mm (0.051—0.059 in)

Retaining plate sizes

mm (in)

4.2 (0.1654)	4.4 (0.1732)	4.6 (0.1811)
4.8 (0.1890)	5.0 (0.1969)	5.2 (0.2047)

Downloaded from www.Manualslib.com manuals search engine

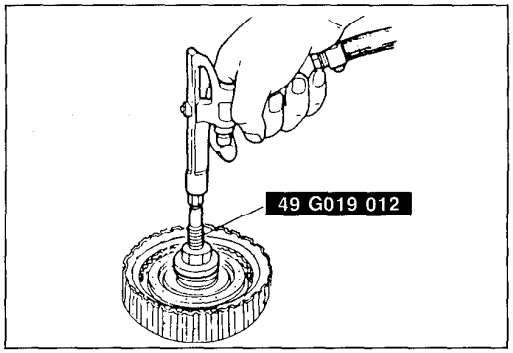

03U0K2-180

11. Check clutch operation as follows:
    (1) Install the **SST** as shown, and check clutch operation by applying compressed air.

    Air pressure: 392 kPa (4.0 kg/cm^2, 57 psi)

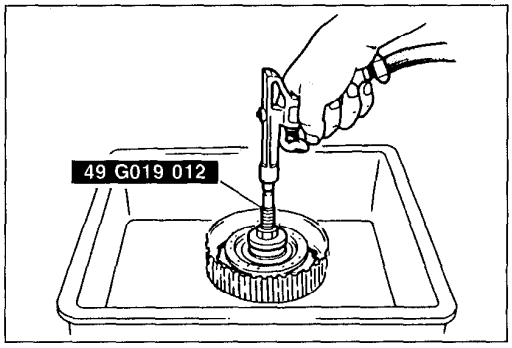

03U0K2 181

Caution
- **The compressed air must be under 392 kPa (4.0 kg/cm^2, 57 psi) and not applied for over 3 seconds.**

(2) Verify that no bubbles escape past the 3-4 clutch piston seal while applying compressed air.

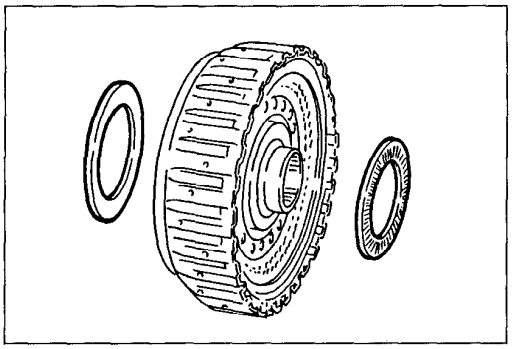

03U0K2-182

12. Apply petroleum jelly to the thrust bearings and secure them to each side of the 3-4 clutch drum.

    Thrust bearing outer diameter
    Carrier hub side: 56.1mm (2.21 in)
    Output shell side: 72.1mm (2.84 in)

Downloaded from www.Manualslib.com manuals search engine

LOW AND REVERSE BRAKE
Preparation
SST

49 G019 0A7A Compressor set, return spring	For disassembly/ assembly of low and reverse brake	49 G019 026 Plate (Part of 49 G019 0A7A)	For disassembly/ assembly of low and reverse brake
49 G019 027 Attachment A (Part of 49 G019 0A7A)	For disassembly/ assembly of low and reverse brake	49 G019 029 Nut (Part of 49 G019 0A7A)	For disassembly/ assembly of low and reverse brake
49 B019 002 Body (Part of 49 G019 0A7A)	For disassembly/ assembly of low and reverse brake		

03U0KX-278

Downloaded from www.Manualslib.com manuals search engine

Disassembly / Inspection / Assembly

1. Disassemble as in the shown in the figure, referring to **Disassembly Note**.
2. Inspect all parts and repair or replace as necessary.
3. Assemble in the reverse order of disassembly, referring to **Assembly Procedure**.

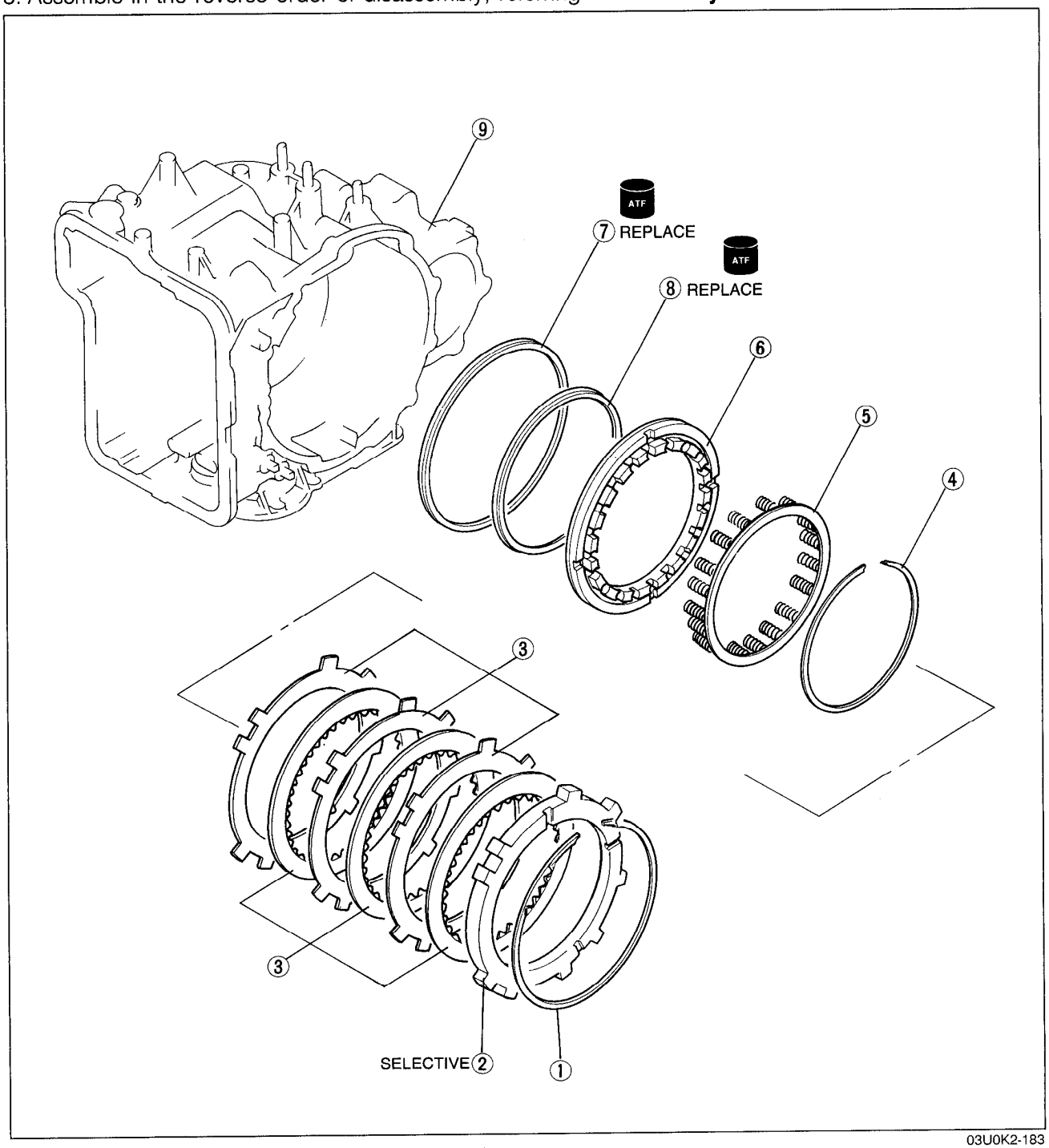

03U0K2-183

1. Snap ring
2. Retaining plate
3. Drive and driven plates
   Inspect for wear and burning
   Inspection ..... page K2–194
4. Snap ring
   Disassembly note ..... page K2–194
5. Spring and retainer assembly
   Inspection ..... page K2–194
6. Low and reverse brake piston
   Disassembly Note ..... page K2–194
   Inspection ..... page K2–194
7. Outer seal
8. Inner seal
9. Transaxle case

Downloaded from www.Manualslib.com manuals search engine

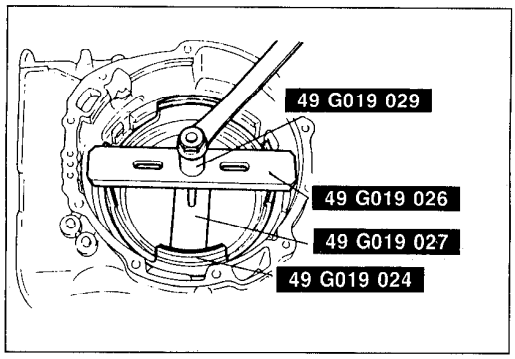

03U0KX-283

Disassembly note
Snap ring
1. Install the **SST** in the transaxle case as shown.
2. Compress the spring and retainer assembly.
3. Remove the snap ring.
4. Remove the **SST**, then remove the spring and spring retainer assembly.

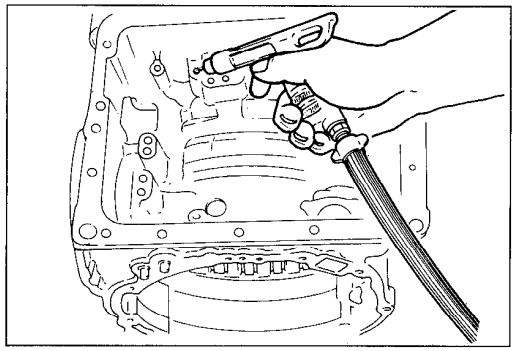
03U0KX-284

Low and reverse brake piston
1. Remove the low and reverse brake piston by applying compressed air through the fluid passage.

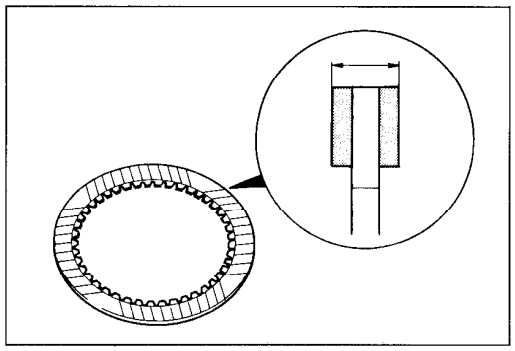
03U0KX-285

Inspection
Drive plates
1. Measure the facing thickness in three places, and determine the average of the three readings.

   Standard: 1.6mm (0.063 in)
   Minimum: 1.4mm (0.055 in)

2. If not within specification, replace the drive plates.

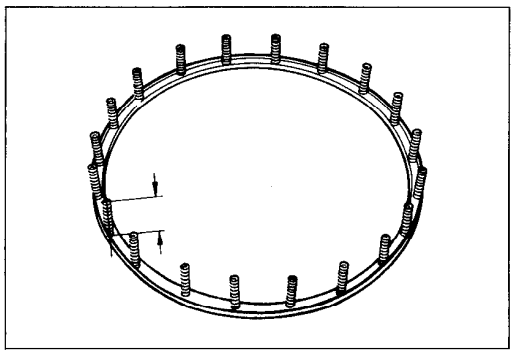
03U0KX-286

Spring and retainer assembly
1. Measure the spring free length and check for deformation.

   Free length of spring: 14.3mm (0.563 in)

2. If not within specification, replace the spring and retainer assembly.

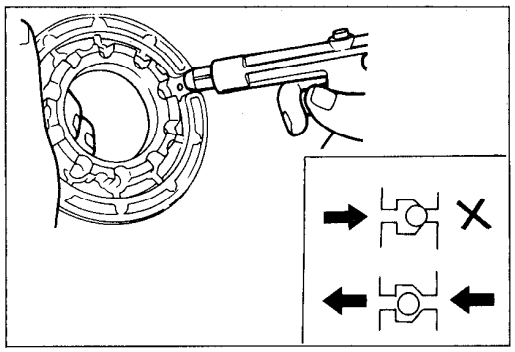
03U0KX-287

Low and reverse brake piston
1. Verify that there is no air leakage when applying compressed air through the oil hole opposite the return spring.
2. Verify that there is air flow when applying compressed air through the oil hole on the return spring side.

   Air pressure: 392 kPa (4.0 kg/cm^2, 57 psi) max.

Downloaded from www.Manualslib.com manuals search engine

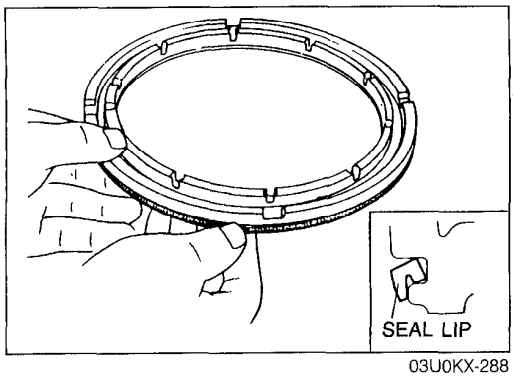

03U0KX-288

Assembly procedure

1. Install the low and reverse brake piston.
   (1) Apply ATF to the inner and outer seals, and install them onto the low and reverse brake piston.
   (2) Face the outer seal lip toward the inside by gently rolling it down around the circumference for easier installation into the case.

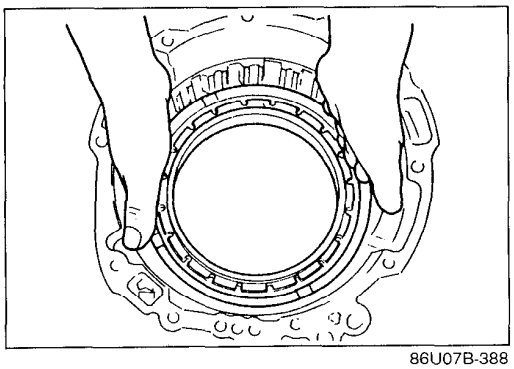
86U07B-388

   (3) Install the low and reverse brake piston by pushing evenly around the circumference, being careful not to damage the outer seal.

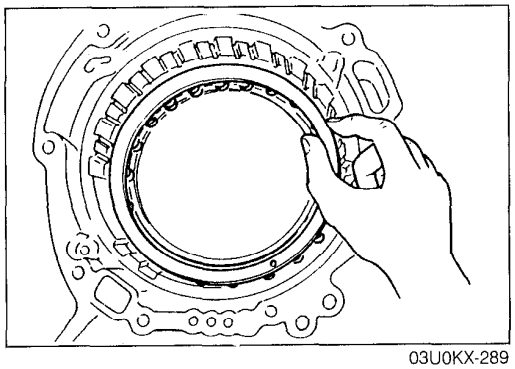
03U0KX-289

2. Install the spring and retainer assembly.

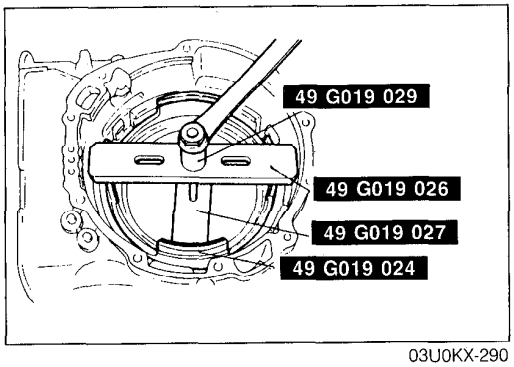

03U0KX-290

3. Install the **SST** in the transaxle case.
4. Compress the spring and retainer assembly.
5. Install the snap ring with snap-ring pliers.
6. Remove the **SST**.

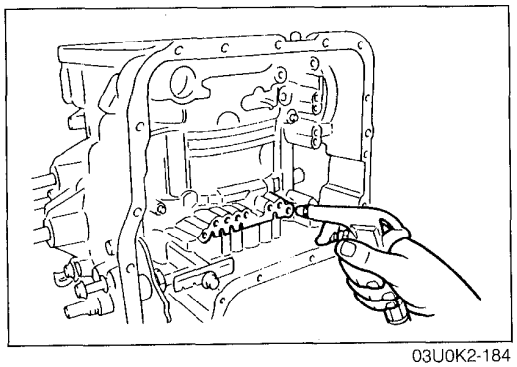
03U0K2-184

Caution

- **The compressed air must be under 392 kPa (4.0 kg/cm^2, 57 psi) and not applied for over 3 seconds.**

7. Check the low and reverse brake piston operation.
   (1) Check that no bubbles come from between the piston and seals when applying compressed air through the fluid passage.

Downloaded from www.Manualslib.com manuals search engine

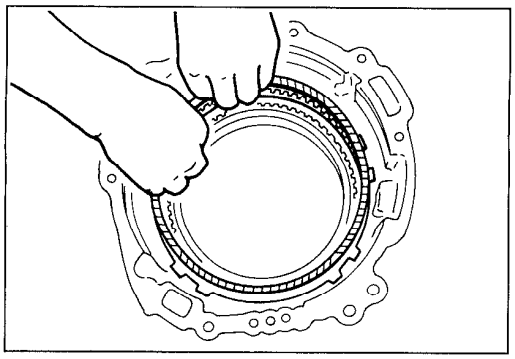

03U0KX-292

Note
- **Installation order:**
  Driven-Drive-Driven-Drive-Driven-Drive-Driven-Drive

8. Install the drive and driven plates.

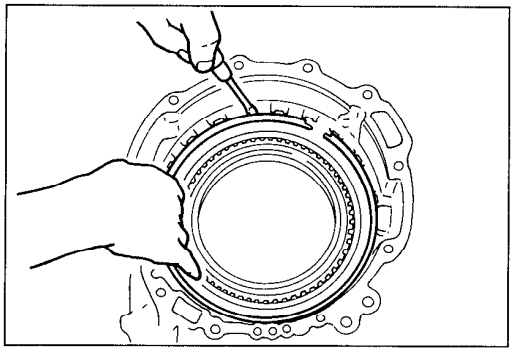

03U0KX-293

9. Install the retaining plate.
10. Install the snap ring.

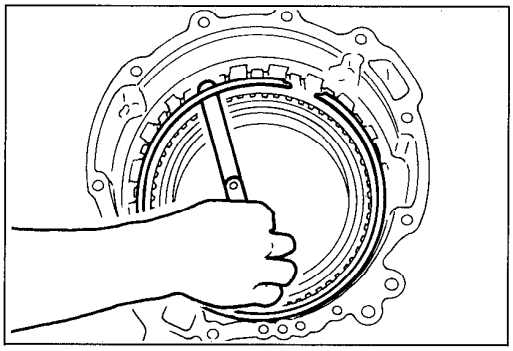

03U0K2-185

11. Measure the low and reverse brake clearance.
    (1) Measure the clearance between the snap ring and the low and reverse brake retaining plate.
    (2) If the clearance is not within specification, adjust it by selecting a proper retaining plate.

Low and reverse brake clearance:
2.1—2.4mm (0.083—0.094 in)

Retaining plate sizes

mm (in)

10.0 (0.3937)	10.2 (0.4016)	10.4 (0.4094)
10.6 (0.4173)	10.8 (0.4252)	

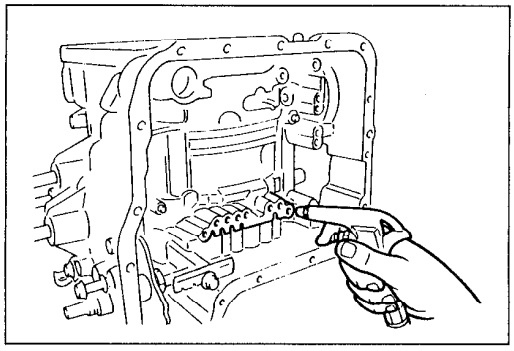

03U0KX-295

12. Check the low and reverse brake operation by applying compressed air through the fluid passage as shown in the figure.

Air pressure: 392 kPa (4.0 kg/cm^2, 57 psi)

Downloaded from www.Manualslib.com manuals search engine

2-4 BRAKE BAND, SERVO
Preparation
SST

49 G017 5A0 Support, engine	For support of engine	49 G017 501 Bar (Part of 49 G017 5A0)	For support of engine
49 G017 502 Support (Part of 49 G017 5A0)	For support of engine	49 G017 503 Hock (Part of 49 G017 5A0)	For support of engine
49 G019 028 Bolt	For adjustment of 2-4 brake band	49 G019 029 Nut	For adjustment of 2-4 brake band
49 G019 030 Plate	For adjustment of 2-4 brake band		

03U0K2-186

Downloaded from www.Manualslib.com manuals search engine

Disassembly / Inspection / Assembly

1. Disassemble in the order shown in the figure.
2. Inspect all parts and repair or replace as necessary.
3. Assemble in the reverse order of disassembly, referring to **Assembly Note**.

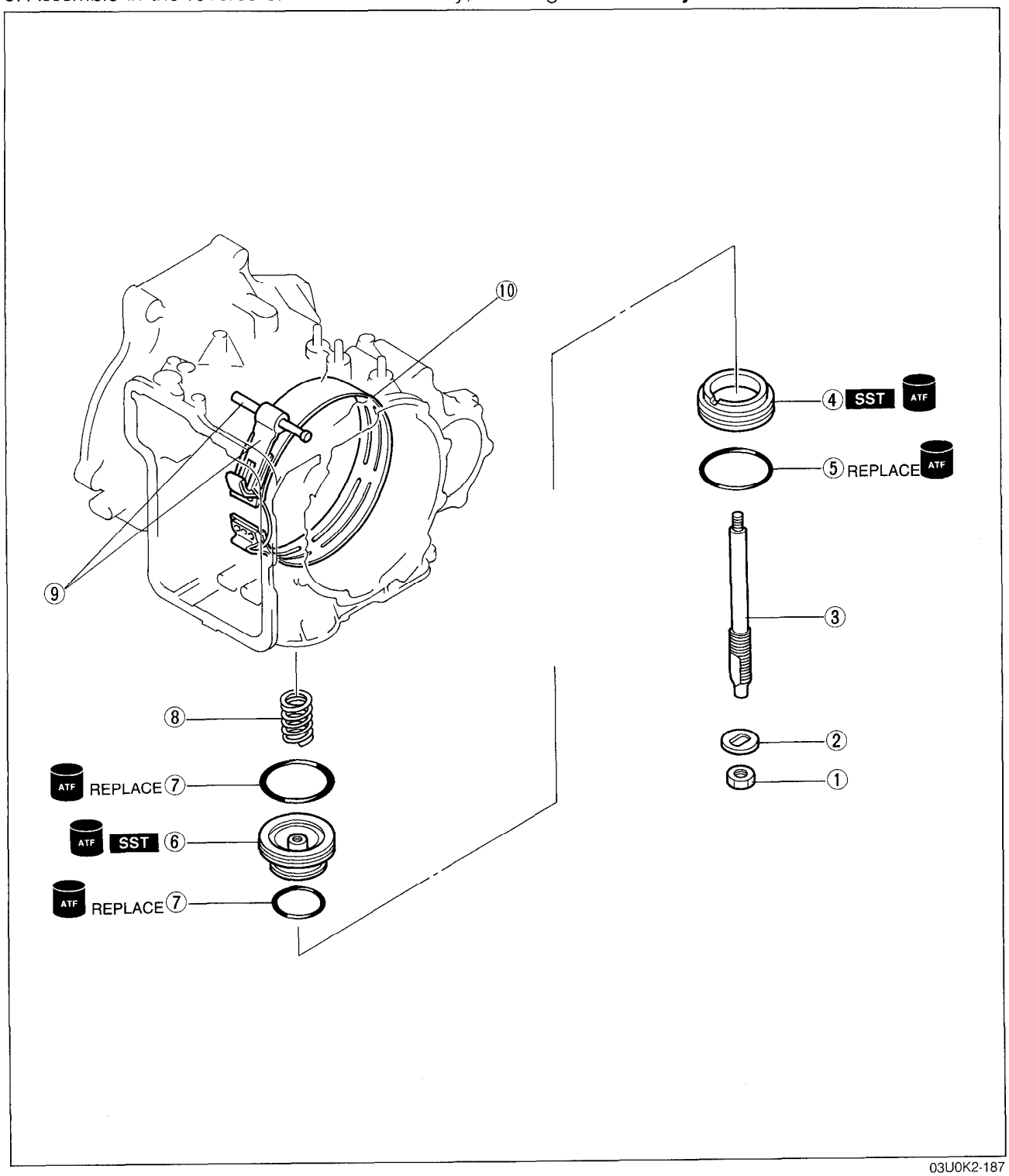

03UOK2-187

1. Bolt
2. Washer
3. Piston stem
4. Servo retainer
5. O-ring
6. Servo piston
7. D-rings
8. Return servo spring
9. Anchor strut and shaft
10. 2-4 brake band

Downloaded from www.Manualslib.com manuals search engine

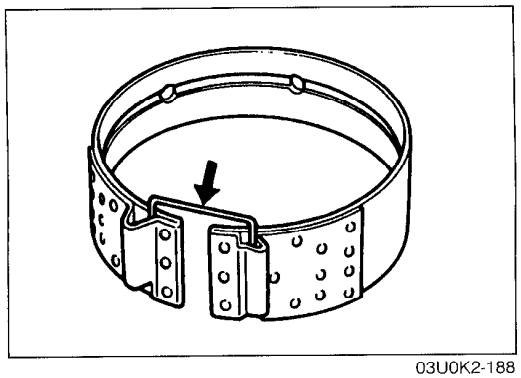

03U0K2-188

Inspection
2-4 brake band
Check the following and replace if necessary.
1. Damaged or worn 2-4 brake band

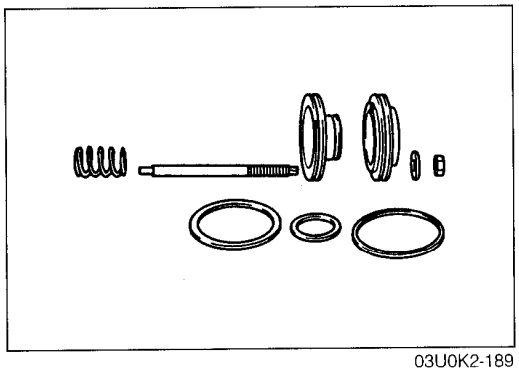

03U0K2-189

Band Servo
Check the following and replace any faulty parts.
1. Damaged or worn piston
2. Weakened return spring

Free length of spring: 42.0mm (1.654 in)

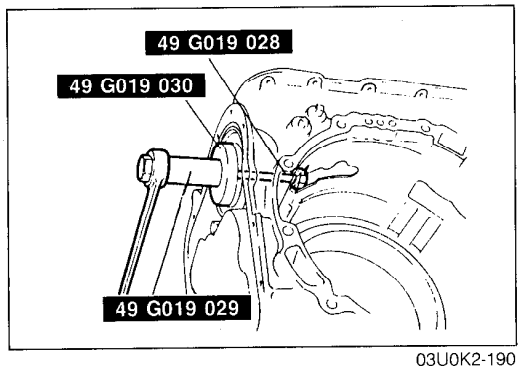

03U0K2-190

Assembly note
Band servo
1. Install the servo to the transaxle case.
   (1) Install the servo spring and servo.
   (2) Compress the servo with the **SST**.
   (3) Install the snap ring.
   (4) Remove the **SST**.
   (5) Install the piston stem.

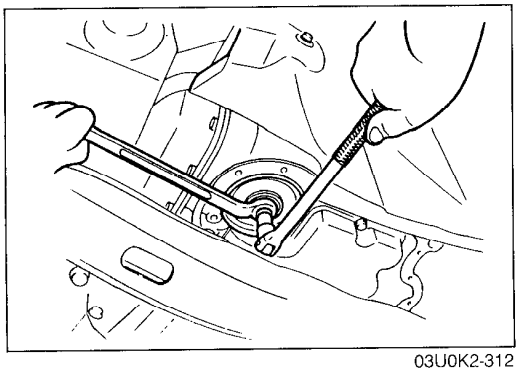

03U0K2-312

Adjustment of 2-4 brake band
1. Remove the oil pan. (Refer to page K2–158.)
2. Adjust the 2-4 brake band. (Refer to page K2–271.)

Downloaded from www.Manualslib.com manuals search engine

2-3 ACCUMULATOR

Disassembly / Inspection / Assembly

1. Disassemble in the order shown in the figure.
2. Inspect all parts and repair or replace as necessary.
3. Assemble in the reverse order of disassembly referring to **Assembly Procedure**.

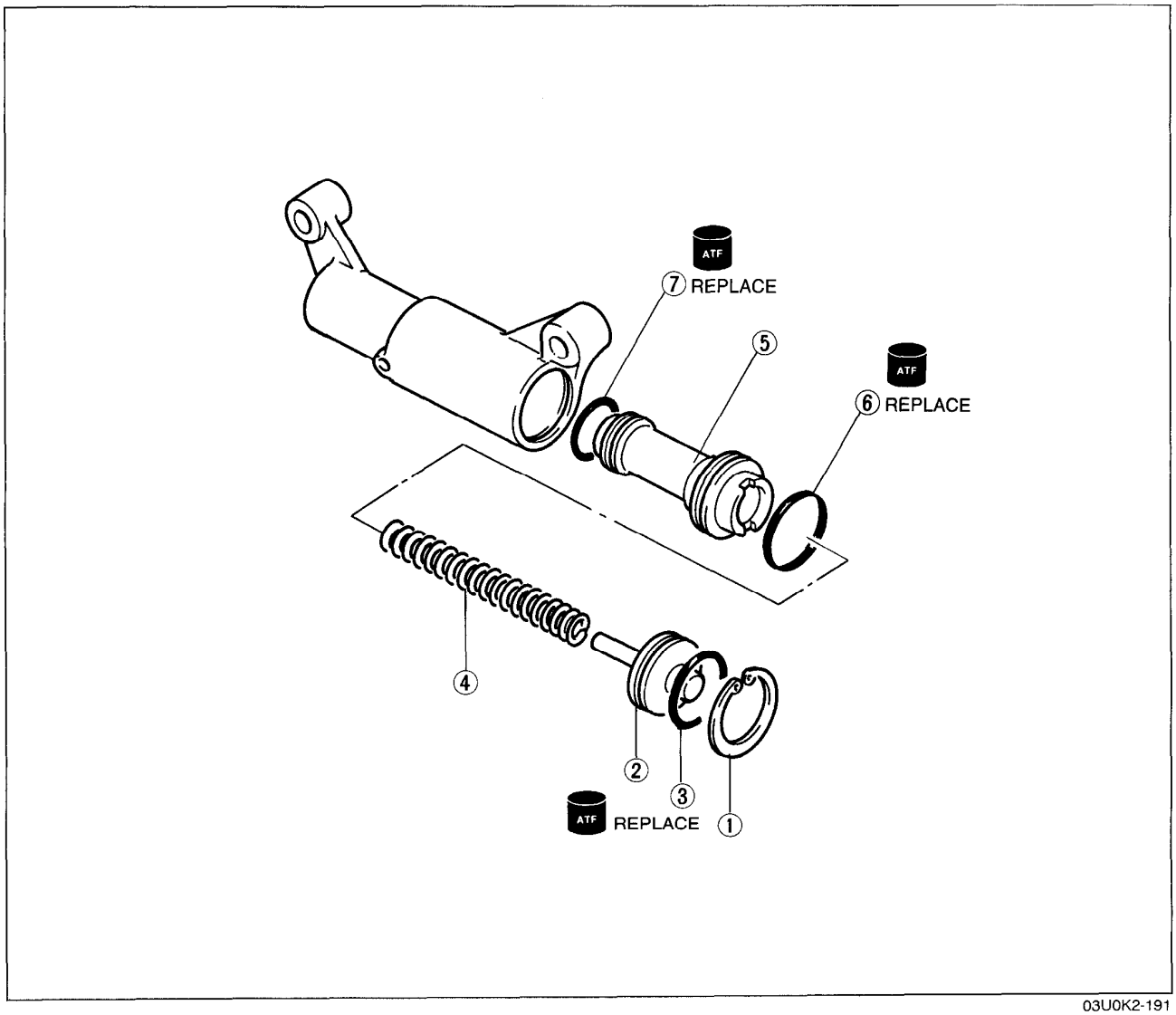

03U0K2-191

1. Snap ring
2. Stopper plug
3. O-ring
4. 2-3 accumulator spring
   Inspection ..... page K2–200
5. 2-3 accumulator piston
6. Large seal ring
7. Small seal ring

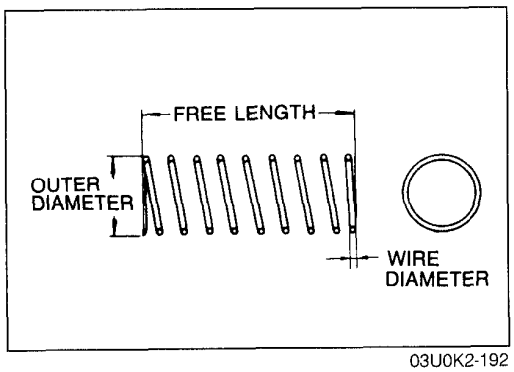

03U0K2-192

Inspection

2-3 accumulator spring

1. Measure the spring free length.

Free leghth of spring: 75.9mm (2.988 in)

Downloaded from www.Manualslib.com manuals search engine

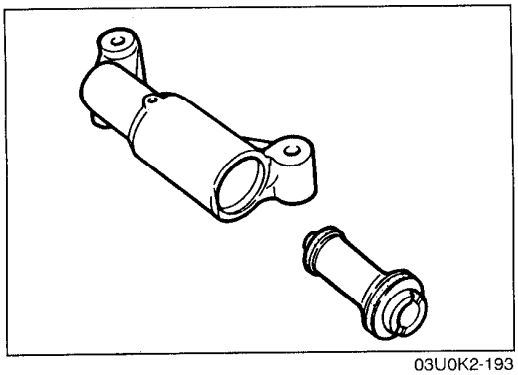

03U0K2-193

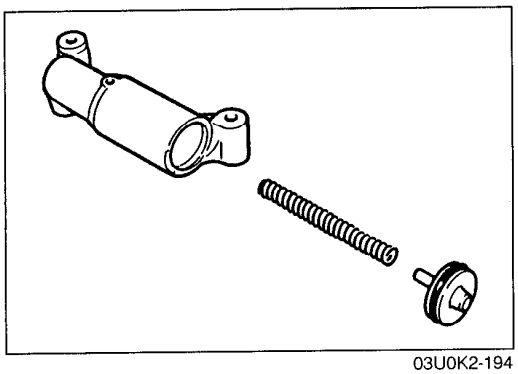

03U0K2-194

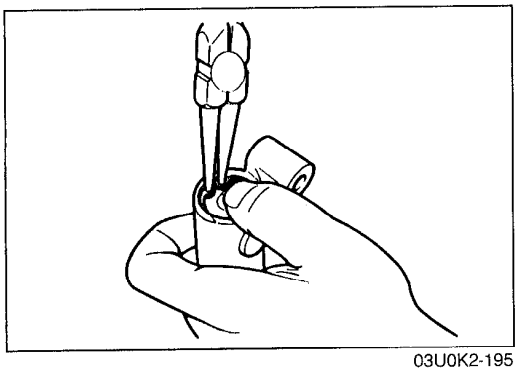

03U0K2-195

Assembly procedure

1. Apply ATF to new large seal ring and small seal ring; then install them to the accumulator piston.
2. Install the 2-3 accumulator piston.
3. Install the spring to the piston.
4. Apply ATF to new O-ring, and install it onto the stopper plug.
5. Install the stopper plug.
6. Install the snap ring while holding in the stopper plug.

Downloaded from www.Manualslib.com manuals search engine

IDLER GEAR (TRANSAXLE)

Preparation

SST

49 FT01 439 Holder, idler gear shaft	For adjustment of bearing preload	49 G019 013 Bearing remover	For removal of bearing
49 0180 510B Attachment, steering worm bearing preload measuring	For adjustment of bearing preload	49 S120 785 Installer, boot	For installation of bearing outer race

03U0K2-196

Disassembly / Assembly

1. Disassemble in the order shown in the figure, referring to **Disassembly Note**.
2. Inspect all parts and repair or replace as necessary.
3. Assemble in the reverse order of disassembly, referring to **Assembly Procedure**.

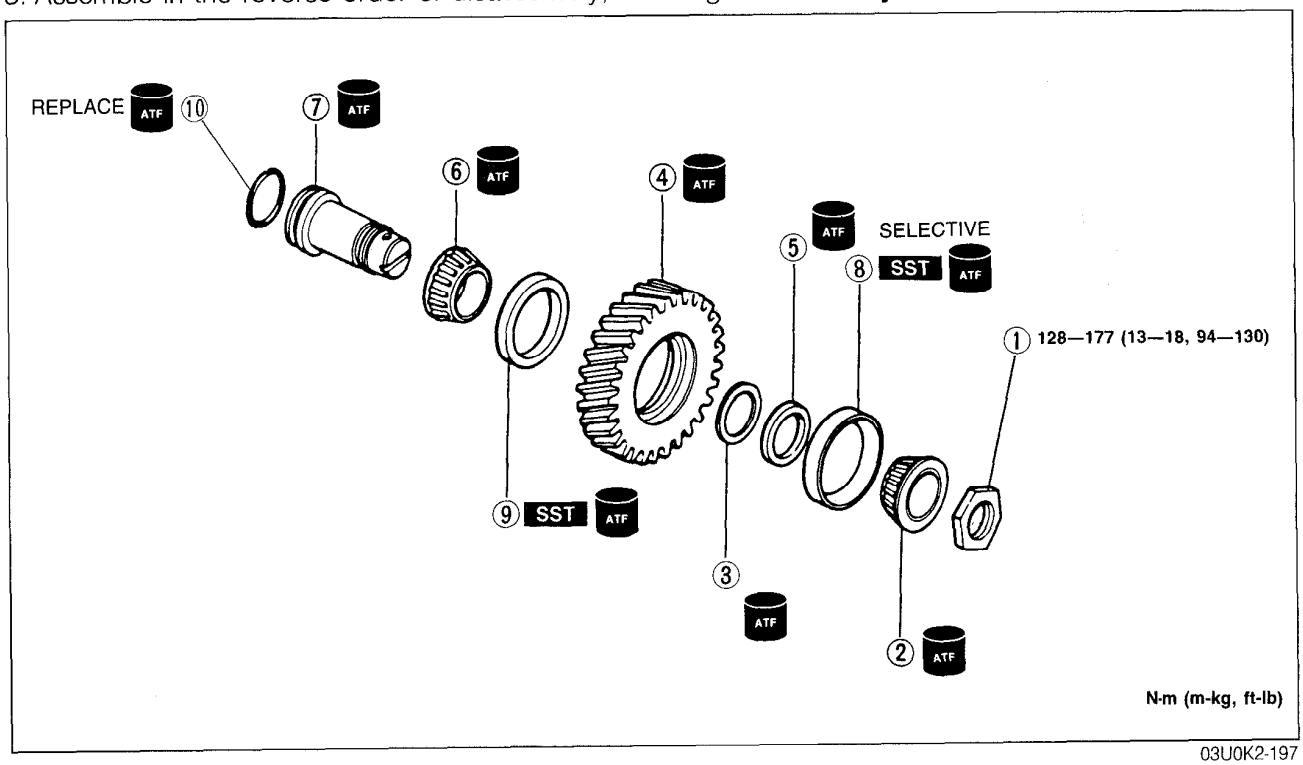

03U0K2-197

1. Locknut
   Disassembly note ..... page K2–203
2. Bearing
   Inspect for wear and rough rotation
3. Spacer
4. Idler gear
   Inspect for wear and cracks
5. Adjust shim
   Adjustment of bearing preload
6. Bearing
   Inspect for wear and rough rotation
7. Idler shaft
   Inspect for wear and rough rotation
8. Bearing outer race
   Disassembly note ..... page K2–203
   Inspect bearing surface for scoring and scratches
9. Bearing outer race
   Disassembly note ..... page K2–203
   Inspect bearing surface for scoring and scratches
10. O-ring

Downloaded from www.Manualslib.com manuals search engine

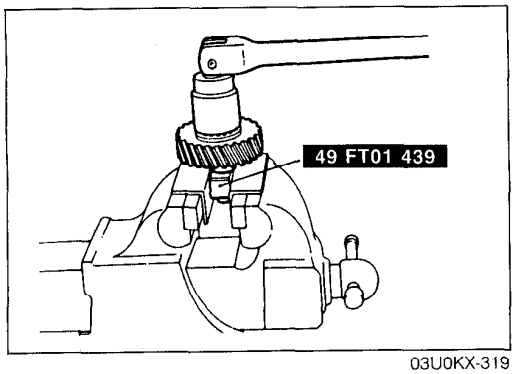

03U0KX-319

Disassembly note
Locknut

Note
- **Use protective plates in the vise to prevent damage to the SST.**

1. Secure the idler shaft in a vise with the **SST**, and remove the locknut.

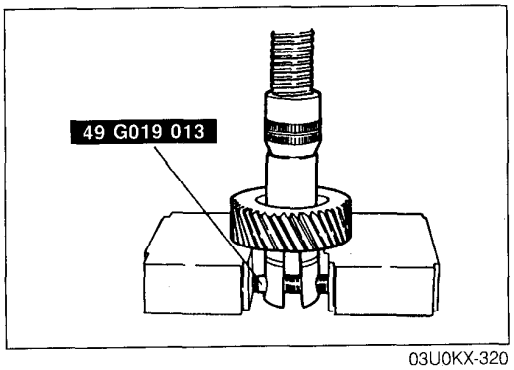

03U0KX-320

Bearing outer race
1. Remove the bearing outer race from the idler gear with the **SST**.

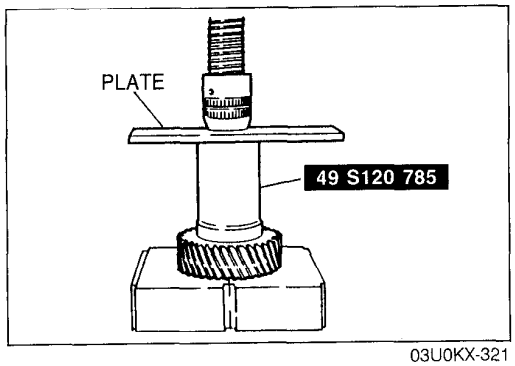

03U0KX-321

Assembly procedure
1. Press the bearing outer races in with the **SST**.

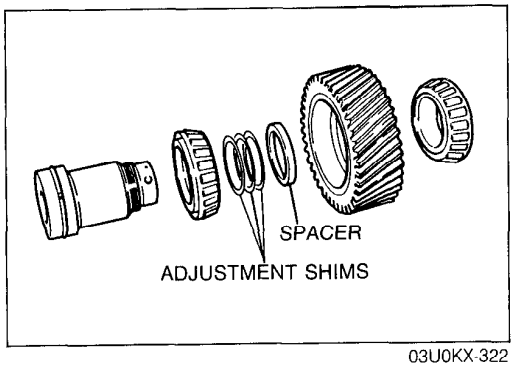

03U0KX-322

2. Install the idler gear bearing onto the idler shaft, then install the idler gear, adjustment shims, spacer, and bearing.

Note
- **Use protective plates in the vise to prevent damage to the SST.**

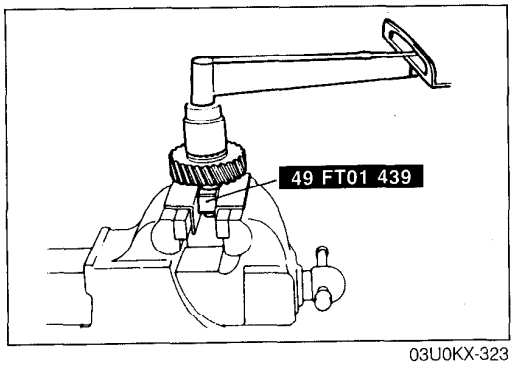

03U0KX-323

3. Secure the idler shaft in a vise with the **SST**, and tighten the locknut to the lower limit of the tightening torque.

Tightening torque:
128—177 N·m (13—18 m-kg, 94—130 ft-lb)

Downloaded from www.Manualslib.com manuals search engine

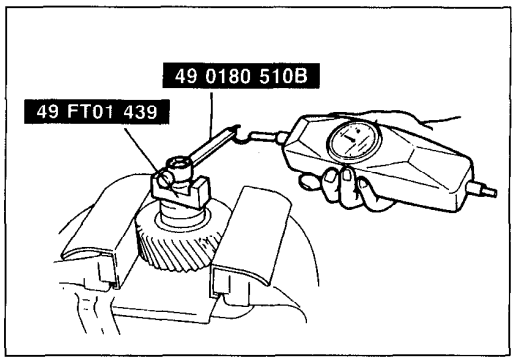

03U0KX-324

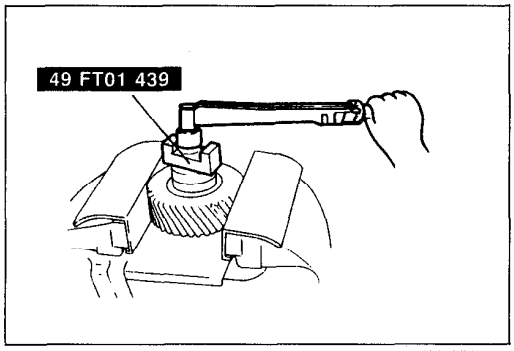

03U0KX-325

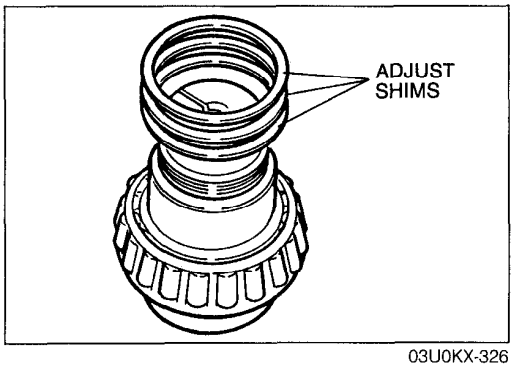

03U0KX-326

Note
- **Use protective plates in the vise to prevent damage to the idler gear.**

4. Check and adjust the idler gear bearing preload.
   (1) Turn the idler gear assembly and **SST** over, and secure the gear in the vice.
   (2) Attach the **SST** and spring scale or torque wrench, and measure the preload while tightening the locknut.

Note
- **Read the preload when the idler shaft starts to turn.**

Tightening torque:
128—177 N·m (13—18 m-kg, 94—130 ft-lb)

Preload:
0.03—0.9 N·m (0.3—9.0 cm-kg, 0.26—7.8 in-lb)

Value indicated on pull scale:
0.3—9 N (0.03—0.9 kg, 0.066—1.98 lb)

Note
- **The maximum allowable number of shims is 7.**
- **Preload is reduced by increasing the thickness of the shims, or increased by reducing the thickness.**

5. If the specified preload cannot be obtained within the specified tightening torque, adjust by selecting the proper adjustment shims.

Thickness of shim			mm (in)
3.80 (0.150)	3.85 (0.152)	3.90 (0.154)	3.95 (0.156)
4.00 (0.158)	4.05 (0.159)	4.10 (0.161)	4.15 (0.163)
4.20 (0.165)	4.25 (0.167)	4.30 (0.169)	4.35 (0.171)
4.40 (0.173)	4.45 (0.175)	4.50 (0.177)	4.55 (0.179)
4.60 (0.181)	4.65 (0.183)	4.70 (0.185)	4.75 (0.187)

Downloaded from www.Manualslib.com manuals search engine

OUTPUT GEAR
Preparation
SST

49 B017 1A0 Remover set, bearing	For removal of bearing inner race	49 F401 366A Plate (Part of 49 B017 1A0)	For removal of bearing inner race
49 G019 022 Attachment K	For removal of bearing inner race	49 G019 011 Installer, bearing	For installation of bearing inner race

03U0KX-327

Disassembly / Assembly
1. Disassemble in the order shown in the figure, referring to **Disassembly Note**.
2. Inspect all parts and repair or replace as necessary.
3. Assemble in the reverse order of disassembly, referring to **Assembly Procedure.**

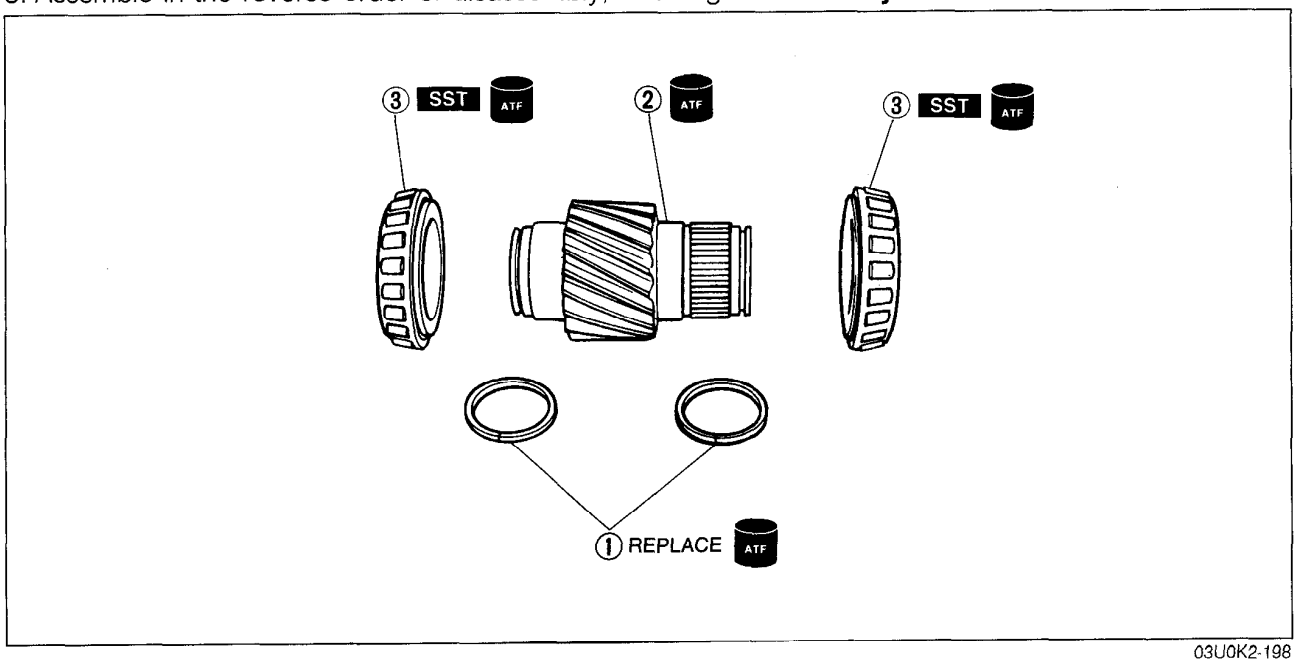

03U0K2-198

1. Seal rings
2. Output gear
   Inspect for wear and cracks
3. Bearings
   Disassembly note ..... page K2–205
   Inspect for wear and rough rotation

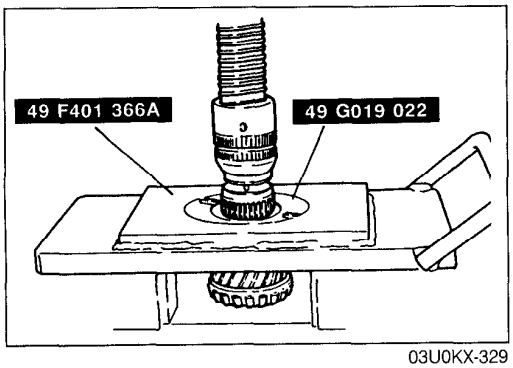

03U0KX-329

Disassembly note
Bearings
1. Remove the bearings from the output gear with the **SST**.

Downloaded from www.Manualslib.com manuals search engine

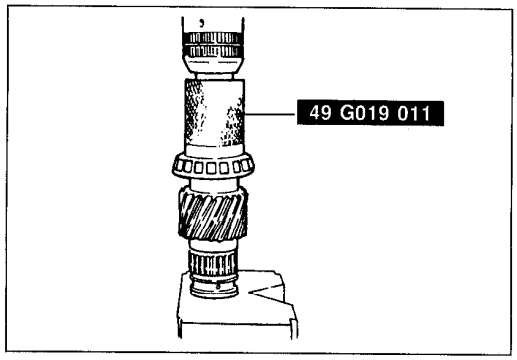

03U0KX-330

Assembly Procedure

Bearings

1. Press the output gear bearings onto the output gear with the **SST**.

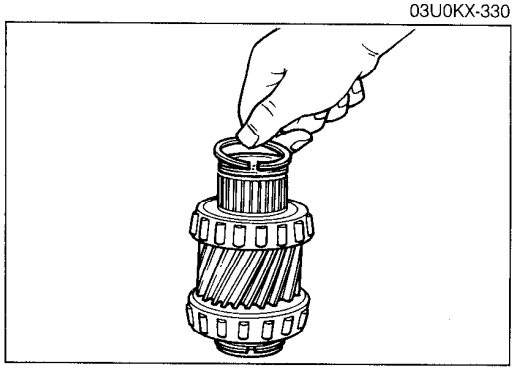

03U0KX-331

Seal rings

1. Install the seal rings to the output gear.

Downloaded from www.Manualslib.com manuals search engine

BEARING COVER ASSEMBLY

Preparation

SST

49 G019 017 Installer, oil seal	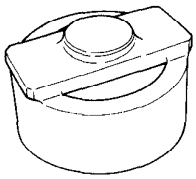	For installation of bearing outer race

03U0KX-332

Disassembly / Assembly

1. Disassemble in the order shown in the figure, referring to **Disassembly Note**.
2. Inspect all parts and repair or replace as necessary.
3. Assemble in the reverse order of diassembly, referring to **Assembly Procedure**.

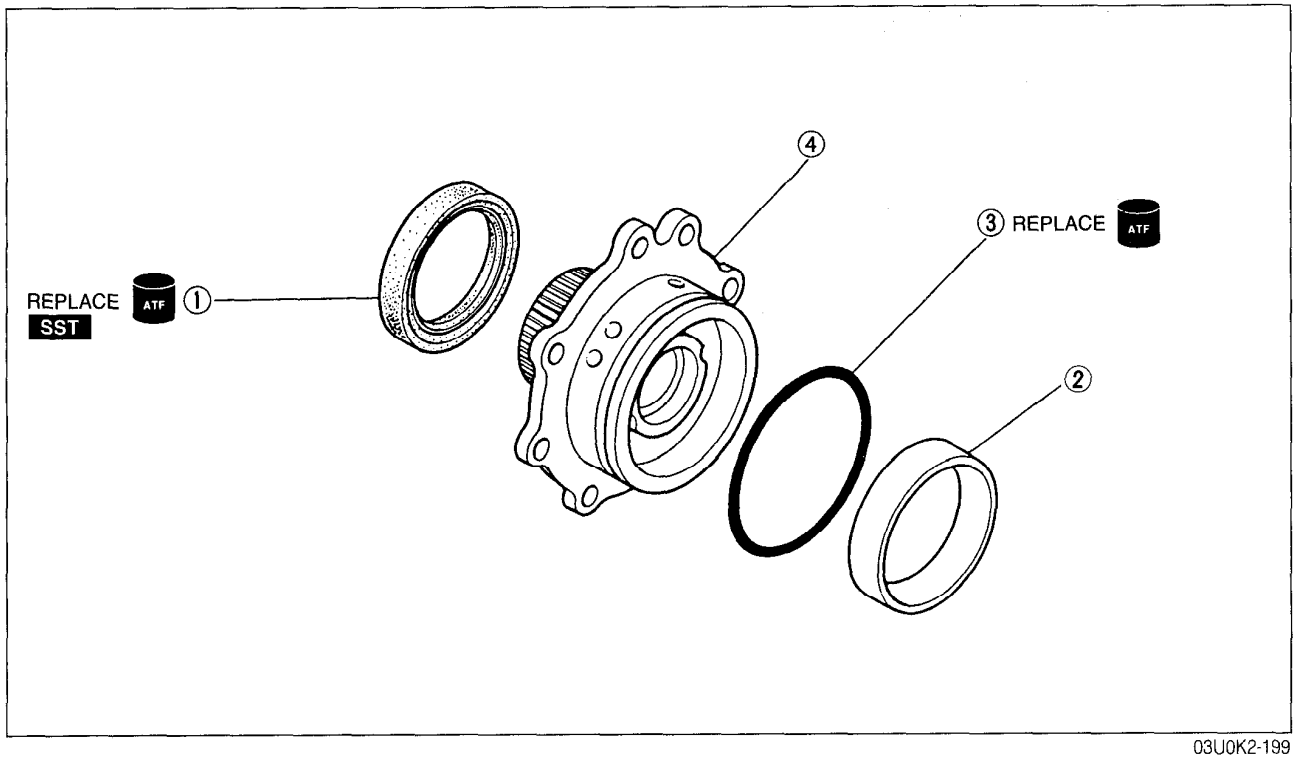

03U0K2-199

1. Oil seal
2. Bearing outer race
   Disassembly note ..... page K2–207
   Inspect bearing surface for scoring and scratches
3. O-ring
4. Bearing cover

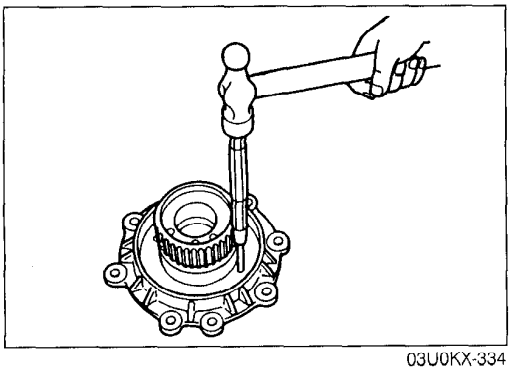

03U0KX-334

Disassembly note

Bearing outer race

1. Remove the bearing outer race with a pin punch and hammer as shown.

Downloaded from www.Manualslib.com manuals search engine

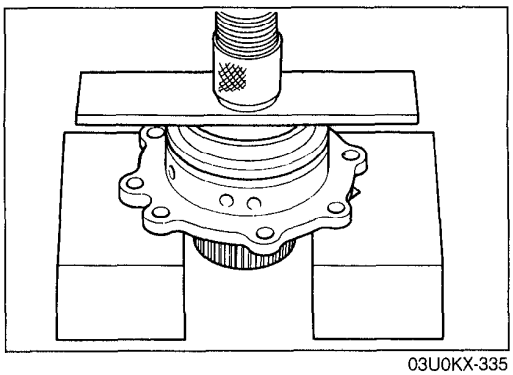

03U0KX-335

Assembly procedure

Bearing outer race

1. Press the bearing outer race into the cover.

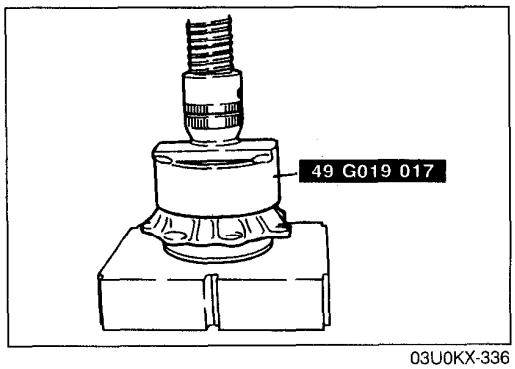

03U0KX-336

Oil seal

1. Press the oil seal into the cover with the **SST**.

Downloaded from www.Manualslib.com manuals search engine

CONTROL VALVE BODY (DISASSEMBLY / INSPECTION)
Disassembly / Inspection

Caution
- **Be especially careful when handling the control valve because it consists of the most precise and delicate parts of the transaxle.**
- **Neatly arrange the removed parts to avoid confusing the similar parts.**
- **Clean the removed parts with cleaning solvent, and dry them with compressed air. Clean out all holes and passages with compressed air.**

1. Disassemble in the order shown in the figure, referring to **Disassembly Procedure**.
2. Inspect all parts and repair or replace as necessary.

03U0K2-200

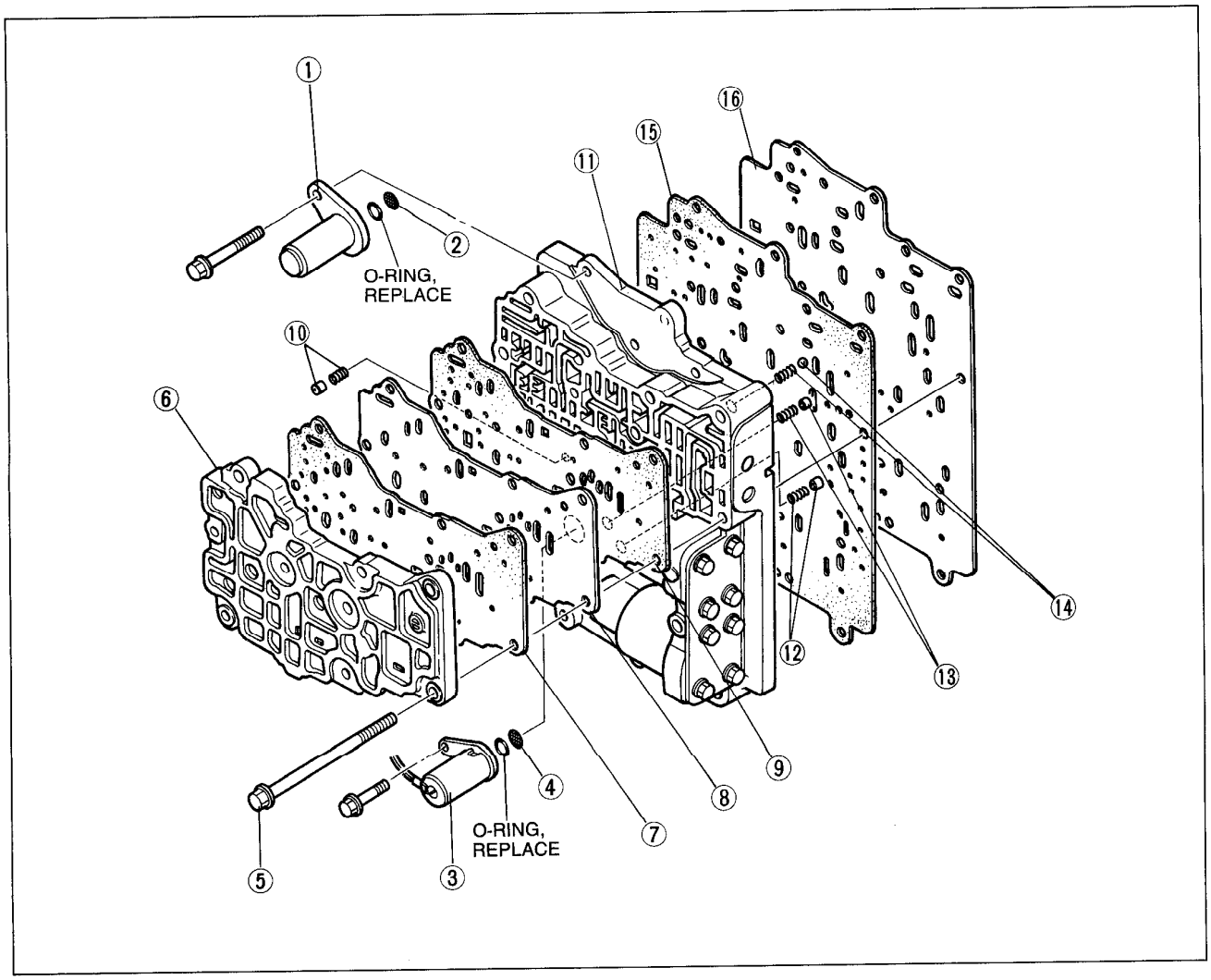

1. 1-2 solenoid valve
   Inspection ..... page K2–
2. Oil strainer
3. 2-3 solenoid valve
   Inspection ..... page K2–
4. Oil strainer
5. Bolts
6. Front control body
   Inspect for clogging and damage
7. Front/premain front gasket
8. Permain separator
9. Front premain rear gasket
10. Orifice check valve and spring
11. Premain control body
    Disassembly / Inspection / Assembly ..... page K2–214
12. Orifice check valve and spring
13. Orifice check valve and spring
14. Throttle relief ball and spring
15. Premain/main front gasket
16. Main separator

Downloaded from www.Manualslib.com manuals search engine

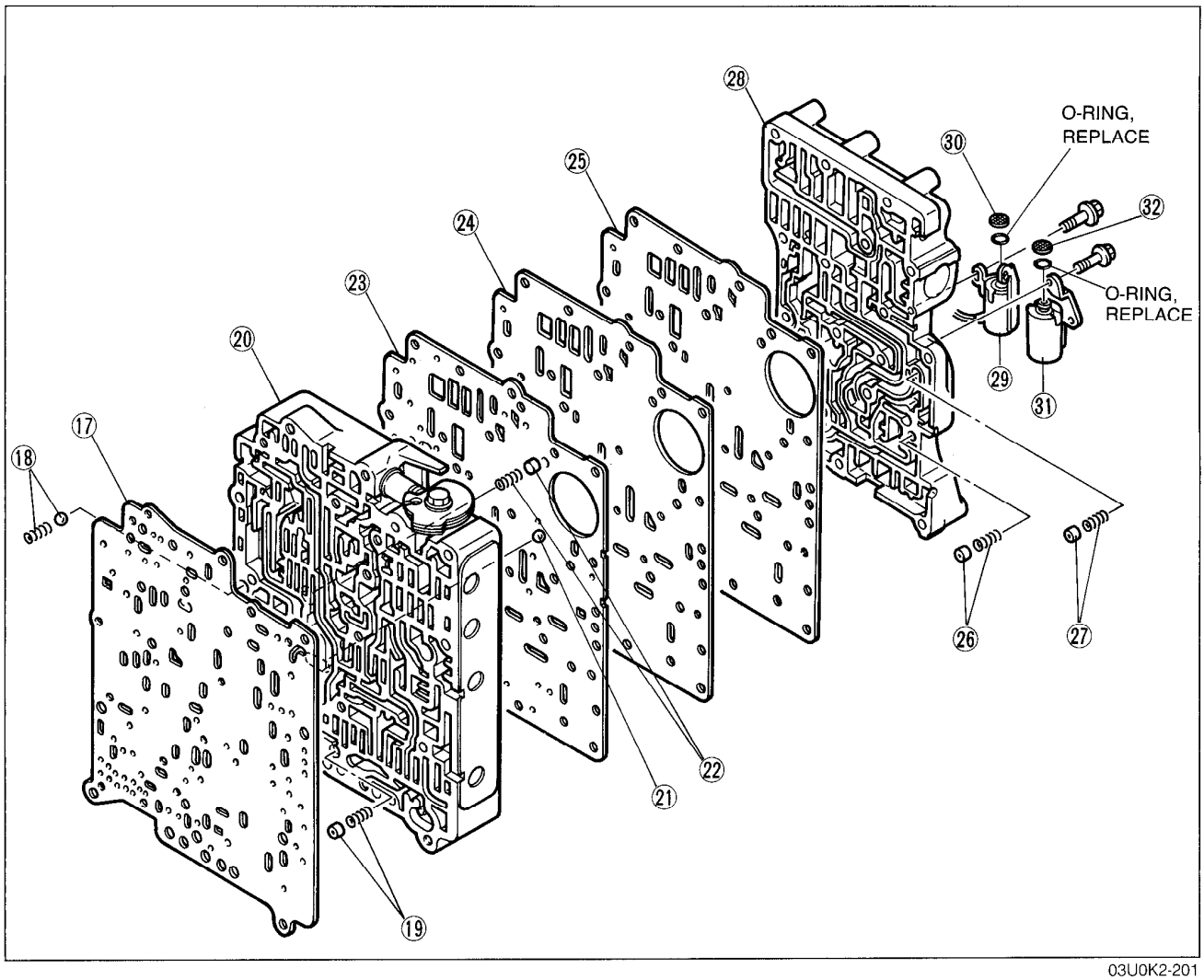

03U0K2-201

17. Premain/main rear gasket
18. Converter relief ball and spring
19. Orifice check valve and spring
20. Main control body
    Disassembly / Inspection / Assembly ..... page K2–218
21. Steel ball
22. Orifice check valve and spring
23. Main/rear front gasket
24. Rear separator
25. Main/rear rear gasket
26. Orfice check valve and spring
27. Orifice check valve and spring
28. Rear control valve body
    Disassembly / Inspection / Assembly ..... page K2–222
29. 3-4 solenoid valve
    Inspection ..... page K2–
30. Oil strainer
31. Lockup solenoid valve
    Inspection ..... page K2–
32. Oil strainer

Downloaded from www.Manualslib.com manuals search engine

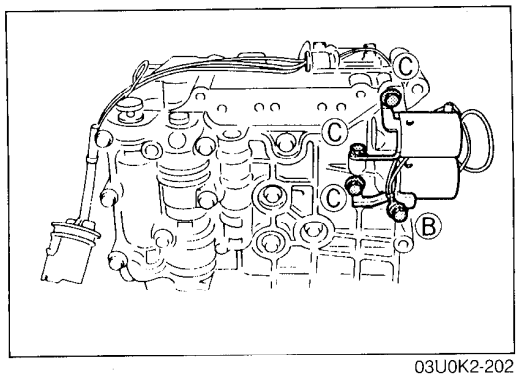

03U0K2-202

Disassembly Procedure

1. Remove the 3-4 solenoid valve and lockup solenoid valve.
2. Remove the O-rings and oil strainers.

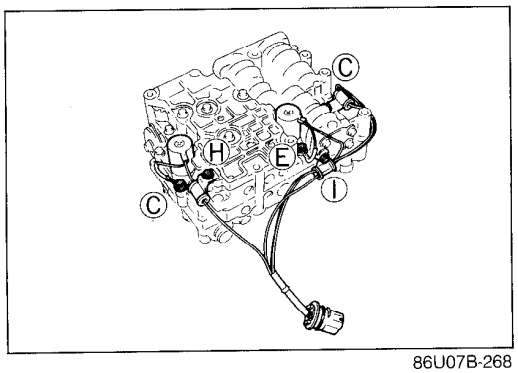

86U07B-268

3. Remove the 1-2 solenoid valve and 2-3 solenoid valve and wire harness.
4. Remove the O-rings and oil strainers.

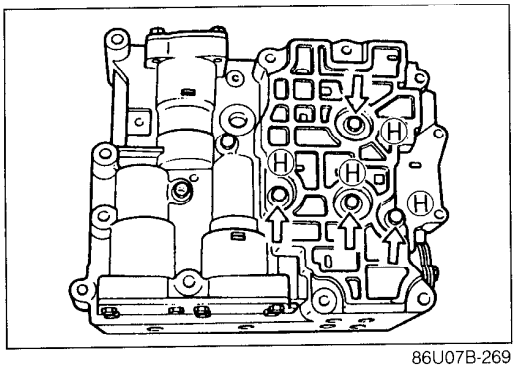

86U07B-269

5. Remove the front indicated bolts and pull out the front control body with premain separator as a unit.

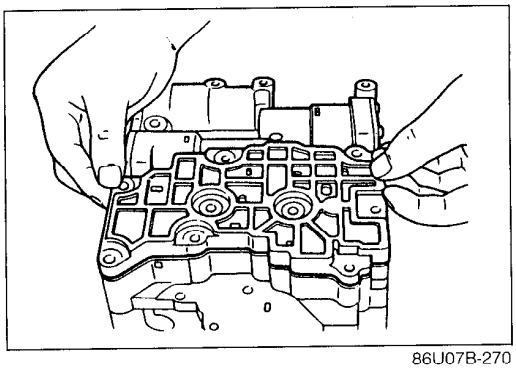

86U07B-270

6. Remove the front/premain gaskets and separator from the front control body.

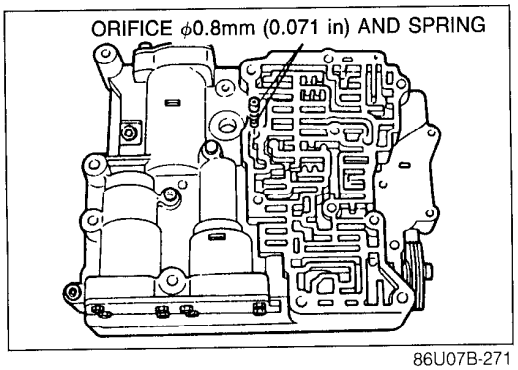

86U07B-271

7. Remove the orifice check valve (ϕ0.8mm, 0.071 in) and spring from the premain control body.

Downloaded from www.Manualslib.com manuals search engine

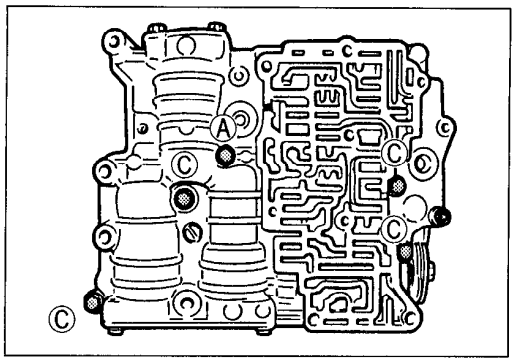

86U07B-272

8. Remove the bolts and hexagonal head bolt and remove the premain control body and the main separator as a unit.

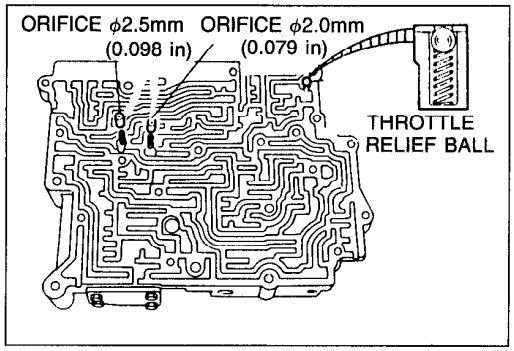

03U0K2-313

9. Remove the premain/main gaskets and separator from the premain control body.
10. Remove the orifice check valves (ϕ2.0mm, 0.079 in; ϕ2.5mm, 0.098 in) and springs, and the throttle relief ball and spring from the premain control body.

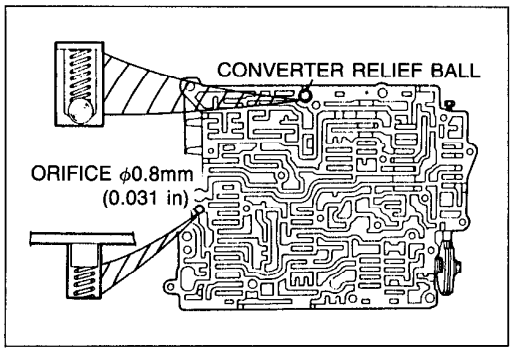

86U07B-274

11. Remove the converter relief ball and spring, and the orifice check valve (ϕ0.8mm, 0.031 in) and spring from the main control body.

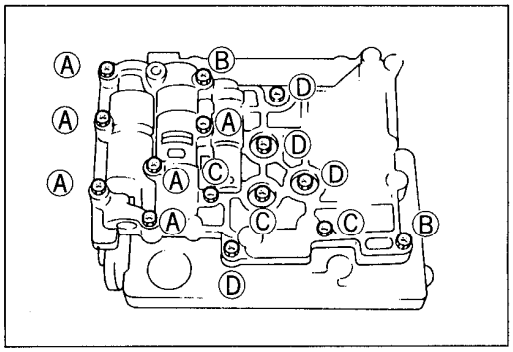

86U07B-275

12. Turn the assembly over and remove the bolts shown in the figure. Remove the rear separator as a unit.

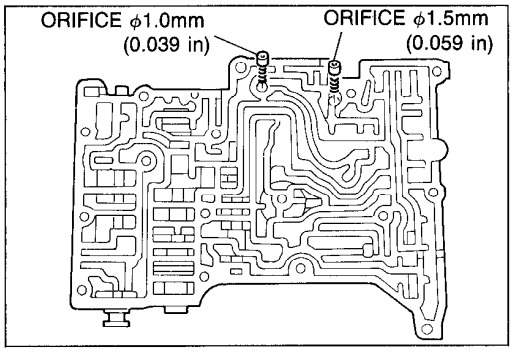

03U0K2-314

13. Remove the main/rear gaskets and separator from the rear control body.
14. Remove the orifice check valves (ϕ1.5mm, 0.059 in; ϕ1.0mm, 0.039 in) and spring from the rear control body.

Downloaded from www.Manualslib.com manuals search engine

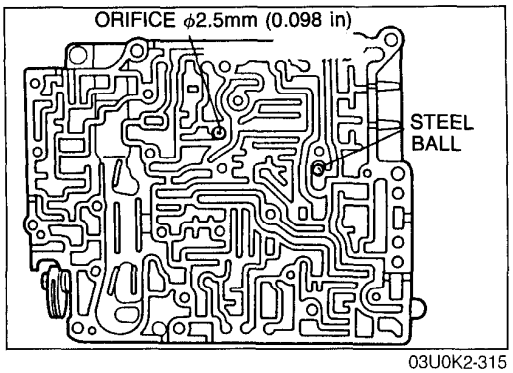

03U0K2-315

15. Remove the orifice check valve (ϕ2.5mm, 0.98 in) and spring and the steel ball from the main control body.

Downloaded from www.Manualslib.com manuals search engine

PREMAIN CONTROL VALVE BODY
Disassembly / Inspection / Assembly

Caution
- **Each valve should slide out/in under its own weight.**
- **When a valve will not slide out under its own weight, depending on the valve, push it out it with a wire or place the valve body open-side down and lightly tap it with a soft hammer. Never scratch or otherwise damage a valve surface or bore.**
- **Do not drop or lose the valves or internal parts.**
- **Before assembly, make sure all parts are thoroughly clean.**
- **Apply ATF to all parts and bores.**
- **Note the proper direction of the valves and internal parts.**
- **Do not reuse any part that has been dropped.**
- **Wrap a screwdriver or rod with a tape before using it to insert a valve.**

1. Disassemble in the order shown in the figure.
2. Inspect all parts and repair or replace as necessary.
3. Assemble in the reverse order of disassembly, referring to **Assembly Procedure**.

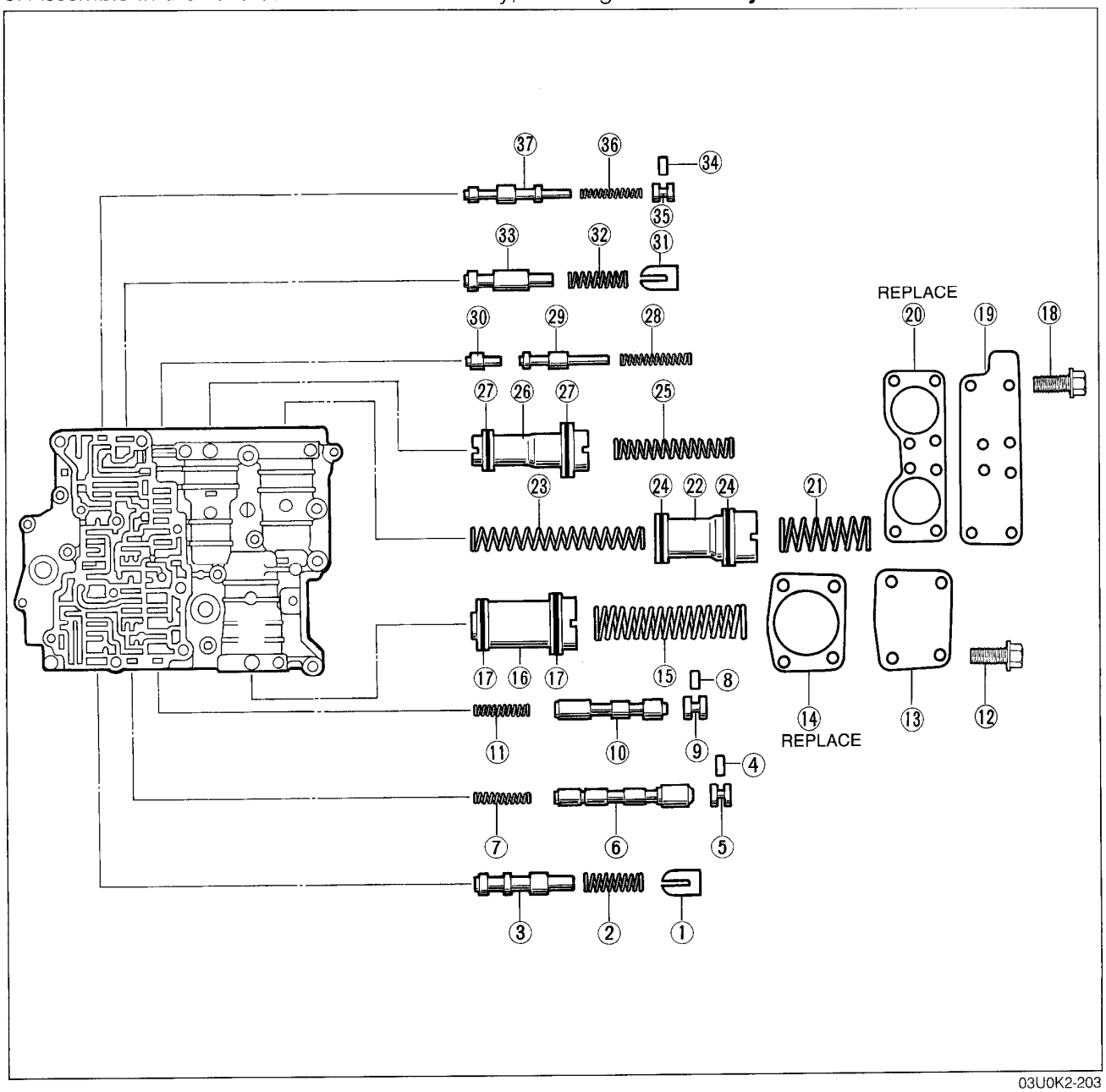

03U0K2-203

Downloaded from www.Manualslib.com manuals search engine

1. Retainer
2. 2-3 timing spring
   Inspection ..... page K2–215
3. 2-3 timing valve
   Inspect for sticking, scoring and scratches
4. Stop pin
5. Stop plug
6. Servo control valve
   Inspect for sticking, scoring and scratches
7. Servo control spring
   Inspection ..... page K2–215
8. Stop pin
9. Stop plug
10. Bypass valve
    Inspect for sticking, scoring and scratches
11. Bypass spring
    Inspection ..... page K2–215
12. Bolts
13. 1-2 accumulator plate
14. Gasket
15. 1-2 accumulator spring
    Inspection ..... page K2–215
16. 1-2 accumulator piston
17. 1-2 accumulator seal rings
18. Bolts
19. N-R accumulator plate
20. Gasket
21. N-R accumulator front spring
    Inspection ..... page K2–215
22. N-R accumulator piston
23. N-R accumulator rear spring
    Inspection K2–215
24. N-R accumulator seal rings
25. N-D accumulator front spring
    Inspection ..... page K2–215
26. N-D accumulator piston
27. N-D accumulator seal rings
28. Coasting bypass spring
    Inspection ..... page K2–215
29. Coasting bypass valve
    Inspect for sticking, and scratches
30. Coasting baypass plug
31. Retainer
32. 3-2 timing spring
    Inspection ..... page K2–215
33. 3-2 timing valve
    Inspect for sticking, scoring and scratches
34. Stop pin
35. Stop plug
36. 3-2 capacity valve
    Inspection ..... page K2–215
37. 3-2 capacity valve
    Inspect for sticking, scoring and scratches

03U0K2-204

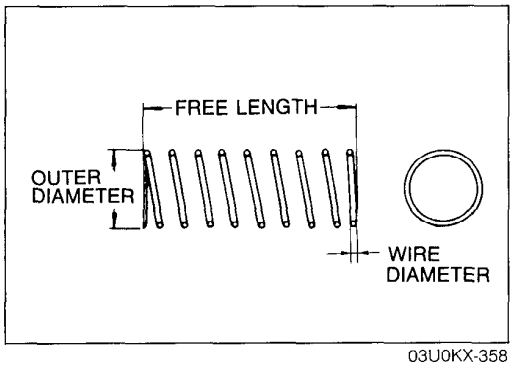

03U0KX-358

Inspection

1. Measure the spring free length.
2. If not within specification, replace the spring(s).

Spring \ Item	Outer dia. mm (in)	Free length mm (in)	Wire dia. mm (in)	Spring color
1-2 accumulator spring	16.0 (0.630)	72.1 (2.839)	2.2 (0.087)	—
Bypass, servo control spring	4.9 (0.193)	27.6 (1.087)	0.55 (0.022)	Yellow
2-3 timing spring	*6.7 (0.263)	26.5 (1.043)	0.8 (0.031)	—
N-R accumulator rear spring	11.1 (0.437)	62.0 (2.441)	1.2 (0.047)	Light greeen
N-D accumulator front spring	9.8 (0.386)	60.9 (2.398)	1.1 (0.043)	Yellow
Coasting bypass spring	5.8 (0.228)	37.7 (1.484)	0.6 (0.024)	Dark blue
3-2 timing spring	*6.6 (0.260)	28.6 (1.126)	0.8 (0.031)	Red
3-2 capacity spring	*4.4 (0.173)	30.6 (1.205)	0.5 (0.020)	White
Throttle relief ball spring	6.6 (0.260)	21.6 (0.850)	0.8 (0.031)	—

03U0K2-205

* Inner diameter

Downloaded from www.Manualslib.com manuals search engine

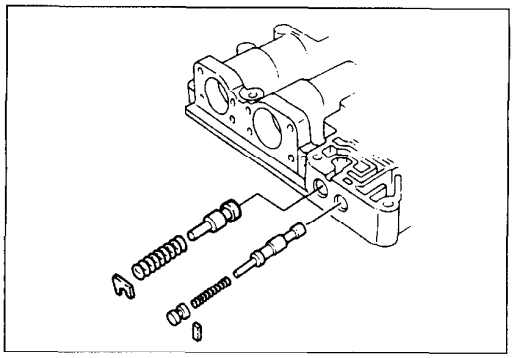

03U0K2-206

Assembly Procedure

1. Install the 3-2 capacity valve, 3-2 capacity spring, and stopper plug; then install the stopper pin.
2. Install the 3-2 timing valve, the 3-2 timing spring, and retainer.

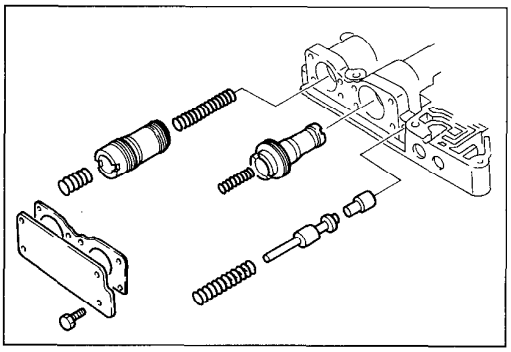

86U07B-281

3. Install the coasting bypass plug, coasting bypass valve and coasting bypass spring.
4. Apply ATF to the O-rings, and install them to the piston; then insert the N-R accumulator rear spring and N-R accumulator piston.
5. Apply ATF to the O-rings, and install them to the piston; then insert the N-D accumulator piston and N-D accumulator front spring.

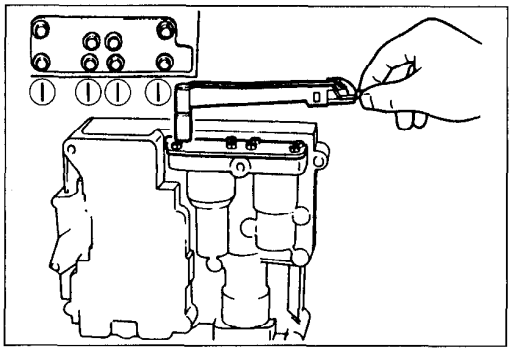

86U07B-282

6. Install the N-R accumulator gasket and plate; then tighten the plate.

Tightening torque:
6—8 N·m (66—80 cm-kg, 57—69 in-lb)

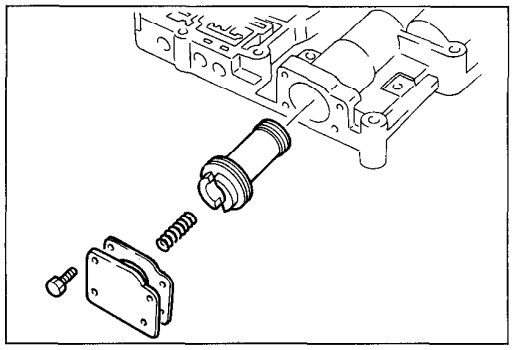

86U07B-283

7. Apply ATF to the O-rings, and install them onto the piston; then install the 1-2 accumulator piston and 1-2 accumulator springs.

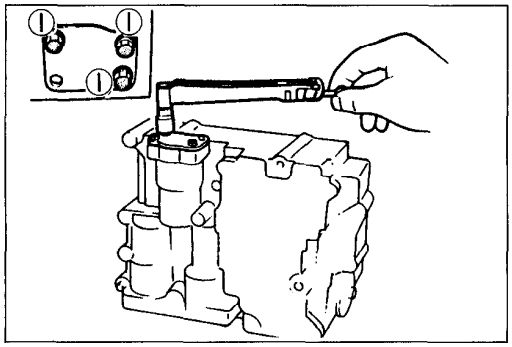

86U07B-284

8. Install the 1-2 accumulator gasket and plate; then tighten the plate.

Tightening torque:
6—8 N·m (66—80 cm-kg, 57—69 in-lb)

Downloaded from www.Manualslib.com manuals search engine

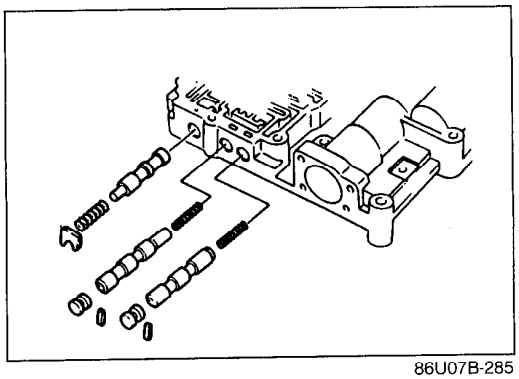

86U07B-285

9. Install the bypass spring, bypass valve, stopper plug, and stopper pin.
10. Install the servo control spring, servo control valve, stopper plug, and stopper pin.
11. Install the 2-3 timing valve, 2-3 timing spring, and retainer.

Downloaded from www.Manualslib.com manuals search engine

MAIN CONTROL VALVE BODY
Disassembly / Inspection / Assembly

Caution
- **Each valve should slide out/in under its own weight.**
- **When a valve will not slide out under its own weight, depending on the valve, push it out it with a wire or place the valve body open-side down and lightly tap it with a soft hammer. Never scratch or otherwise damage a valve surface or bore.**
- **Do not drop or lose the valves or internal parts.**
- **Before assembly, make sure all parts are thoroughly clean.**
- **Apply ATF to all parts and bores.**
- **Note the proper direction of the valves and internal parts.**
- **Do not reuse any part that has been dropped.**
- **Wrap a screwdriver or rod with a tape before using it to insert a valve.**

1. Disassemble in the order shown in the figure.
2. Inspect all parts and repair or replace as necessary.
3. Assemble in the reverse order of disassembly, referring to **Assembly Procedure**.

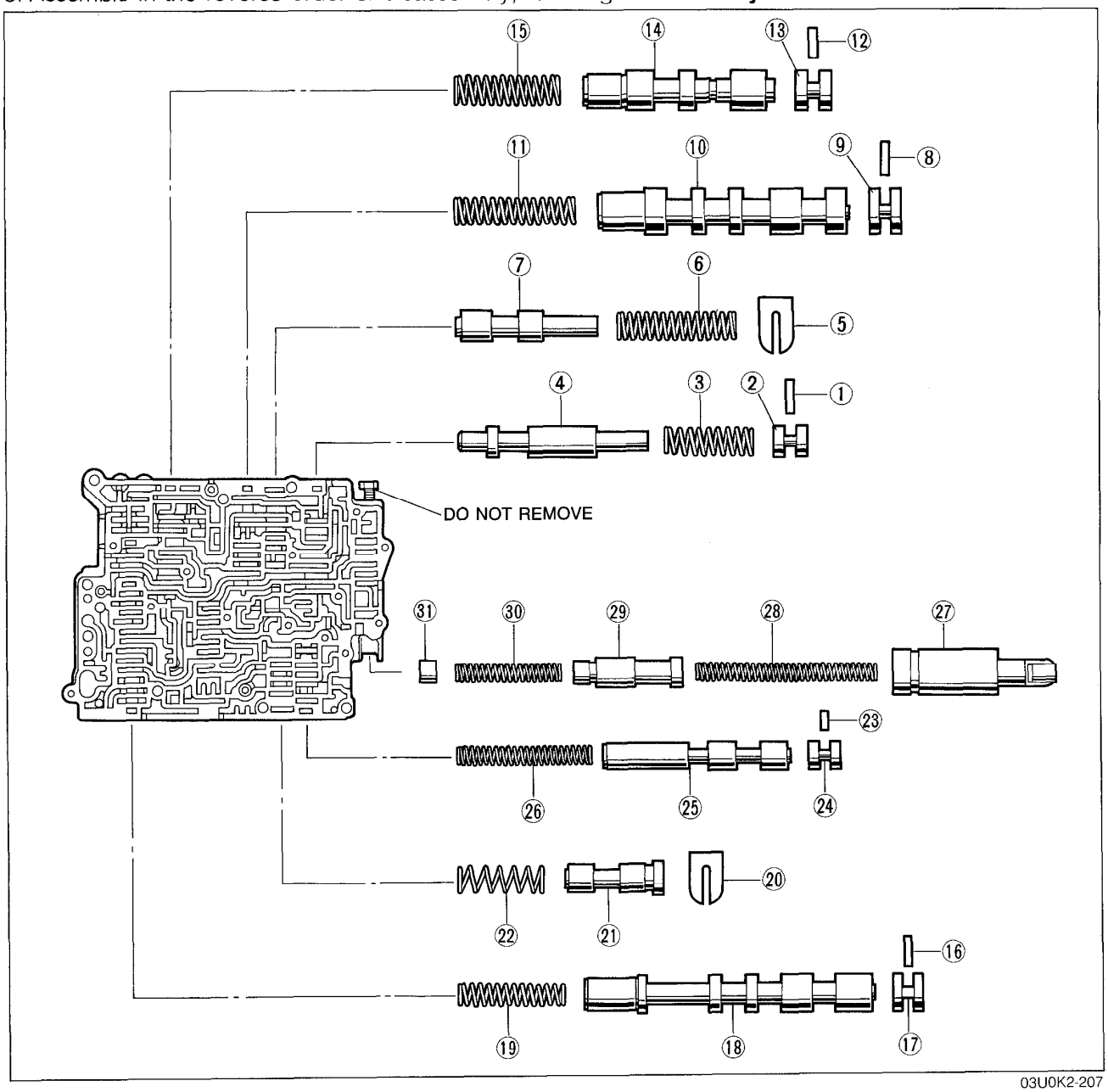

03U0K2-207

Downloaded from www.Manualslib.com manuals search engine

1. Stop pin
2. Stop plug
3. Pressure modifier spring
   Inspection ..... page K2–219
4. Pressure modifier valve
   Inspect for sticking, scoring and scratches
5. Retainer
6. Low reducing spring
   Inspection ..... page K2–219
7. Low reducing valve
   Inspect for sticking, scoring and scratches
8. Stop pin
9. Stop plug
10. 1-2 shift valve
    Inspect for sticking, scoring and scratches
11. 1-2 shift spring
    Inspection ..... page K2–219
12. Stop pin
13. Stop plug
14. 2-3 shift valve
    Inspect for sticking, scoring and scratches
15. 2-3 shift spring
    Inspection ..... page K2–219
16. Stop pin
17. Stop plug
18. 3-4 shift valve
    Inspect for sticking, scoring and scratches
19. 3-4 shift spring
    Inspection ..... page K2–219
20. Retainer
21. Throttle back-up valve
    Inspect for sticking, scoring and scratches
22. Throttle back-up spring
    Inspection K2–219
23. Stop pin
24. Stop plug
25. Throttle modulator valve
    Inspect for sticking, scoring and scratches
26. Throttle modulator spring
    Inspection ..... page K2–219
27. Throttle plug assembly
    Inspect for sticking, scoring and scratches
28. Throttle spring
    Inspection ..... page K2–219
29. Throttle valve
    Inspect for sticking, scoring and scratches
30. Throttle assist spring
    Inspection ..... page K2–219
31. Throttle adjust plug

03U0K2-208

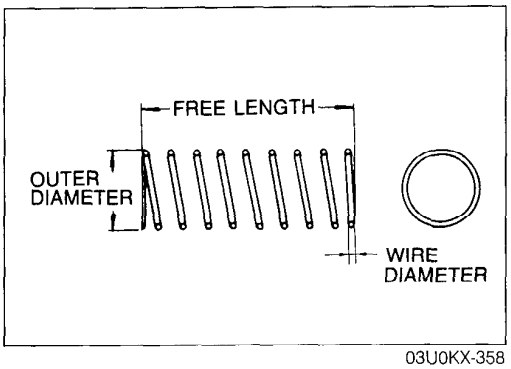

03U0KX-358

Inspection

1. Measure the spring free length.
2. If not within specification, replace the spring(s).

Spring \ Item	Outer dia. mm (in)	Free length mm (in)	No. of coils	Wire dia. mm (in)
Pressure modifier spring	8.3 (0.327)	26.5 (1.043)	0.8 (0.031)	—
Low reducing spring	8.7 (0.343)	38.3 (1.508)	0.9 (0.035)	Black
1-2 shift spring	8.7 (0.343)	41.3 (1.626)	1.0 (0.039)	Yellow
2-3, 3-4 shift spring	7.4 (0.291)	36.6 (1.441)	0.8 (0.031)	Gray
Throttle back-up spring	9.65 (0.380)	26.9 (1.059)	0.55 (0.022)	Red
Throttle modulator spring	6.3 (0.248)	47.9 (1.886)	0.8 (0.031)	—
Throttle assist spring	5.15 (0.203)	32.3 (1.272)	0.55 (0.022)	Dark green
Throttle spring	5.4 (0.213)	47.2 (1.858)	0.8 (0.031)	Pink
Converter relief ball spring	*5.1 (0.200)	24.1 (0.949)	0.9 (0.035)	Maroon
Orifice check valve spring	5.0 (0.197)	12.5 (0.492)	0.23 (0.009)	—

03U0K2-209

Downloaded from www.Manualslib.com manuals search engine

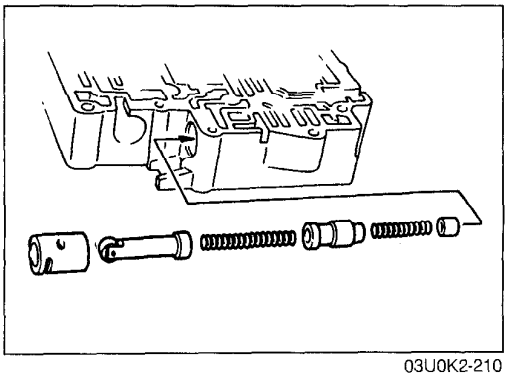

03U0K2-210

Assembly Procedure

1. Install the throttle adjust plug, throttle assist spring, throttle valve, and throttle plug assembly.

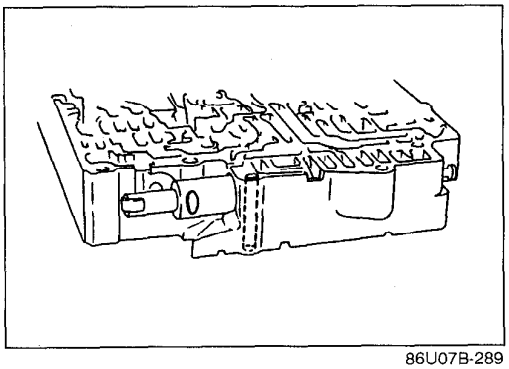

86U07B-289

Caution

- **Install the throttle plug assembly with the groove aligned with the bolt hole.**

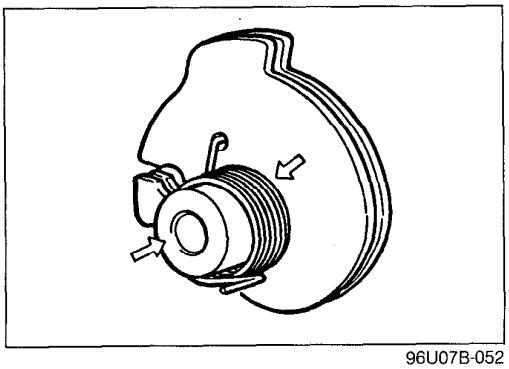

96U07B-052

2. Install the throttle return spring as shown.
3. Install the throttle lever assembly to the main control body.

Tightening torque:
8—11 N·m (80—110 cm-kg, 69—95 in-lb)

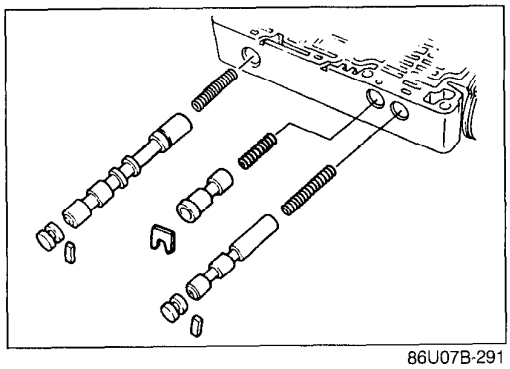

86U07B-291

4. Install the throttle modulator spring, throttle modulator valve, stopper plug, and stopper pin.
5. Install the throttle backup spring, throttle back valve, and retainer.
6. Install the 3-4 shift spring, 3-4 shift valve, stopper plug, and stopper pin.

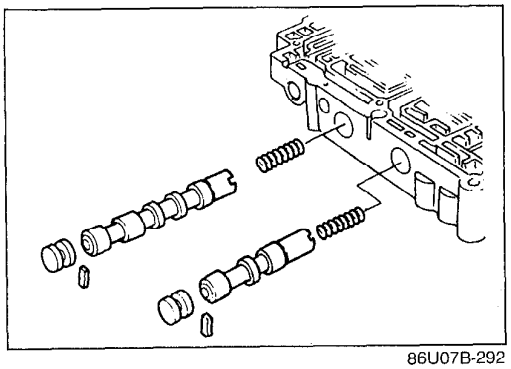

86U07B-292

7. Install the 2-3 shift spring, 2-3 shift valve, stopper plug, and stopper pin.
8. Install the 1-2 shift spring, 1-2 shift valve, stopper plug, and stopper pin.

Downloaded from www.Manualslib.com manuals search engine

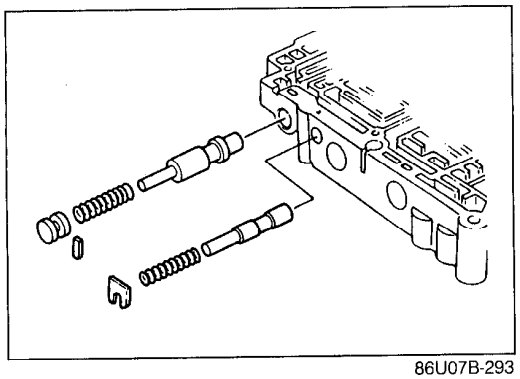

86U07B-293

9. Install the low reducing valve, low reducing spring, and retainer.
10. Install the pressure modifier valve, pressure modifier spring, stopper plug, and stopper pin.

Downloaded from www.Manualslib.com manuals search engine

REAR CONTROL VALVE BODY
Disassembly / Inspection / Assembly

Caution
- **Each valve should slide out/in under its own weight.**
- **When a valve will not slide out under its own weight, depending on the valve, push it out it with a wire or place the valve body open-side down and lightly tap it with a soft hammer. Never scratch or otherwise damage a valve surface or bore.**
- **Do not drop or lose the valves or internal parts.**
- **Before assembly, make sure all parts are thoroughly clean.**
- **Apply ATF to all parts and bores.**
- **Note the proper direction of the valves and internal parts.**
- **Do not reuse any part that has been dropped.**
- **Wrap a screwdriver or rod with a tape before using it to insert a valve.**

1. Disassemble in the order shown in the figure.
2. Inspect all parts and repair or replace as necessary.
3. Assemble in the reverse order of disassembly, referring to **Assembly Procedure**.

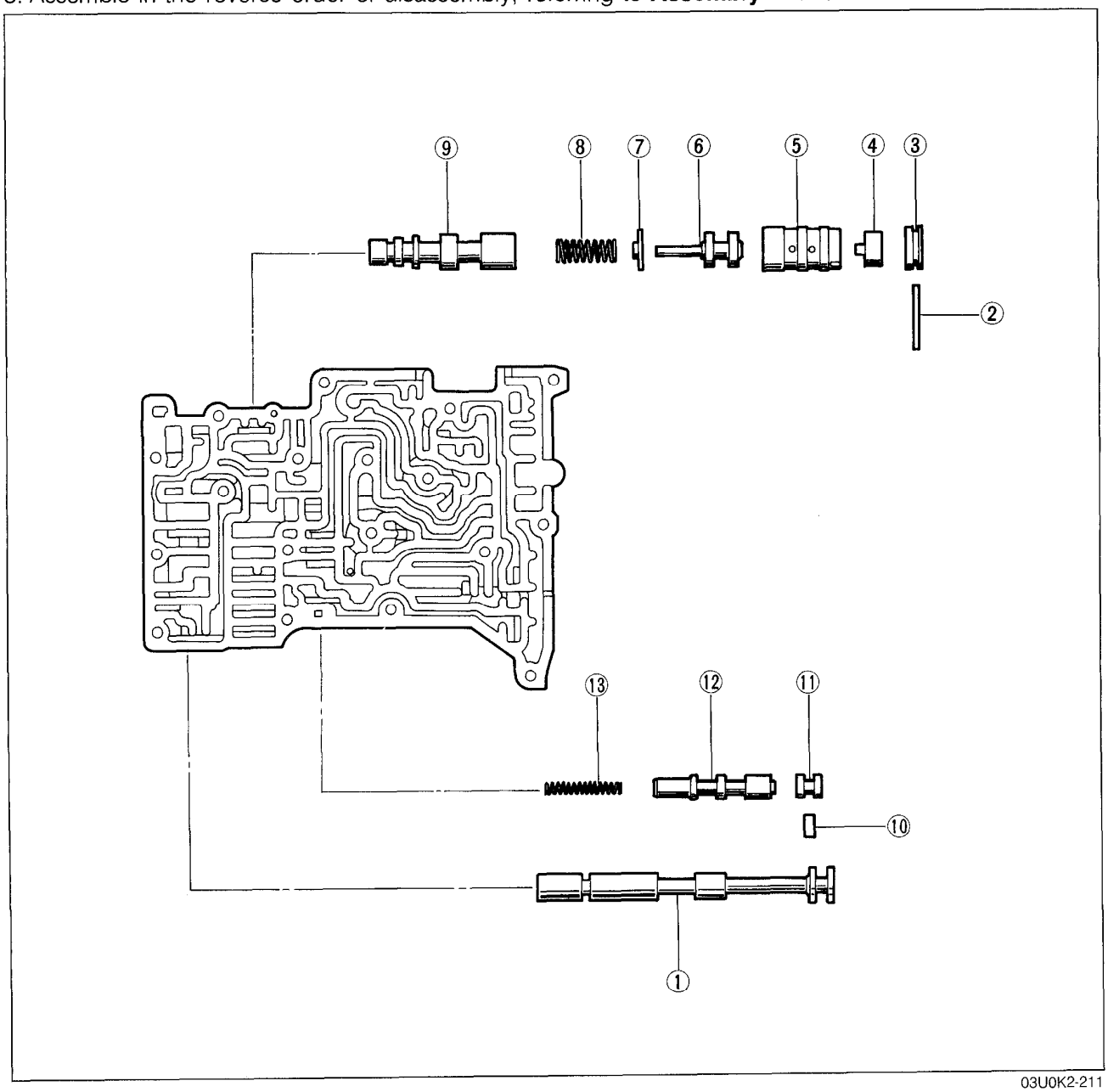

03U0K2-211

Downloaded from www.Manualslib.com manuals search engine

1. Manual valve
   Inspect for sticking, scoring and scratches
2. Stop pin
3. Stop pin
4. Pressure regulator backup plus
5. Pressure regulator plug sleeve
6. Pressure regulator plug
7. Pressure regulator spring seat
8. Pressure regulator spring
   Inspection ..... page K2–223
9. Pressure regulator valve
   Inspect for sticking, scoring and scratches
10. Stop pin
11. Stop plug
12. Lockup control valve
    Inspect for sticking, scoring and scratches
13. Lockup control spring
    Inspection ..... page K2–223

03U0K2-212

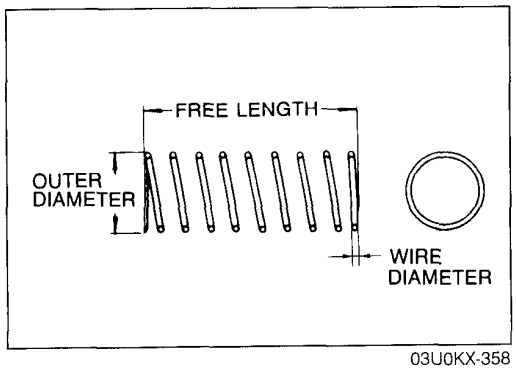

03U0KX-358

Inspection

1. Measure the spring free length.
2. If not within specification, replace the spring(s).

Spring \ Item	Outer dia. mm (in)	Free length mm (in)	Wire diameter mm (in)	Spring color
Pressure regulator spring	11.5 (0.452)	26.5 (1.043)	1.0 (0.039)	Maroon
Lockup control spring	5.0 (0.196)	35.2 (1.386)	0.6 (0.024)	Purple

03U0K2-213

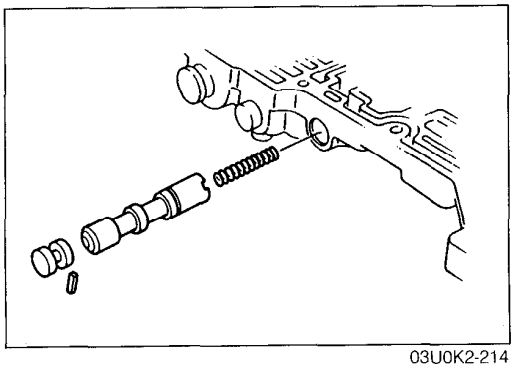

03U0K2-214

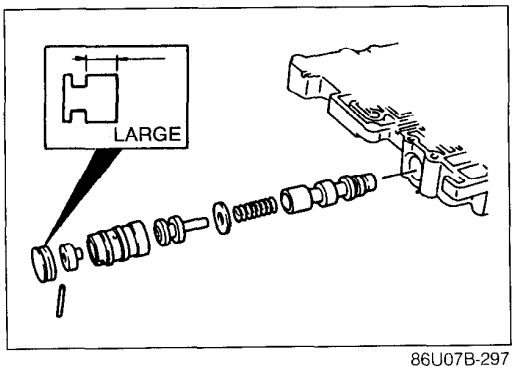

86U07B-297

Assembly Procedure

1. Install the lockup control spring, lockup control valve, stopper plug, and stopper pin.

2. Install the pressure regulator valve, pressure regulator spring, pressure regulator spring seat, pressure regulator plug, pressure regulator plug sleeve, pressure regulator backup plug, stopper plug, and stopper pin.

Note
- **Install the stopper plug larger end first.**

Downloaded from www.Manualslib.com manuals search engine

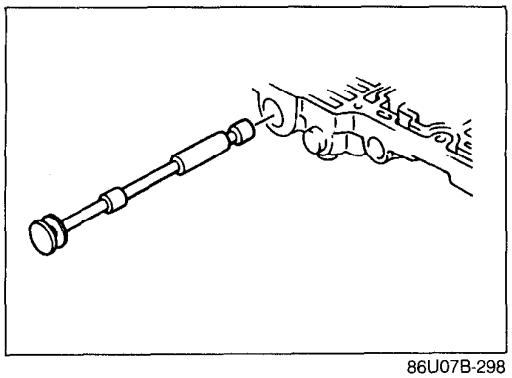

86U07B-298

3. Install the manual valve.

Downloaded from www.Manualslib.com manuals search engine

CONTROL VALVE BODY (ASSEMBLY)
Assembly

Caution
- **Before assembly, make sure all parts are perfectly clean.**
- **Apply ATF to all parts.**
- **Do not reuse the gaskets or O-rings.**

1. Assemble as shown in the figure, referring to **Assembly Procedure**.

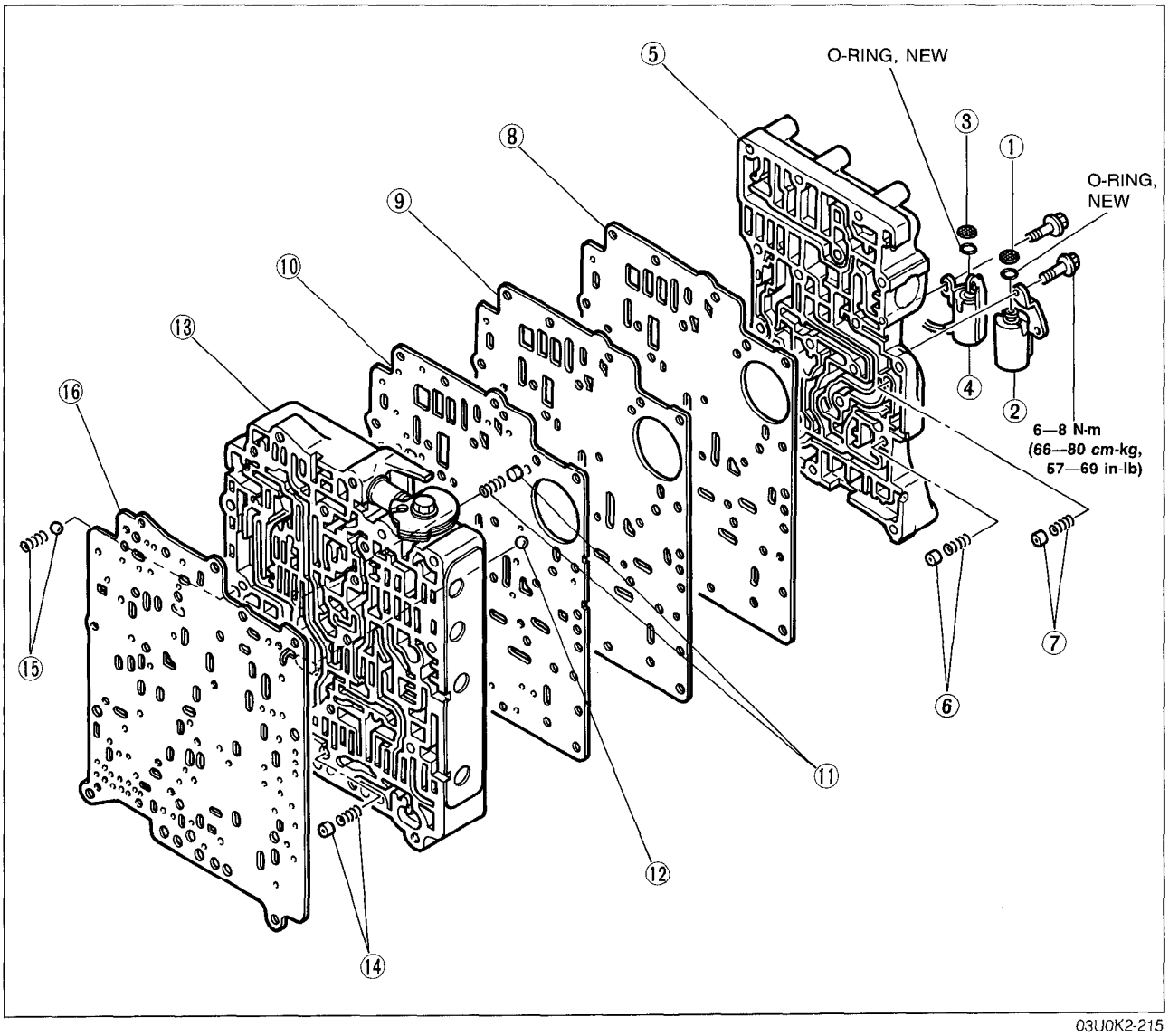

03U0K2-215

1. Oil strainer
2. Lockup solenoid valve
3. Oil strainer
4. 3-4 solenoid valve
5. Rear control valve body
   Bolt installation position ..... page K2–229
6. Orifice check valve and spring
   Installation position ..... page K2–228
7. Orifice check valve and spring
   Installation position ..... page K2–228
8. Main/rear rear gasket
9. Rear separator
10. Main/rear front gasket
11. Orifice check valve and spring
    Installation position ..... page K2–228
12. Steel ball
    Installation position ..... page K2–228
13. Main control valve body
    Bolt installation position ..... page K2–229
14. Orifice check valve and spring
    Installation position ..... page K2–228
15. Converter relief ball and spring
    Installation position ..... page K2–228
16. Premain/main rear gasket

Downloaded from www.Manualslib.com manuals search engine

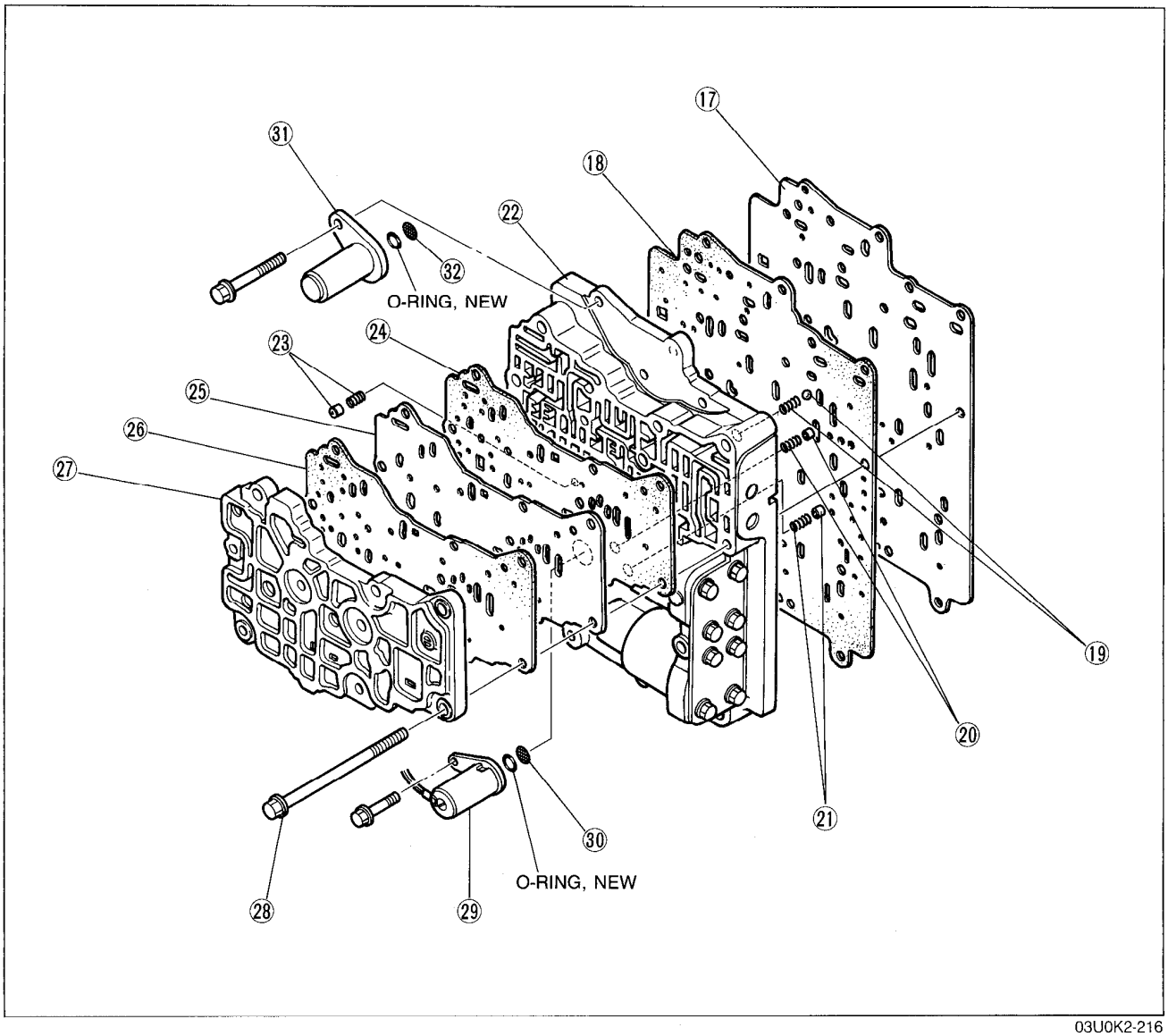

03U0K2-216

17. Main separator
18. Premain/main front gasket
19. Throttle relief ball and spring
    Installation position ..... page K2–227
20. Orifice check valve and spring
    Installation position ..... page K2–227
21. Orifice check valve and spring
    Installation position ..... page K2–227
22. Premain control body
    Bolt installation position ..... page K2–229
23. Orifice check valve and spring
    Installation position ..... page K2–227
24. Front/premain rear gasket
25. Premain separator
26. Front/premain front gasket
27. Front control body
    Bolt installation position ..... page K2–229
28. Bolts
29. 2-3 solenoid valve
30. Oil strainer
31. 1-2 solenoid valve
32. Oil strainer

Downloaded from www.Manualslib.com manuals search engine

Installation positions

PREMAIN CONTROL VALVE BODY

(MAIN CONTROL VALVE BODY SIDE)

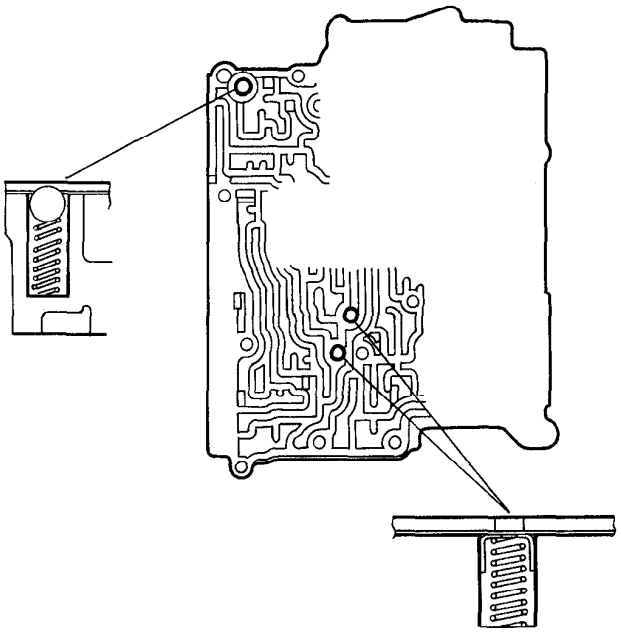

(FRONT CONTROL BODY SIDE)

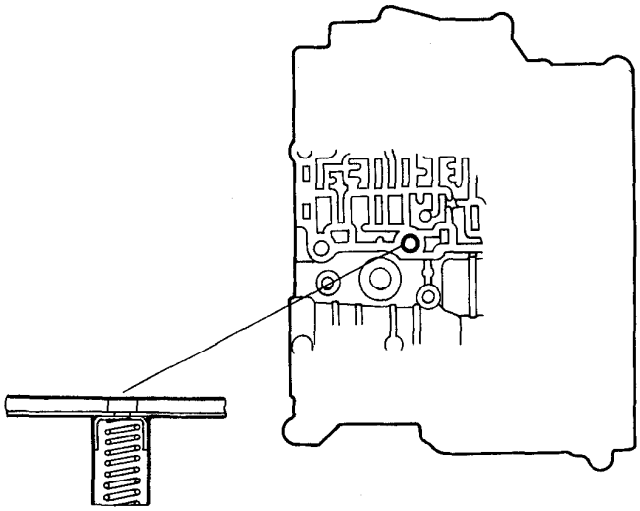

03U0K2-217

Downloaded from www.Manualslib.com manuals search engine

MAIN CONTROL VALVE BODY

(REAR CONTROL VALVE BODY SIDE)

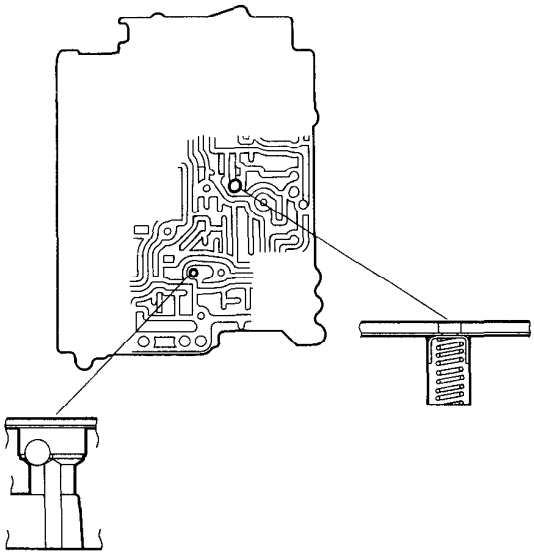

(PREMAIN CONTROL VALVE BODY SIDE)

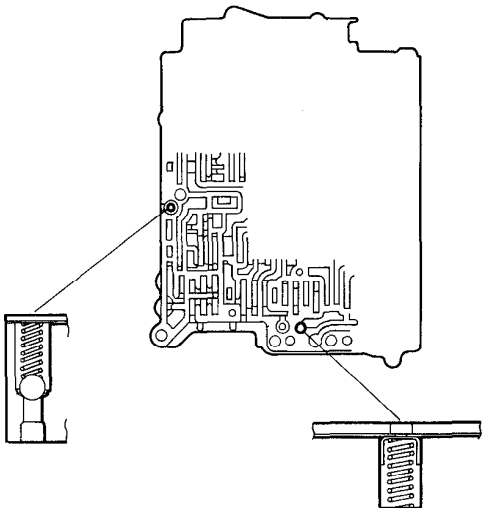

REAR CONTROL VALVE BODY

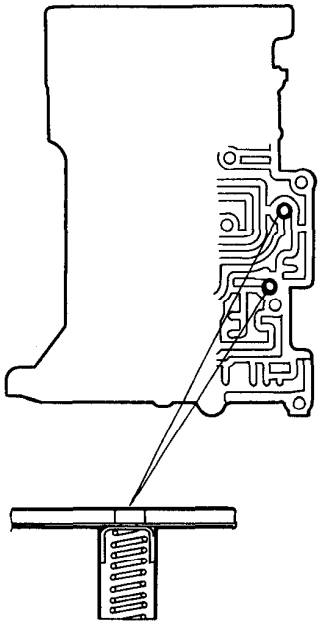

03U0KX-378

Downloaded from www.Manualslib.com manuals search engine

Bolt installation positions and external parts locations

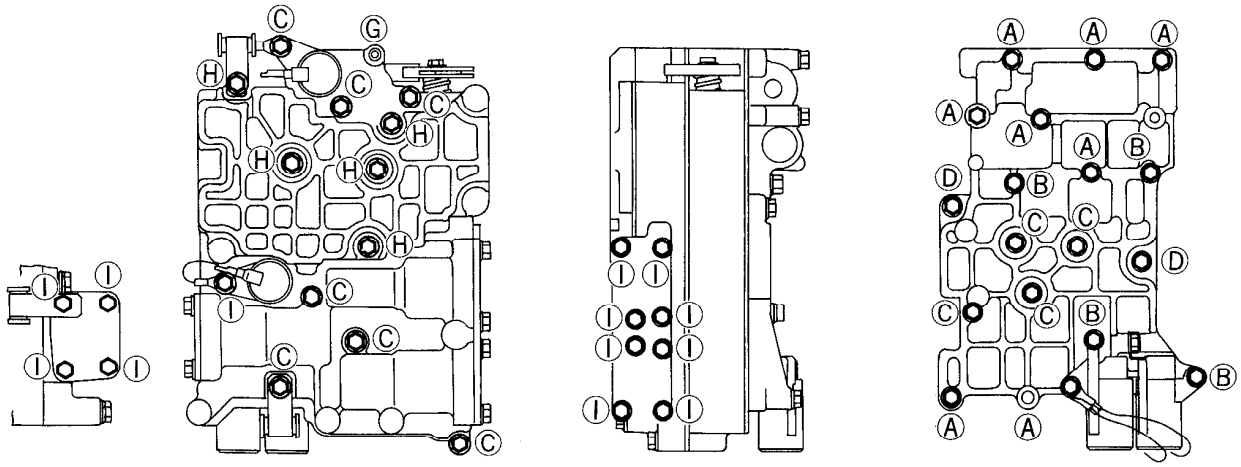

03U0KX-379

Indentification mark	Bolt	Length mm (in)	Tightening torque N·m (cm-kg, in-lb)
H		50 (1.969)	7.8—11 (80—110, 69—95)
A		40 (1.575)	
B		35 (1.378)	
C		25 (0.984)	
D		20 (0.787)	
I		16 (0.630)	
G	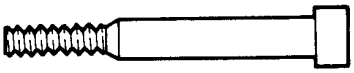	—	

03U0K2-316

Downloaded from www.Manualslib.com manuals search engine

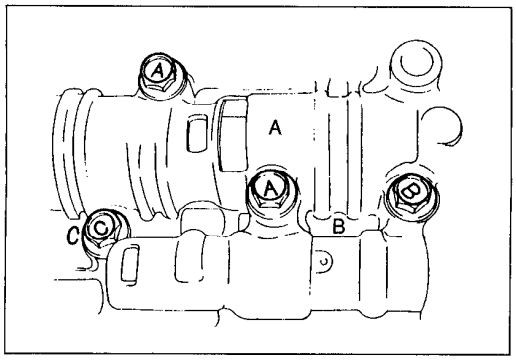

03U0K2-218

Assembly Procedure

Note
- **Do not mix-up the front and rear gaskets during assembly.**
- **Match the bolt head letter and the control valve body letter.**

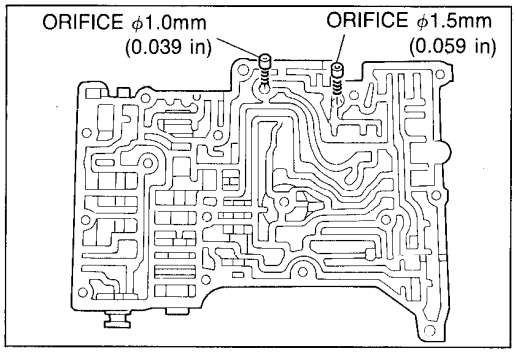

03U0K2-317

1. Install the orifice check valves (ϕ1.5mm, 0.059 in; ϕ1.0mm, 0.039 in) and springs in the rear control body as shown.

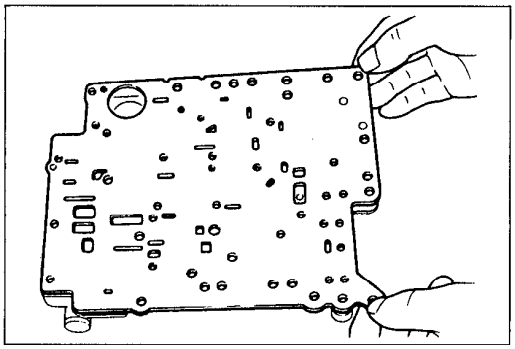

86U07B-301

2. Install the gaskets on both sides of the rear separator; then install it onto the rear control body.

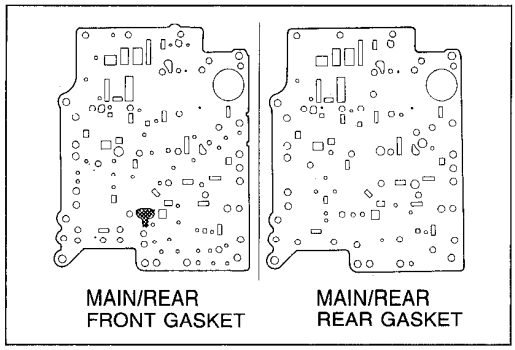

86U07B-302

Note
- **The main/rear rear gasket and main/rear front gasket are not interchangeable.**

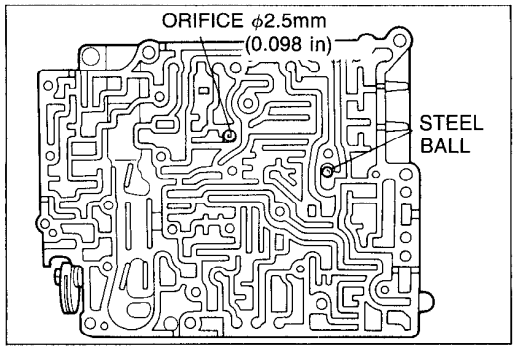

03U0K2-318

3. Install the orifice check valve (ϕ2.5mm, 0.098 in) and spring, and the steel ball in the main control body as shown.

Downloaded from www.Manualslib.com manuals search engine

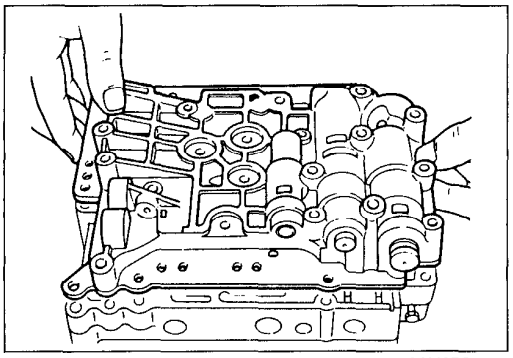

86U07B-304

4. Install the rear control body to the main control body.

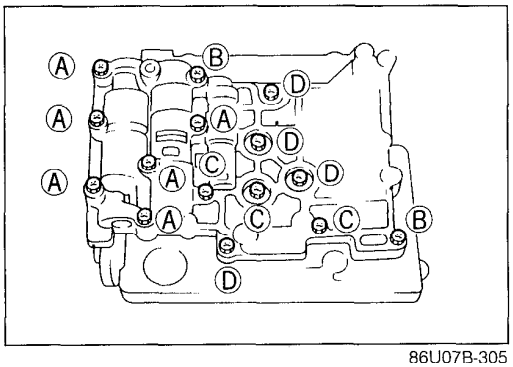

86U07B-305

Note
- **Match the bolt head letter as shown.**

5. Loosely tighten the bolts.

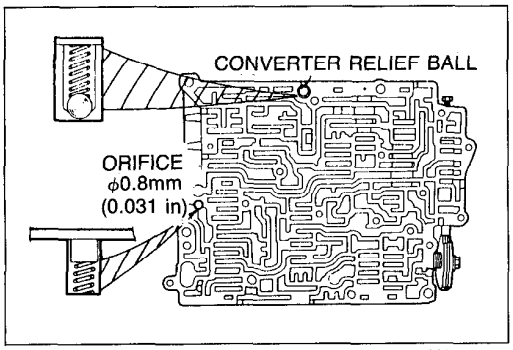

86U07B-306

6. Turn the assembly over and install the orifice check valve (ϕ0.8mm, 0.031 in) and spring, and the converter relief ball and spring in the main control body as shown.

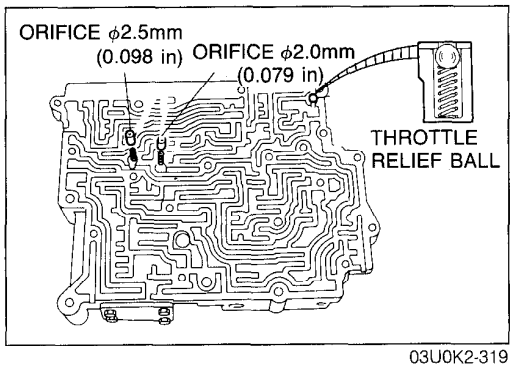

03U0K2-319

7. Install the orifice check valves (ϕ2.0mm, 0.079 in; ϕ2.5mm, 0.098 in) and springs, and the throttle relief ball and spring in the premain control body as shown.

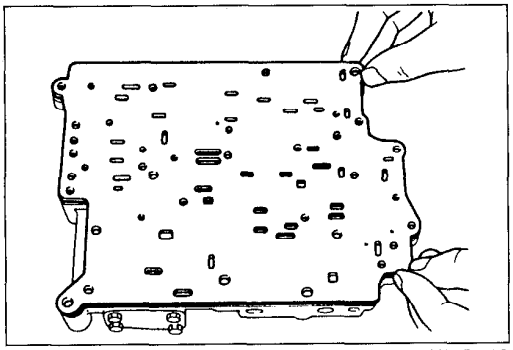

86U07B-308

8. Install the gaskets on both sides of the main separator; then install it onto the premain control body.

Downloaded from www.Manualslib.com manuals search engine

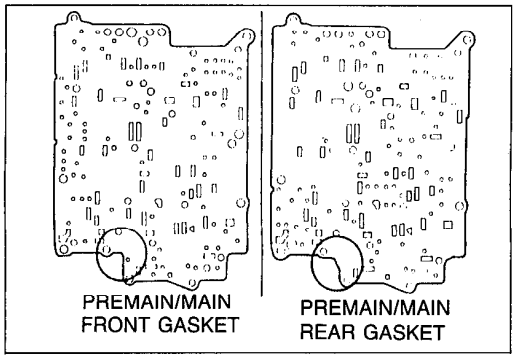

86U07B-309

Note
- **The premain/main rear gasket and premain/main front gasket are not interchangeable.**

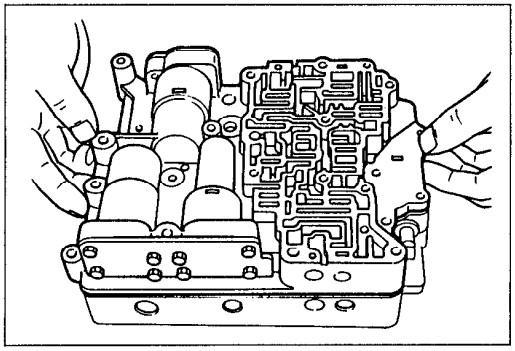

86U07B-310

9. Set the premain control body onto the main control body.

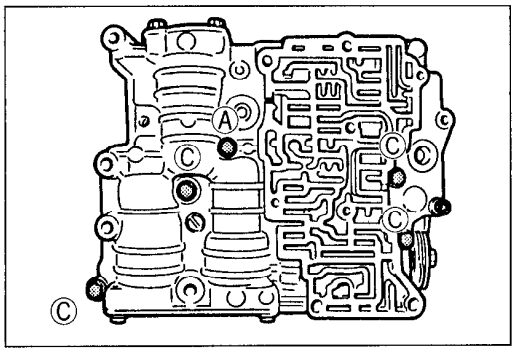

86U07B-311

Note
- **Match the bolt head letter as shown.**

10. Loosely tighten the bolts.

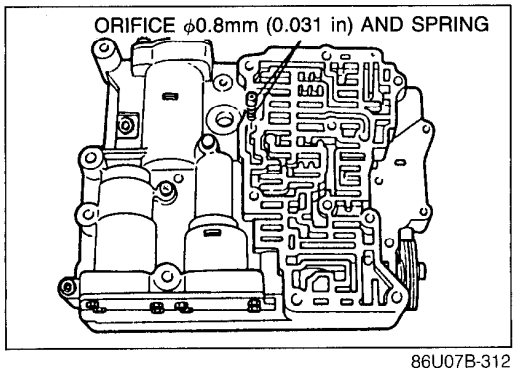

86U07B-312

11. Install the orifice check valve (ϕ0.8mm, 0.071 in) and spring in the premain control body as shown.

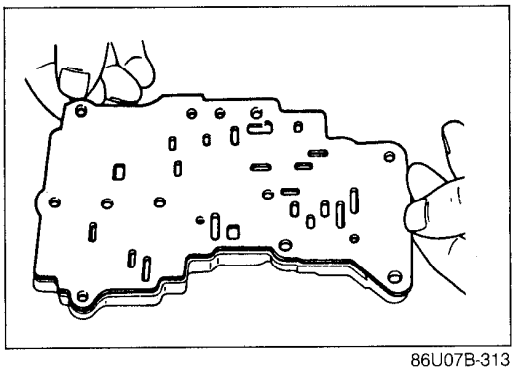

86U07B-313

12. Install the gaskets on both sides of the premain separator; then install it onto the front control body.

Downloaded from www.Manualslib.com manuals search engine

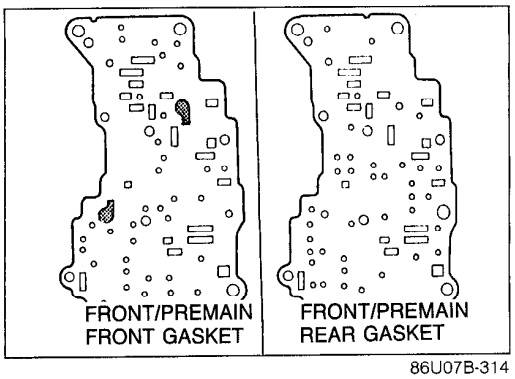

86U07B-314

Note
- **The front/premain front gasket and front/premain rear gasket are not interchangeable.**

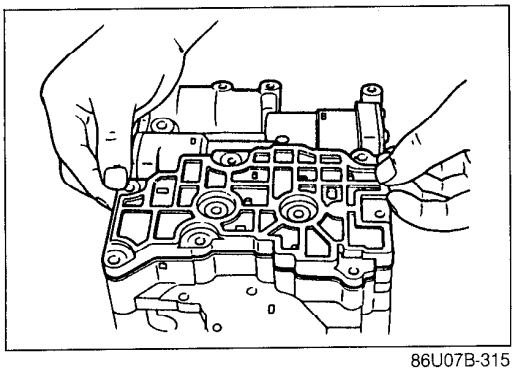
86U07B-315

13. Install the front control body on the premain control body.

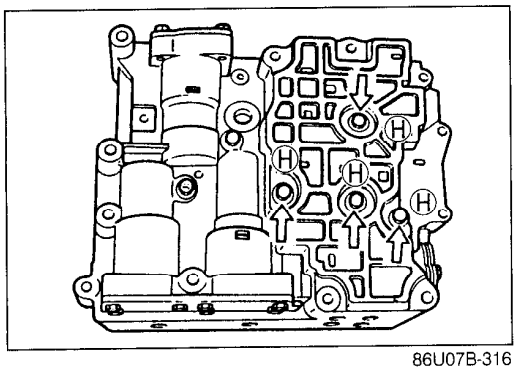

86U07B-316

Note
- **Match the bolt head letter as shown.**

14. Loosely tighten the bolts.

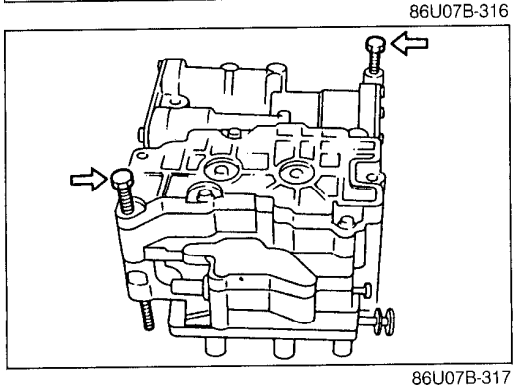
86U07B-317

15. Install the control valve body mounting bolts as shown for alignment.

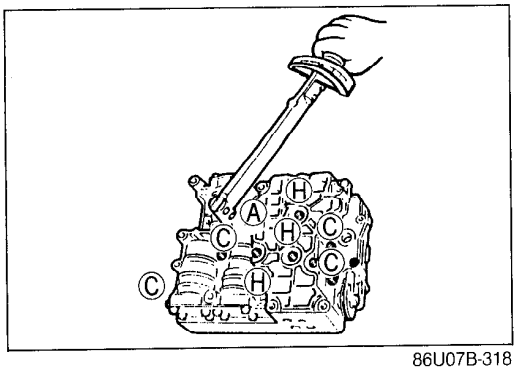

86U07B-318

16. Tighten the mounting bolts.
    (1) Tighten the front control body.

Tightening torque:
6—8 N·m (66—80 cm-kg, 57—69 in-lb)

Downloaded from www.Manualslib.com manuals search engine

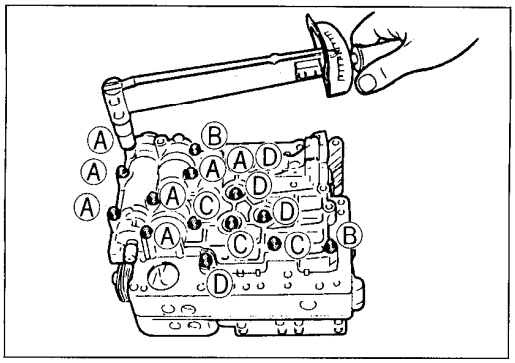

86U07B-319

(2) Tighten the rear control body.

Tightening torque:
6—8 N·m (66—80 cm-kg, 57—69 in-lb)

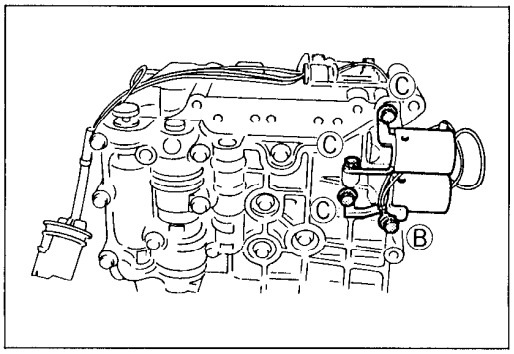

86U07B-320

17. Install the 3-4 solenoid valve and lock-up solenoid valve along with new O-rings and oil strainers.

Tightening torque:
6—8 N·m (66—80 cm-kg, 57—69 in-lb)

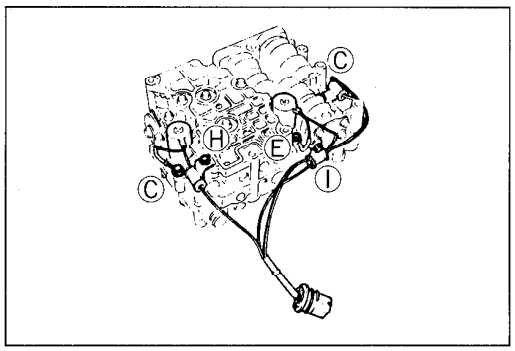

86U07B-321

18. Install the 1-2 solenoid valve and 2-3 solenoid valve along with new O-rings and oil strainers.

Tightening torque:
6—8 N·m (66—80 cm-kg, 57—69 in-lb)

Downloaded from www.Manualslib.com manuals search engine

CONTROL VALVE BODY (ON-VEHICLE REMOVAL / INSTALLATION)

On-vehicle Removal

Caution

- **Clean the transaxle exterior thoroughly with a steam cleaner or cleaning solvents before removal.**

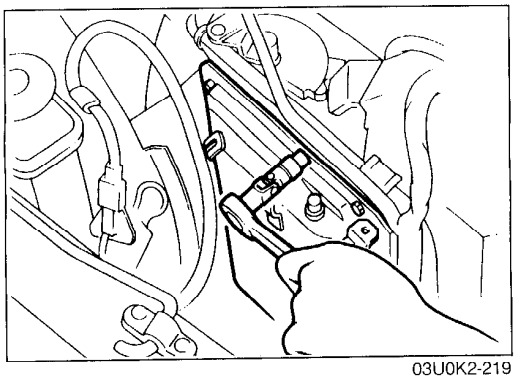

03U0K2-219

1. Disconnect the oil hose.
2. Drain the ATF into a suitable container.

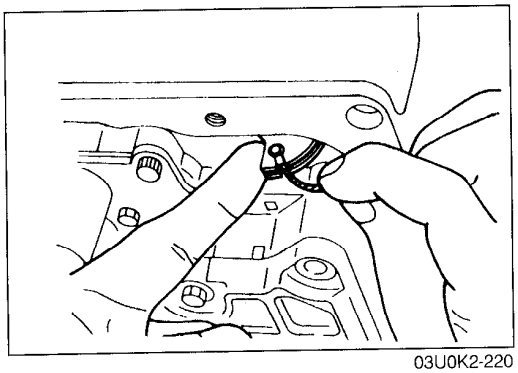

03U0K2-220

3. Remove the control valve cover and the gasket.
4. Remove the throttle cable from the throttle cam of the valve body.

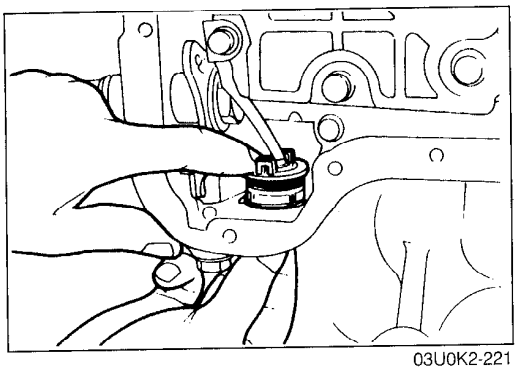

03U0K2-221

5. Disconnect the solenoid connector.
6. Pinch the tangs of the solenoid connector and remove it by pushing inward.

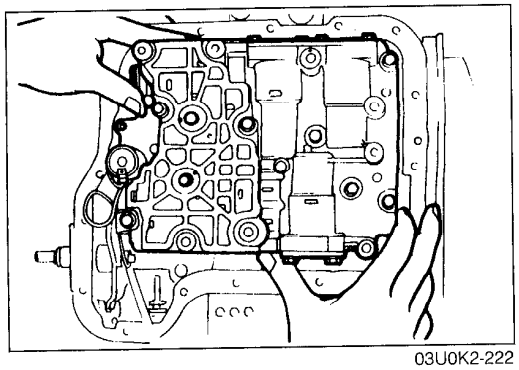

03U0K2-222

7. Remove the control valve body as an assembly.

On-vehicle Installation

Caution

- **Be sure to align the manual plate and the manual valve.**

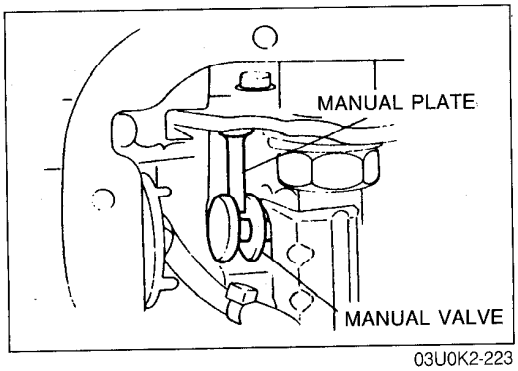

03U0K2-223

Downloaded from www.Manualslib.com manuals search engine

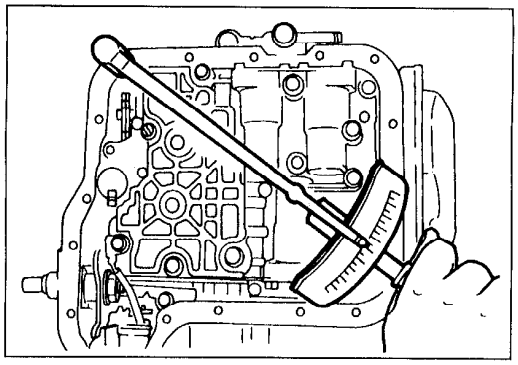

03U0K2-224

1. Install the control valve body assembly.

Tightening torque:
11—15 N·m (1.1—1.5 m-kg, 8.0—11 ft-lb)

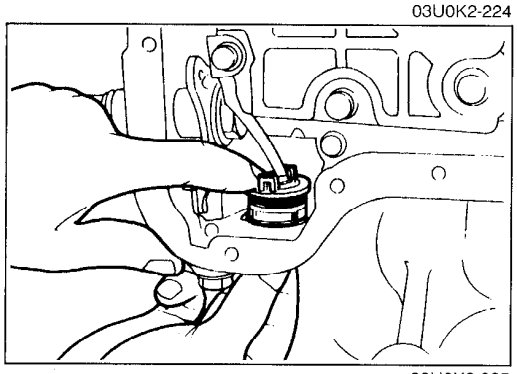

03U0K2-225

2. Apply ATF to a new O-ring and install it onto the solenoid connector.
3. Install the solenoid connector into the transaxle case.

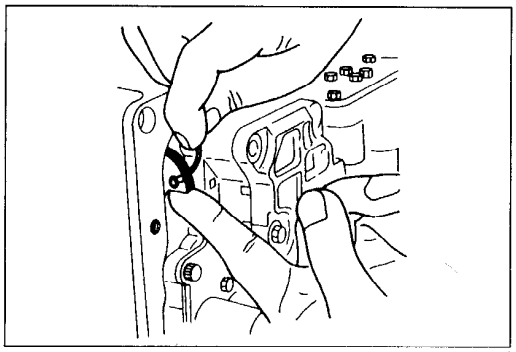

03U0K2-226

4. Install the throttle cable to the throttle cam.

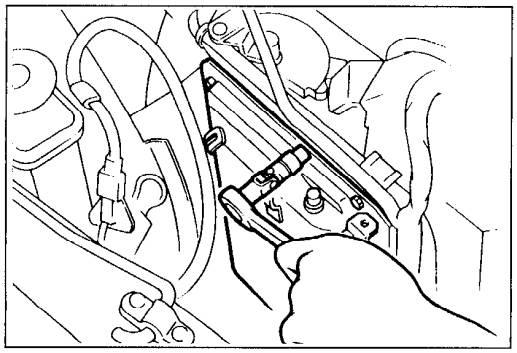

03U0K2-227

5. Install the control valve body cover along with a new gasket.

Tightening torque:

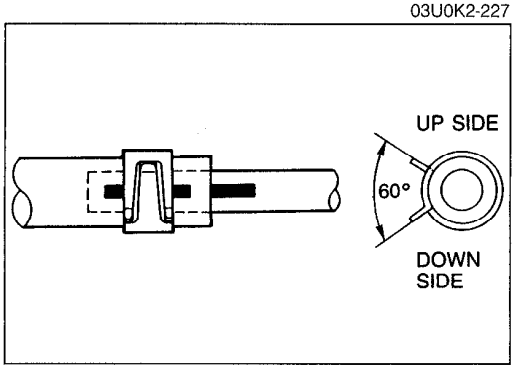

03U0K2-228

6. Align the marks, and slide the oil cooler hose onto the oil cooler pipe until it is fully seated against the ridge.
7. Install the hose clamp onto the hose at the center of the mark and at the angle shown.
8. Verify that the hose clamp does not interfere with any other parts.
9. Pour in ATF and with the engine idling, check the ATF level and check for leaks. (Refer to page K2–134.)
10. Drive the vehicle and check the shift points, shift schedule, and shift shock. (Refer to Road test; page K2–127.)

Downloaded from www.Manualslib.com manuals search engine

IDLER GEAR ASSEMBLY (TRANSFER)

1. Disassemble in the order shown in the figure, referring to **Disassembly Note**.
2. Inspect all parts and repair or replace as necessary.
3. Assemble in the reverse order of disassembly, referring to **Assembly Note**.

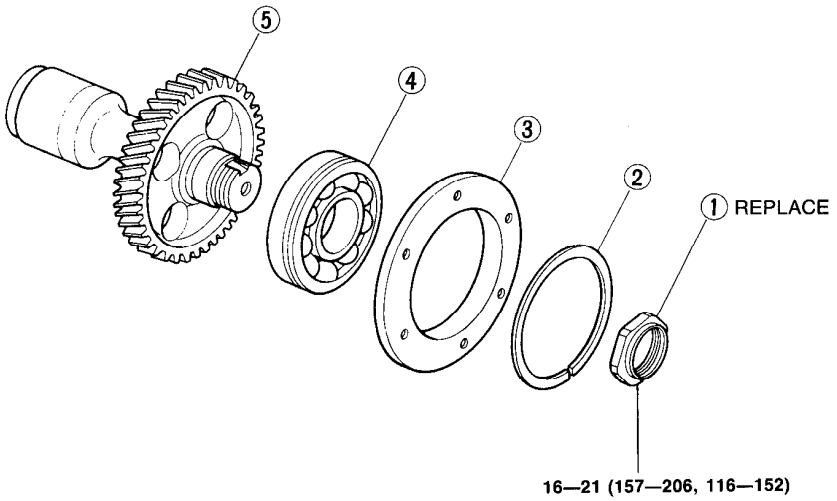

03U0K2-229

1. Locknut
   Disassembly Note ..... page K2–237
   Assembly Note ..... page K2–238
2. Retaining ring
3. Side cover
   Disassembly Note ..... page K2–238
   Assembly Note ..... page K2–238
4. Bearing
   Disassembly Note ..... page K2–238
   Assembly Note ..... page K2–238
5. Idle gear
   Inspect individual gear teeth for wear and cracks

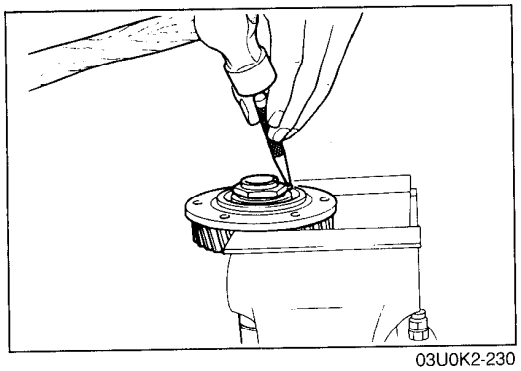

03U0K2-230

Disassembly Note

Locknut

1. Raise the nut tab and loosen the locknut, but do not remove it.

Downloaded from www.Manualslib.com manuals search engine

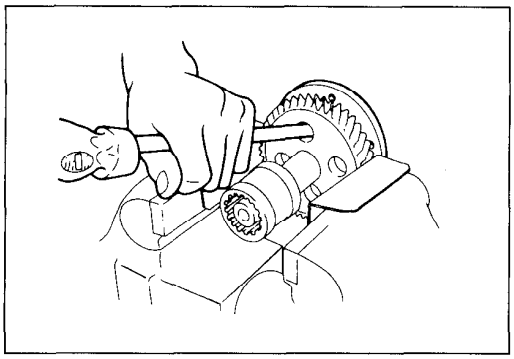

03U0K2-231

Side cover, bearing

1. Tap the bearing and remove the side cover and the bearing.

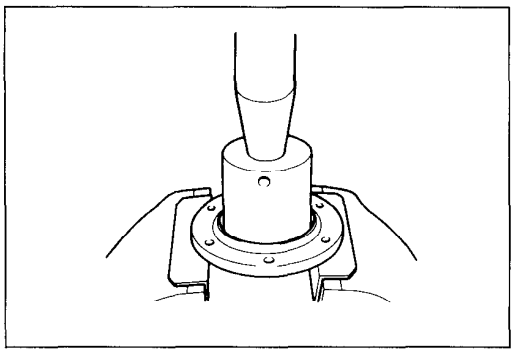

03U0K2-232

2. Remove the bearing from the side cover with a press.

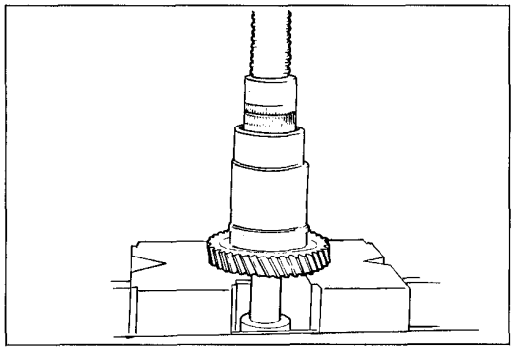

03U0K2-233

Assembly Note

Bearing

1. Install the bearing with a press.

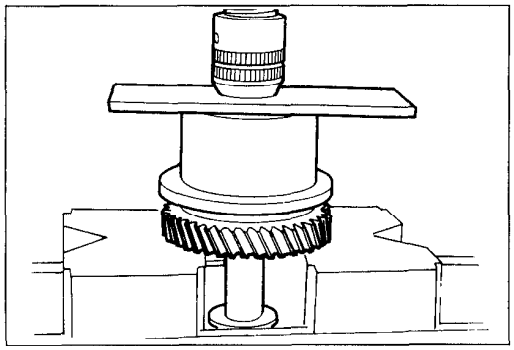

03U0K2-234

Side cover

1. Install the top cover with a press.

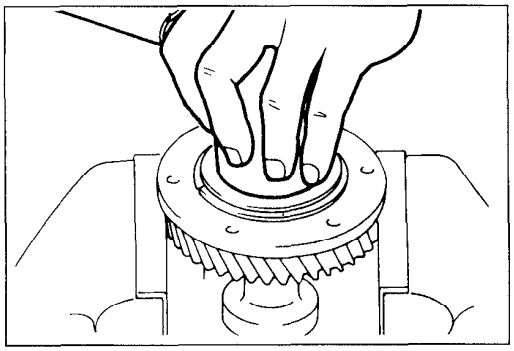

03U0K2-235

Locknut

1. Tighten a new locknut and crimp it.

Tightening torque:
157—206 N·m (16—21 m-kg, 116—152 ft-lb)

Downloaded from www.Manualslib.com manuals search engine

MEMO

Downloaded from www.Manualslib.com manuals search engine

FRONT AND CENTER DIFFERENTIAL ASSEMBLY
PREPARATION
SST

49 B027 001 Holder, diff. side gear	For holding side gear	49 B027 004 Measuring plate	For measure of clialance
49 F401 331 Body	For installation of bearing	49 G030 338 Attachment E	For installation of bearing

03U0K2-236

Disassembly / Inspection / Assembly

1. Disassemble in the order shown in the figure, referring to **Disassembly Note**.
2. Inspect all parts and repair or replace as necessary:
3. Assemble in the reverse order of disassembly, referring to **Assembly procedure**.

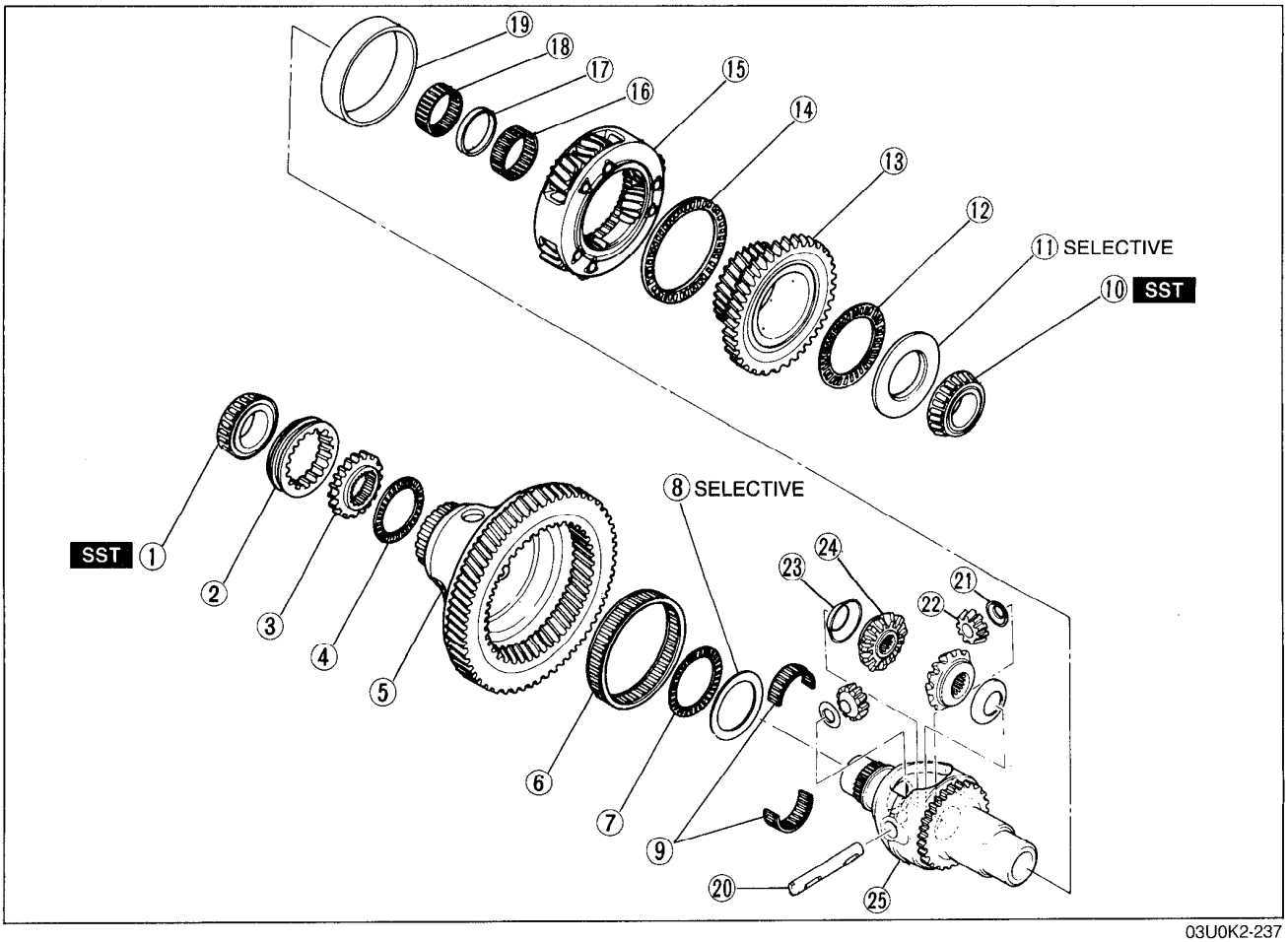

03U0K2-237

Downloaded from www.Manualslib.com manuals search engine

1. Bearing inner race (Gear sleeve side)
   Disassembly Note ..... page K2–241
   Inspect for damage or rough rotation
2. Differential lock gear sleeve
3. Differential lock hub
   Inspect for wear or damage
4. Gear case needle bearing
   Inspect for wear or damage
5. Ring gear case
   Inspect for wear or damage
6. Gear case needle bearing
   Inspect for wear or damage
7. Gear case needle bearing
   Inspect for wear or damage
8. Differential lock thrust washer
9. Gear case needle bearings
   Inspect for wear or damage
10. Bearing inner race (Sun gear side)
    Disassembly Note ..... page K2–241
    Inspect for wear or damage
11. Thrust washer
12. Gear case needle bearing
    Inspect for wear or damage
13. Sun gear
    Inspect for wear or damage
14. Gear case needle bearing
    Inspect for wear or damage
15. Planetary carrier
    Inspect for engagement with pinion gears
16. Gear case needle bearing
    Inspect for wear or damage
17. Spacer
18. Gear case needle bearing
    Inspect for wear or damage
19. Differential gear case sleeve
    Disassembly Note ..... page K2–242
20. Pinion shaft
21. Washer
22. Pinion gear
    Inspect for wear or damage
23. Washer
24. Side gear
    Inspect for wear or damage
25. Differential gear case
    Inspect for wear or damage

03U0K2-238

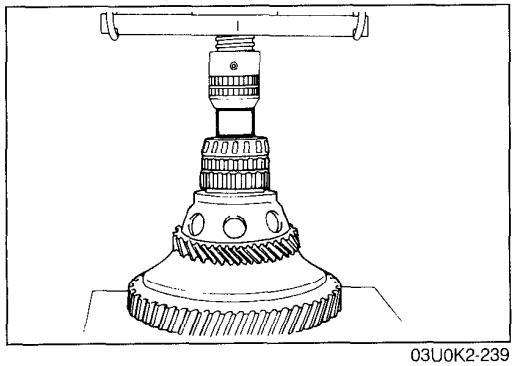

03U0K2-239

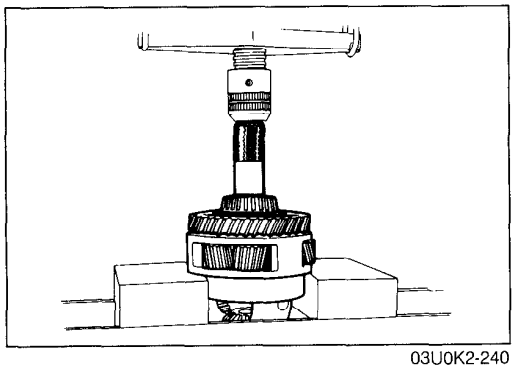

03U0K2-240

Disassembly note
Bearing inner race (Gear sleeve side)

Caution
- **Hold the front differential with one hand so that it does not fall.**

1. Remove the bearing with a press.

Bearing inner race (Sun gear side)

Caution
- **Hold the front differential gear case with one hand so that it does not fall.**

1. Remove the bearing with a suitable pipe.

Downloaded from www.Manualslib.com manuals search engine

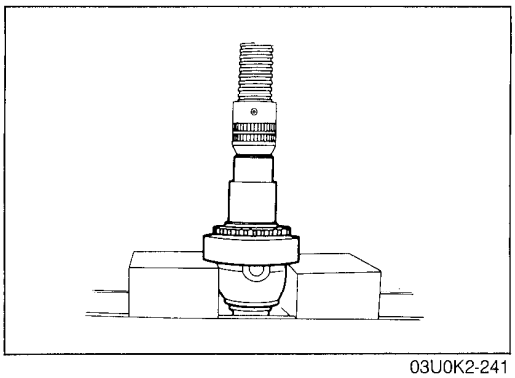

03U0K2-241

Differential gear case sleeve

Caution
- **Hold the gear case one hand so that it dose not fall.**

1. Remove the differential gear case sleeve with a press.

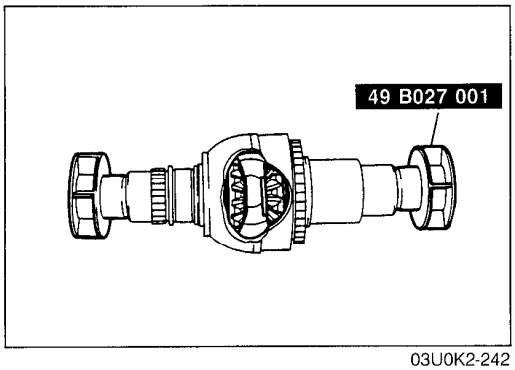

03U0K2-242

Assembly procedure
Front differential

1. Install the side gears and washers, and fix them with the **SST**.

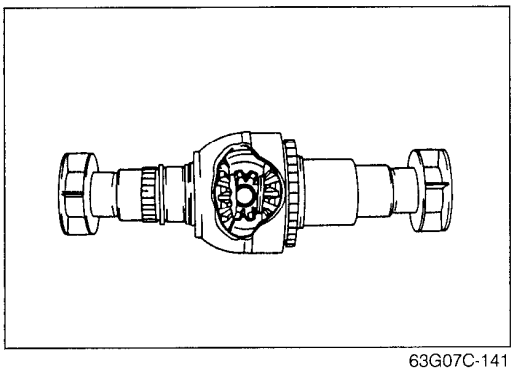

63G07C-141

2. Install a pinion gear and turn it 180°.

Note
- **Do not install the washer at this time.**

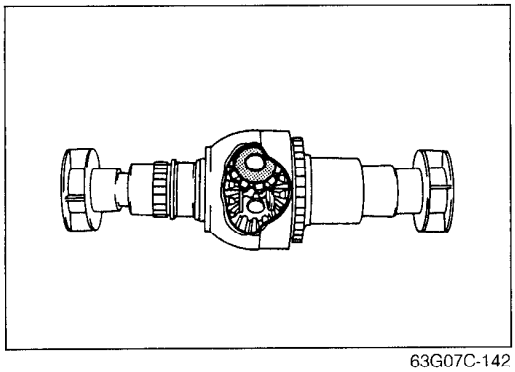

63G07C-142

3. Install the other pinion gear and washer.
4. Turn the pinion gear and washer 150°.
5. Install the washer on opposite pinion gear.

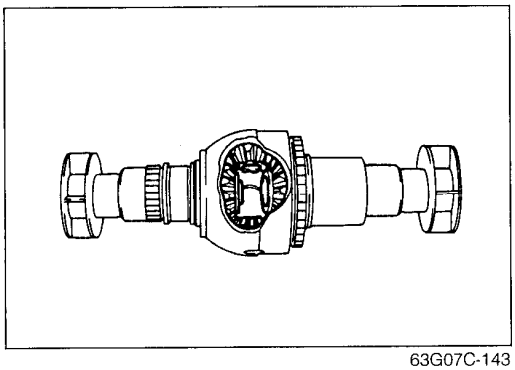

63G07C-143

6. Align the pinion shaft holes of the pinion gears with the differential gear case.

Downloaded from www.Manualslib.com manuals search engine

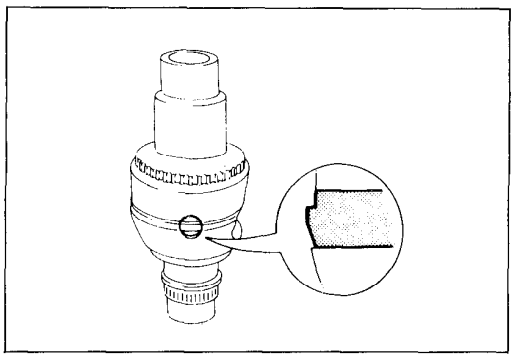

63G07C-144

7. Insert the pinion shaft.

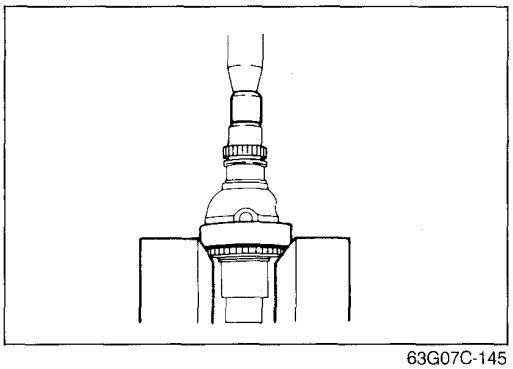

63G07C-145

Center differential

1. Install the differential gear case sleeve.

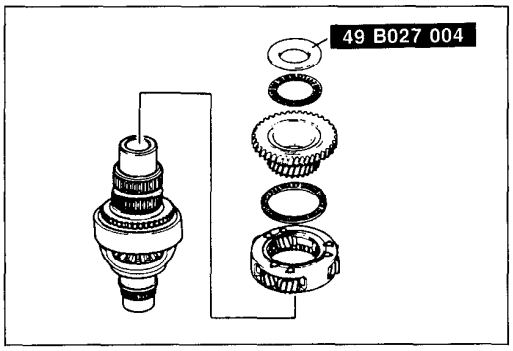

03U0K2-243

2. Install the gear case needle bearings and spacer.
3. Install the planetary carrier assembly, gear case needle bearing, sun gear, gear case needle bearing, and the **SST**.

Measuring plate thickness: 4.3mm (0.169 in)

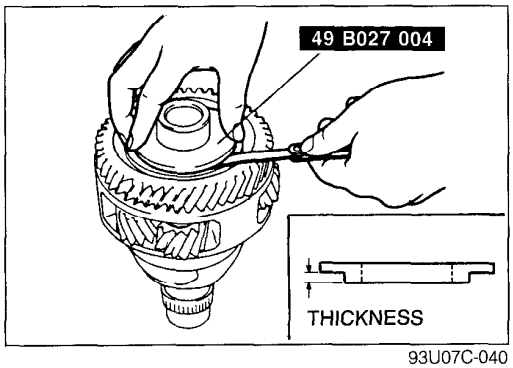

93U07C-040

4. Measure the clearance between the **SST** and gear case needle bearing.
   If the clearance is not within specification, select the proper washer from the chart below.

Standard: 0.10—0.30mm (0.004—0.012 in)

Measured clearance mm (in)	Washer thickness mm (in)
0.10—0.25 (0.0039—0.0098)	4.3 (0.169)
0.30—0.45 (0.0118—0.0177)	4.1 (0.161)
0.50—0.65 (0.0196—0.0256)	3.9 (0.154)
0.70—0.85 (0.0276—0.0334)	3.7 (0.146)
0.90—1.10 (0.0354—0.0433)	3.5 (0.138)

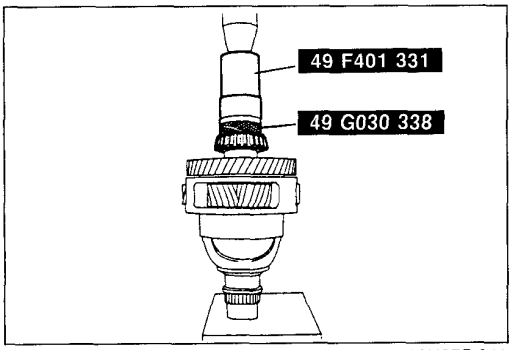

93U07C-041

5. Install the proper washer and the bearing inner race with the **SST** .

Downloaded from www.Manualslib.com manuals search engine

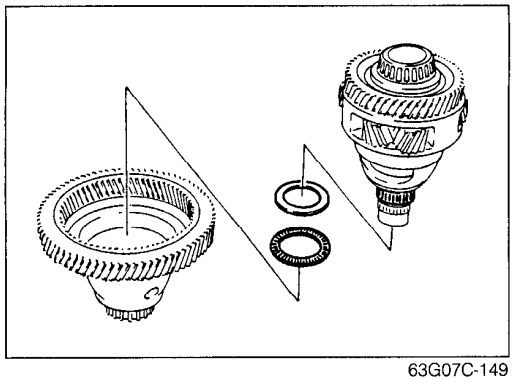

63G07C-149

6. Install the gear case needle bearings and differential lock thrust washer.

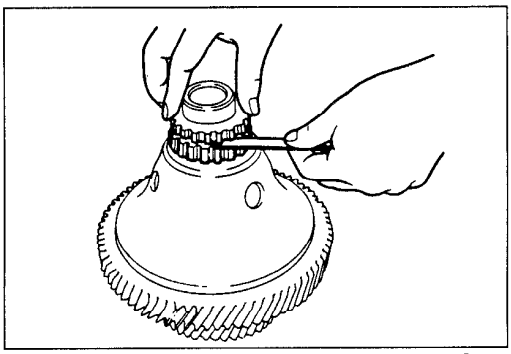

93U07C-042

7. Install the differential lock gear sleeve, differential lock hub and gear case needle bearing.
8. Measure the clearance between the differential lock hub and the gear case needle bearing.
   If the clearance is not within specification, select the proper differential lock thrust washer.

   Standard: 0.15—0.30mm (0.006—0.011 in)
   Available washer thickness:
   1.20mm (0.047 in), 1.35mm (0.053 in), 1.50mm (0.059 in), 1.65mm (0.065 in), 1.80mm (0.071 in)

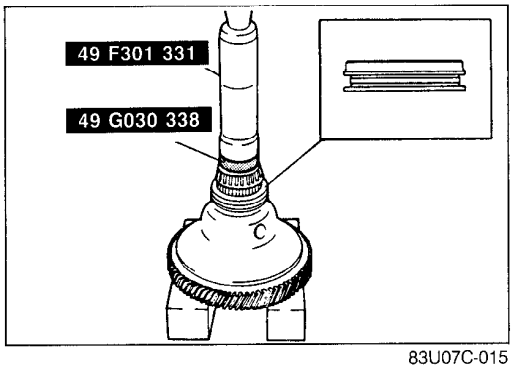

83U07C-015

9. Install the bearing inner race with a press and the **SST**.

Downloaded from www.Manualslib.com manuals search engine

TRANSFER CARRIER ASSEMBLY PREPARATION SST

49 0107 680A Engine stand	For disassembly and assembly of differential	49 M005 561 Hanger, differential carrier	For disassembly and assembly of differential
49 0636 145 Puller, fan pulley boss	For removal of bearing inner race (side bearing)	49 U027 003 Installer, oil seal	For installation of oil seal (companion flange)
49 F027 0A0 Gauge set, pinion height adjustment	For adjustment of pinion height	49 0727 570 Gauge body, pinion height (Part of 49 F027 0A0)	For adjustment of pinion height
49 8531 565 Pinion model	For adjustment of pinion height	49 8531 567 Collar A (Part of 49 8531 565)	For adjustment of pinion height
49 D017 2A1 Installer set, bearing	For installation of bearing	49 F401 336B Attachment B (Part of 49 D017 2A1)	For installation of bearing inner race (rear bearing)
49 F401 331 Body (Part of 49 D017 2A1)	For installation of bearing inner race (rear bearing)	49 0839 425C Puller set, bearing	For removal and installation of companion flange
49 S120 710 Holder, coupling flange	For removal and installtion of companion flange	49 0259 720 Wrench, differential side bearing adjusting nut	For adjustment of drive pinion and ring gear backlash
49 F401 366A Plate	For removal of bearing inner race	49 B027 003 Attachment M	For removal of bearing inner race

Downloaded from www.Manualslib.com manuals search engine

49 8531 555 Gauge block	For adjustment of pinion height	49 8531 568 Collar B	For adjustment of pinion height

03U0K2-244

Disassembly / Inspection / Assembly

1. Disassemble in the order shown in the figure, referring to **Disassembly Note**.
2. Inspect all parts and repair or replace as necessary.
3. Assemble in the reverse order of disassembly, referring to **Assembly Note**.

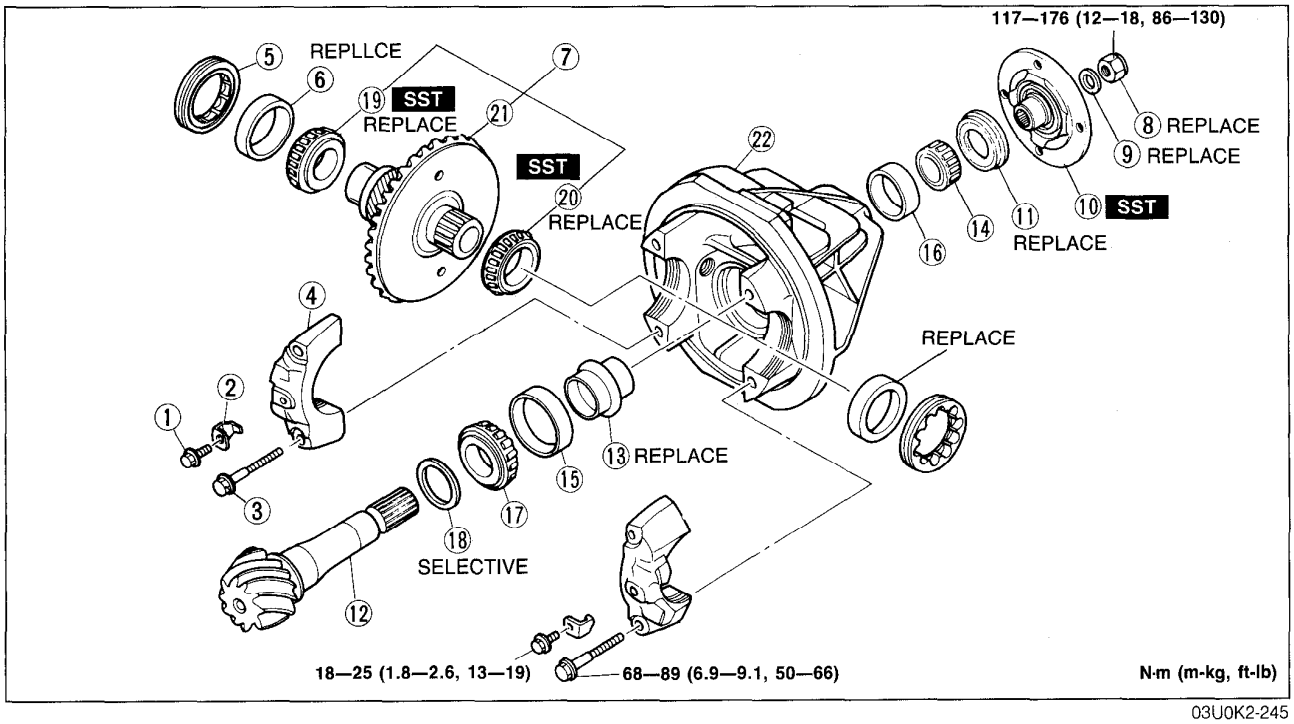

03U0K2-245

1. Bolts
2. Lock plates
3. Bolts
4. Bearing caps
   Disassembly Note ..... page K2–246
5. Adjusting nuts
   Disassembly Note ..... page K2–246
6. Bearing outer races (Side bearing)
7. Differential gear assembly
8. Locknut
   Disassembly Note ..... page K2–246
9. Washer
10. Companion flange
    Disassembly Note ..... page K2–246
11. Oil seal
12. Drive pinion
    Disassembly Note ..... page K2–246
    Inspect splines for wear and damage
    Assembly Note..... page K2–247
13. Collapsible spacer
14. Bearing inner race
    Inspect for damage and rough rotation
    Assembly Note..... page K2–247
15. Bearing outer race
    Disassembly Note ..... page K2–246
    Assembly Note..... page K2–247
16. Bearing outer race
    Disassembly Note ..... page K2–246
    Assembly Note..... page K2–247
17. Bearing outer race
    Disassembly Note ..... page K2–247
    Assembly Note..... page K2–247
18. Spacer
    Assembly Note..... page K2–247
19. Bearing inner race
    Disassembly Note ..... page K2–247
20. Bearing inner race
    Disassembly Note ..... page K2–247
21. Differential gear
    Inspect individual gear teeth for wear and cracks
22. Transfer carrier

Downloaded from www.Manualslib.com manuals search engine

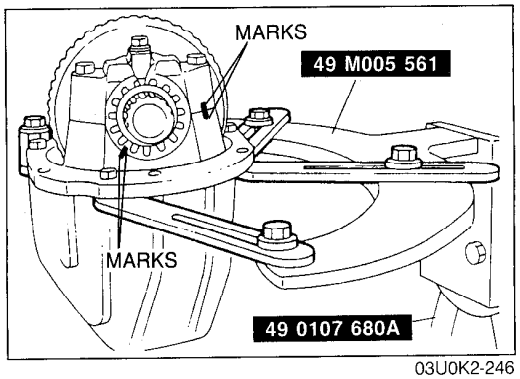

03U0K2-246

Disassebly Note

Transfer carrier assembly

1. Mount the transfer carrier assembly on the **SST**.

Bearing caps

1. Mark one bearing cap and the carrier.

Adjusting nuts

1. Mark one adjusting nuts and the carrier.

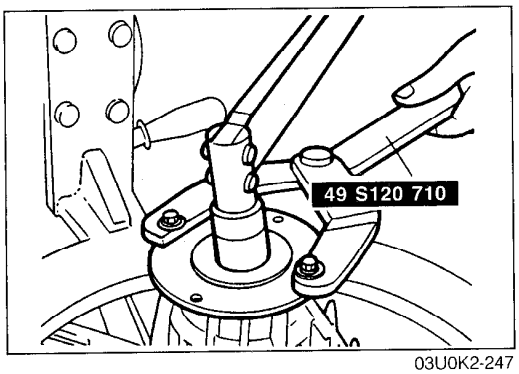

03U0K2-247

Locknut

1. Hold the companion flange with the **SST** and remove the locknut.

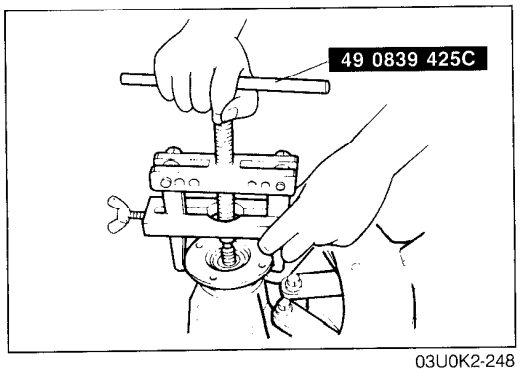

03U0K2-248

Companion flange

1. Remove the companion flange with the **SST**.

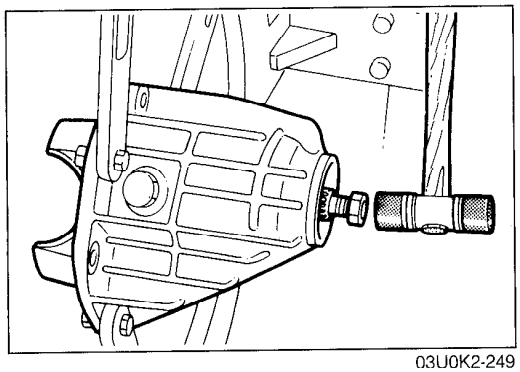
03U0K2-249

Drive pinion

1. Push the drive pinion out by attaching a miscellaneous lock-nut to it, then tapping it with a brass hammer.

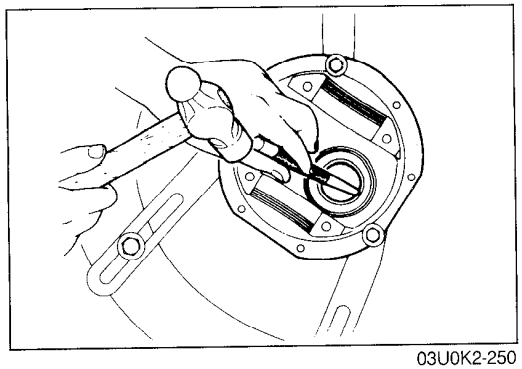
03U0K2-250

Bearing outer race

Note

- **For proper reassembly, identify the bearing outer race.**

1. Remove the bearing outer races by using the two grooves in the carrier and tapping the races alternately.

Downloaded from www.Manualslib.com manuals search engine

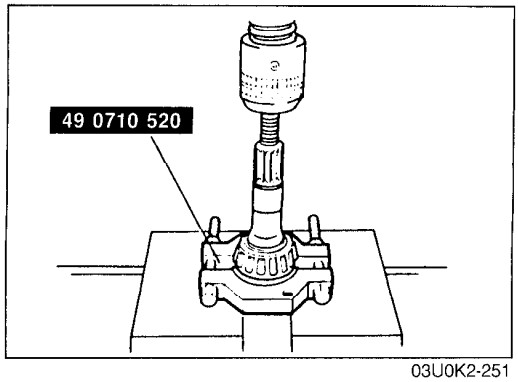

03U0K2-251

Bearing inner race (Rear bearing)

Note
- **Support the drive pinion by hand so that it will not fall.**

1. Remove the bearing inner race (rear bearing) with the **SST**.

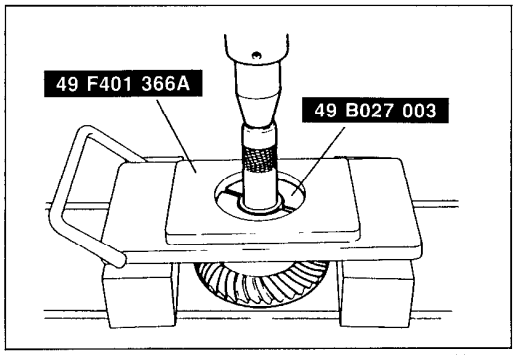

03U0K2-252

Bearing inner race (Differential gear)

Note
- **Do not disassemble the bearing inner race unless necessary.**
- **For proper reassembly, identify the bearing inner race.**
- **Support the drive pinion by hand so that it will not fall.**

1. Remove the bearing inner race with the **SST**.

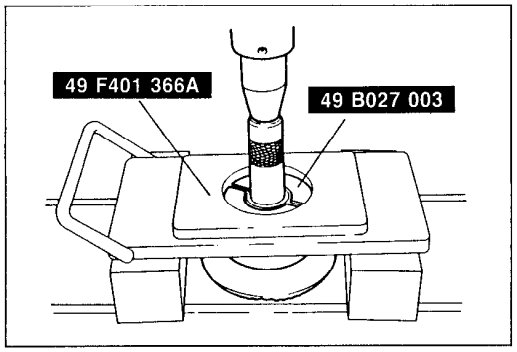

Assembly note
Adjustment of pinion height

1. Install the bearing inner race with the **SST**.

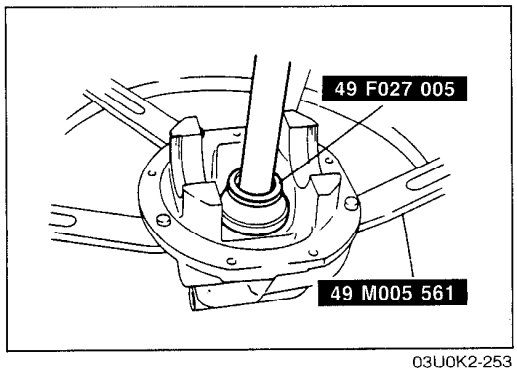

03U0K2-253

2. Install the bearing outer race with a brass drift.

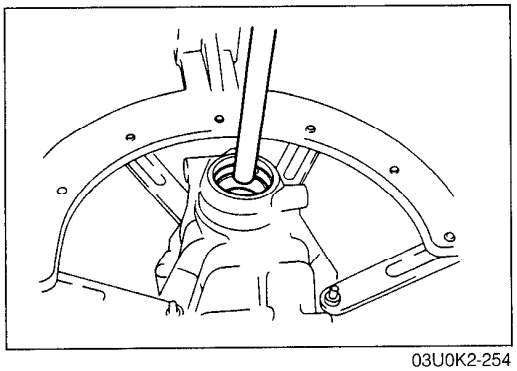

03U0K2-254

Downloaded from www.Manualslib.com manuals search engine

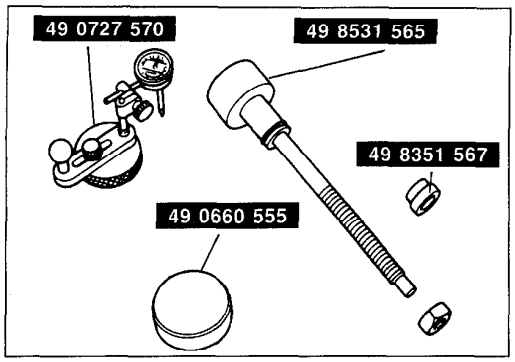

9MU0MX-052

3. Adjust the drive pinion height as follows with the **SST**.

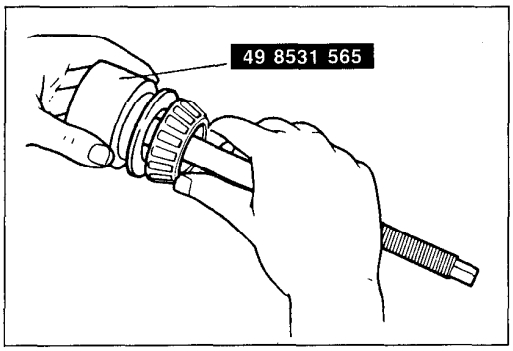

9MU0MX-053

Note
- **Use the spacer that was removed.**

a) Install the spacer and bearing inner race to the **SST**.

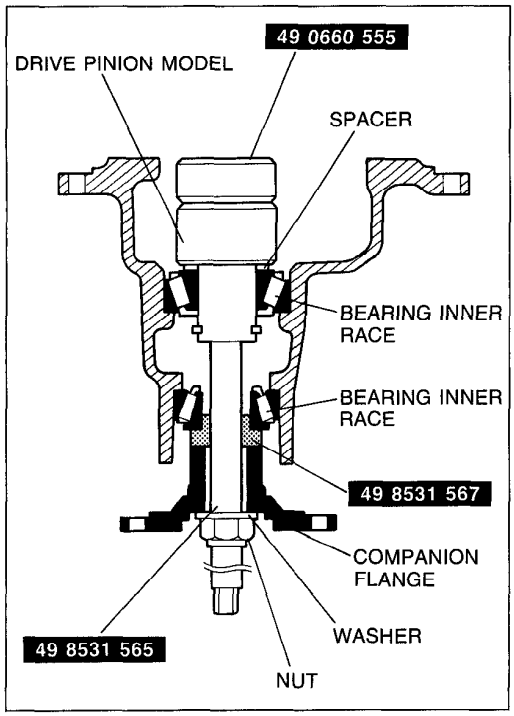

9MU0MX-054

b) Assemble the spacer, rear bearing, and **SST**. Secure the **SST** with the O-ring. Install the assembly in the carrier.

Note
- **Use the same spacer and nut removed during disassembly.**

c) Install the front bearing, **SST**, companion flange, washer, and nut.
d) Tighten the nut to the extent that the companion flange can still be turned by hand.

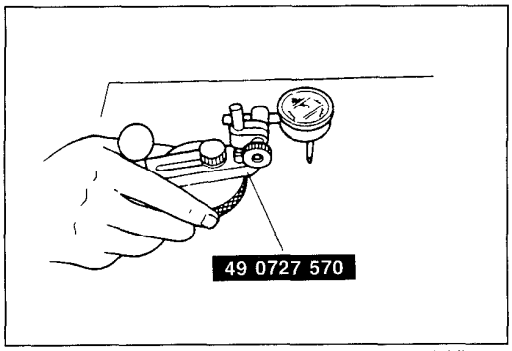

9MU0MX-055

e) Place the **SST** on the surface plate and set the dial indicator to "Zero".

Downloaded from www.Manualslib.com manuals search engine

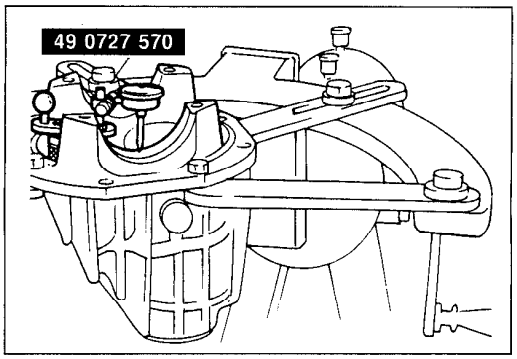

9MU0MX-056

f) Place the **SST** atop the drive pinion model; then set the gauge body atop the gauge block.
g) Place the feeler of the dial indicator so that it contacts where the side bearing is installed in the carrier. Measure the lowest position on both the left and right sides.

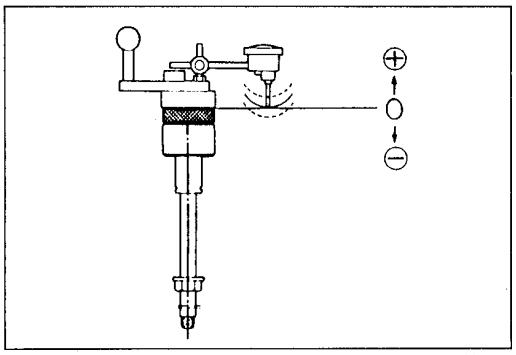

9MU0MX-057

h) Add the two (left and right) values obtained by the measurements taken in step g, and divide the total by 2.

Standard: 0mm (0 in)

Mark	Thickness	Mark	Thickness
08	3.08mm (0.1213 in)	29	3.29mm (0.1295 in)
11	3.11mm (0.1224 in)	32	3.32mm (0.1307 in)
14	3.14mm (0.1236 in)	35	3.35mm (0.1319 in)
17	3.17mm (0.1248 in)	38	3.38mm (0.1331 in)
20	3.20mm (0.1260 in)	41	3.41mm (0.1343 in)
23	3.23mm (0.1271 in)	44	3.44mm (0.1354 in)
26	3.26mm (0.1283 in)	47	3.47mm (0.1366 in)

9MU0MX-058

Note
- **The spacer thicknesses are available in increments of 0.03mm. Select the spacer thickness that is closest to that necessary.**

i) If it is not within specification, adjust the pinion height by selection of a spacer.

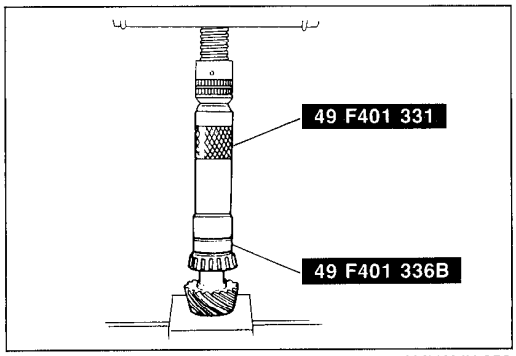

9MU0MX-059

Adjustment of drive pinion preload

Note
- **Press on until the force required suddenly increases.**
- **Install the spacer selected for the pinion height adjustment, being careful that the installation direction is correct.**

1. Install the spacer.
2. Press the rear bearing on with the **SST**.

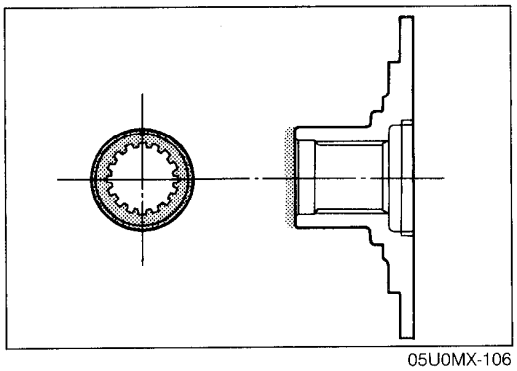

05U0MX-106

3. Apply a light coat of grease to the end face of the companion flange.

Downloaded from www.Manualslib.com manuals search engine

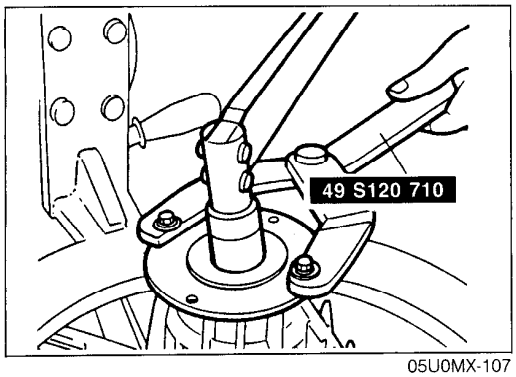

05U0MX-107

4. Install a new collapsible spacer.
5. Install the drive pinion assembly.

Note
- **Do not install the oil seal.**

6. Install the companion flange, and tighten the locknut with the **SST**.

Tightening torque: 118 N·m (12 m-kg, 87 ft-lb)

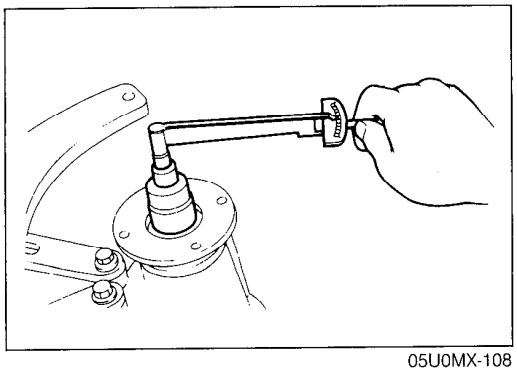
05U0MX-108

7. Turn the companion flange several turns by hand to seat the bearing.
8. Measure the drive pinion preload.
   Adjust the preload by tightening the locknut and record the tightening torque.

Preload:
0.3—0.7 N·m (3—7 cm-kg, 2.6—6.1 in-lb)

Tightening torque:
118—177 N·m (12—18 m-kg, 87—130 ft-lb)

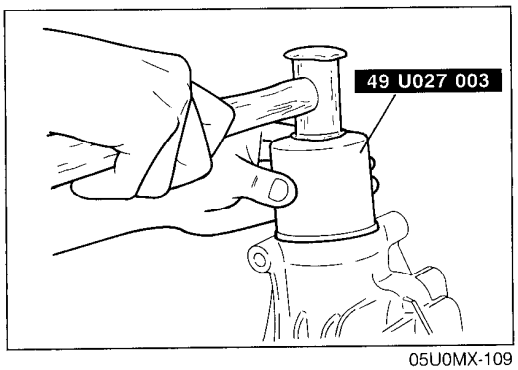

05U0MX-109

9. Remove the nut, washer, and companion flange.
10. Tap a new oil seal into the differential carrier with the **SST**.

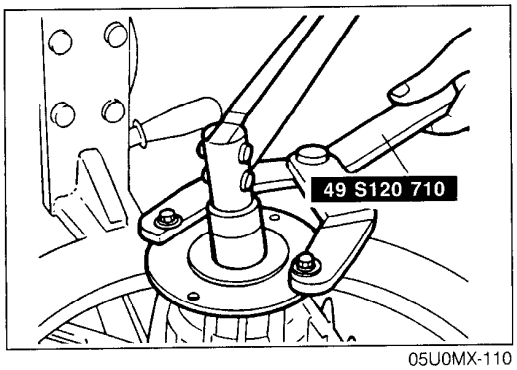

05U0MX-110

11. Install the companion flange and washer, and tighten the locknut to the tightening torque recoreded in Step 8.

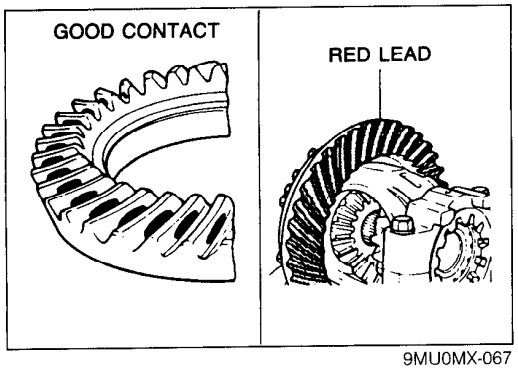

9MU0MX-067

Inspection and adjustment of teeth contact

1. Coat both surfaces of 6—8 teeth of the ring gear with a uniformly thin coat of red lead.
2. While moving the ring gear back and forth by hand, rotate the drive pinion several times and check the tooth contact.
3. If the tooth contact is good, wipe off the red lead.
4. If it is not good, adjust the pinion height, and then adjust the backlash.

Downloaded from www.Manualslib.com manuals search engine

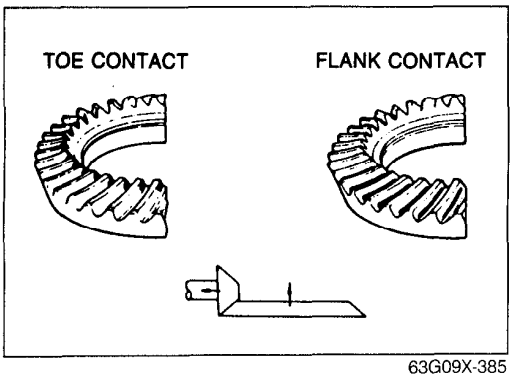

63G09X-385

(1) Toe and flank contact
Replace the spacer with a thinner one to move the drive pinion outward.

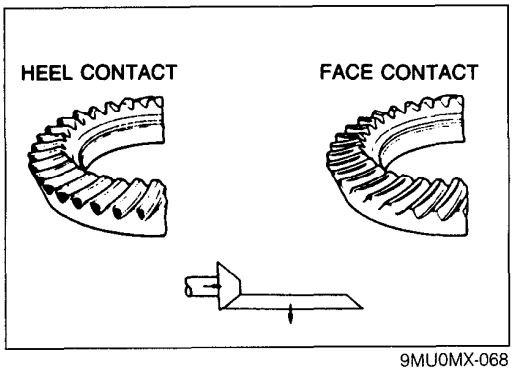

9MU0MX-068

(2) Heel and face contact
Replace the spacer with a thicker one to bring the drive pinion inward.

Downloaded from www.Manualslib.com manuals search engine

BEARING PRELOAD
Procedure

Note
- **Use the SST shown below to adjust the preload.**

1. Measure the output gear bearing preload, and select the proper adjustment shim(s) as described below.

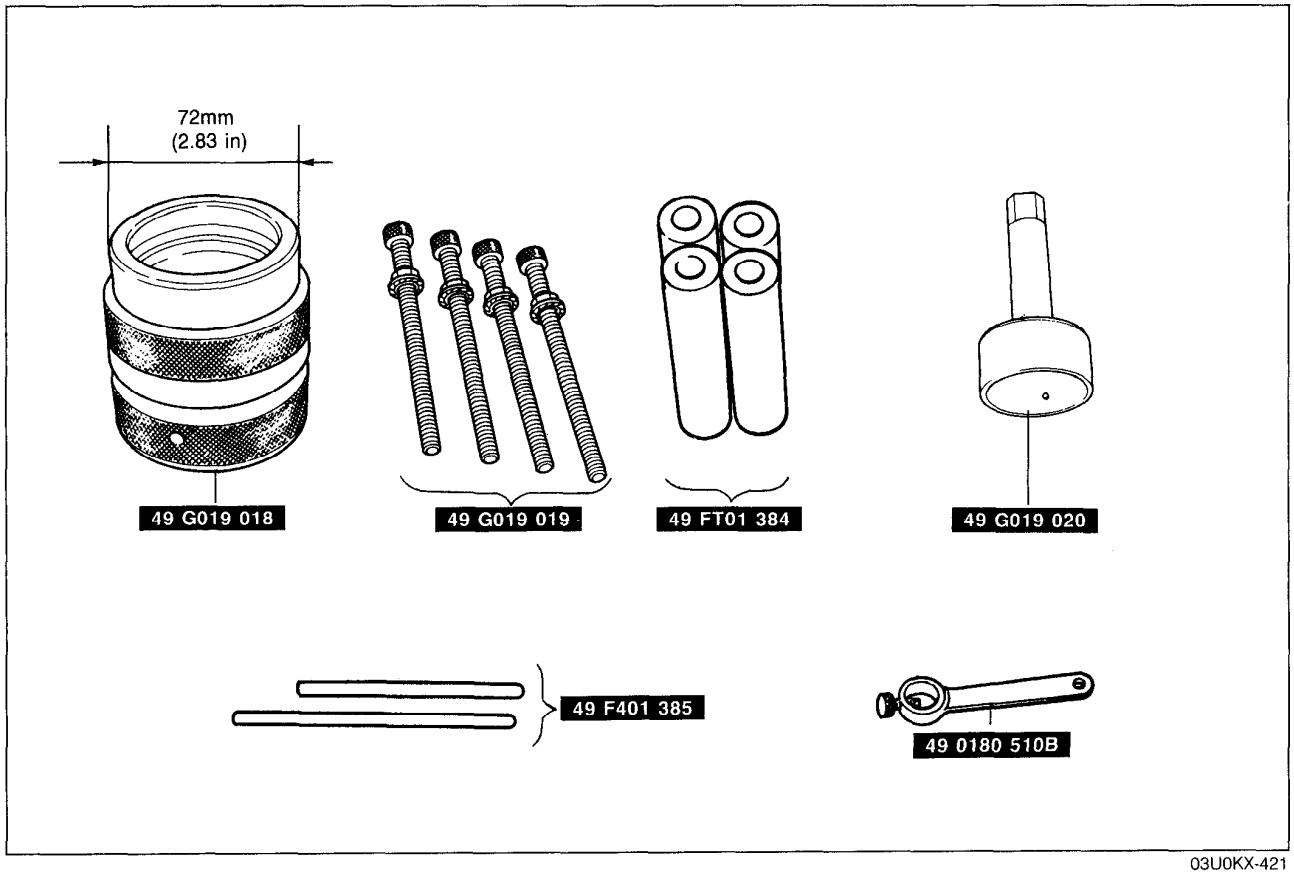

03U0KX-421

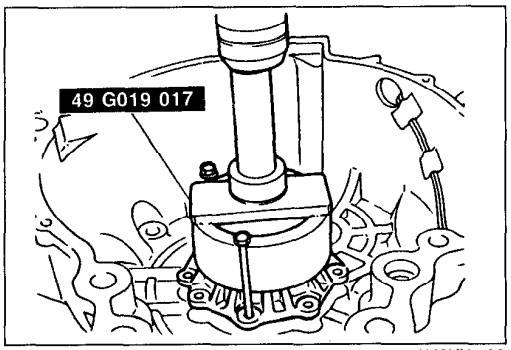

03U0KX-422

(1) Align the bearing cover with guide bolts as shown, and press it in. Tighten the bearing cover bolts.

Tightening torque:
11—14 N·m (1.1—1.4 m-kg, 8—10 ft-lb)

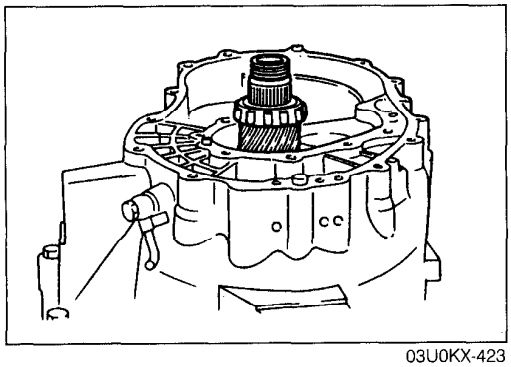

03U0KX-423

(2) Install the converter housing onto the transaxle hanger.
(3) Remove the bearing outer race and adjustment shims from the bearing housing.
(4) Set the output gear assembly into the converter housing.

Downloaded from www.Manualslib.com manuals search engine

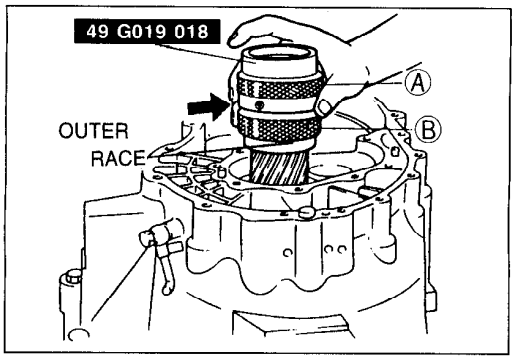

03U0KX-424

Caution
- **Eliminate the gap (arrow) by turning A or B of the selector.**

(5) Install the outer race removed in Step (3) to the **SST**. Set the **SST** and outer race onto the output gear assembly.

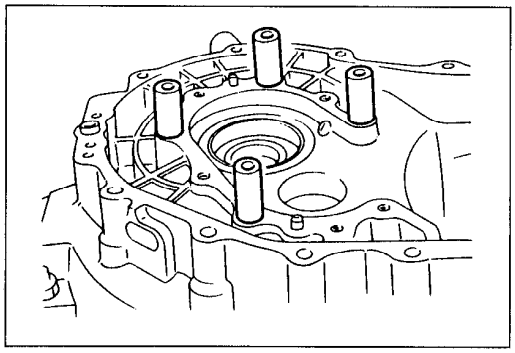
76G07B-723

(6) Set the four **SST** on the converter housing in the positions shown.

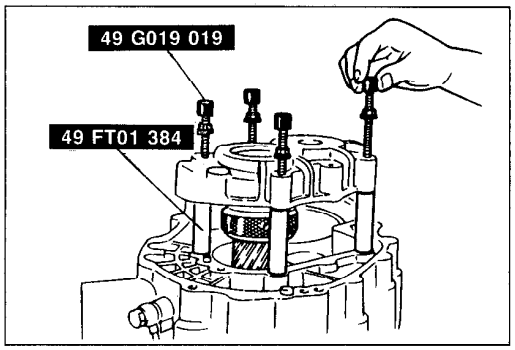

03U0KX-425

(7) Set the bearing housing on the **SST** (selector) and install the four **SST** (bolts); then tighten them to the specified torque.

Tightening torque:
19—26 N·m (1.9—2.6 m-kg, 14—18 ft-lb)

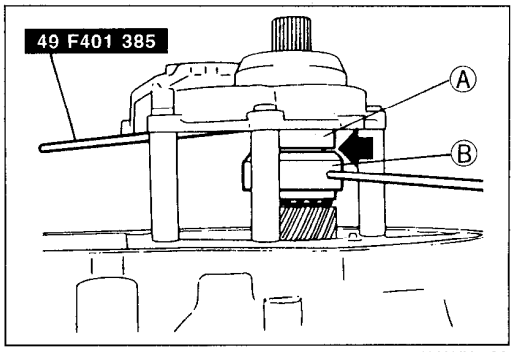

03U0KX-426

Note
- **Seat the bearing.**

(8) Turn the **SST** (selector) to increase the clearance indicated by the arrow with the **SST** (bars) until it no longer turns.
(9) Turn the selector in the opposite direction until the gap is reduced.

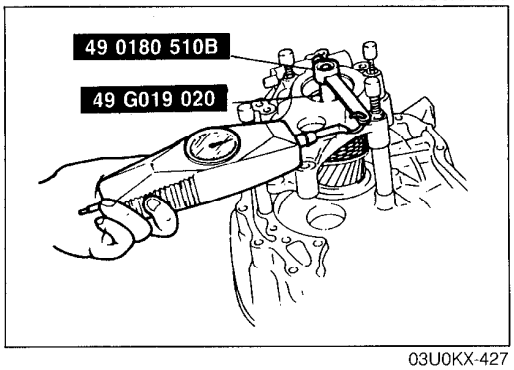

03U0KX-427

(10) Mount the **SST** and pull scale or torque wrench on the output gear.
(11) Adjust the clearance between A and B to obtain the specified preload/pull scale reading.

Preload:
0.03—0.9 N·m (0.3—9.0 cm-kg, 0.26—7.81 in-lb)
Reading on pull scale:
0.3—9 N (0.03—0.9 kg, 0.066—1.98 lb)

Downloaded from www.Manualslib.com manuals search engine

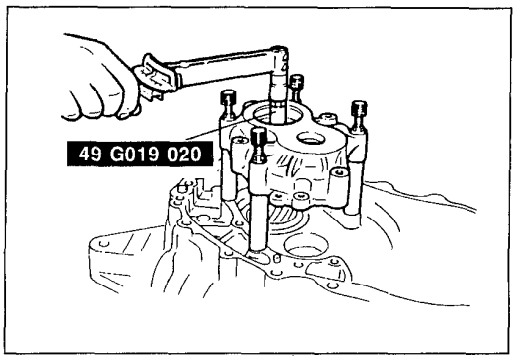

86U07B-361

Note
- **Read the preload when the output gear starts to turn.**

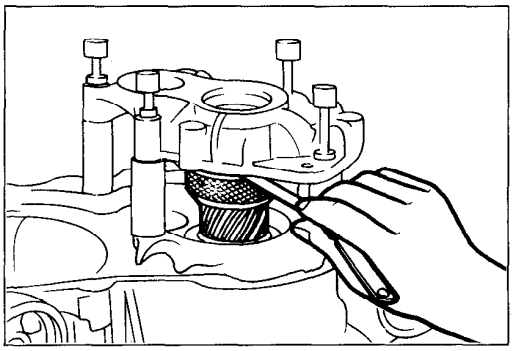

03U0KX-428

Caution
- **Measure the clearance around the entire circumference, and select shims equivalent to the maximum clearance.**
- **The maximum allowable number of shims is 7.**

(12) Measure the clearance. Select adjustment shim(s) equivalent to the measured clearance.

Thickness of shim mm (in)			
0.50 (0.020)	0.55 (0.022)	0.60 (0.024)	0.65 (0.026)
0.70 (0.028)	0.75 (0.030)	0.80 (0.032)	0.85 (0.034)
0.90 (0.035)	0.95 (0.037)	1.00 (0.039)	1.05 (0.041)
1.10 (0.043)	1.15 (0.045)	1.20 (0.047)	1.25 (0.049)
1.30 (0.051)	1.35 (0.053)	1.40 (0.055)	1.45 (0.057)

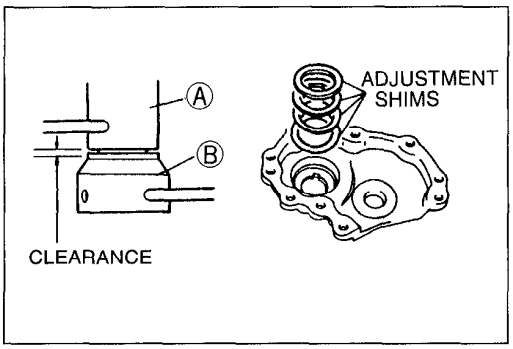

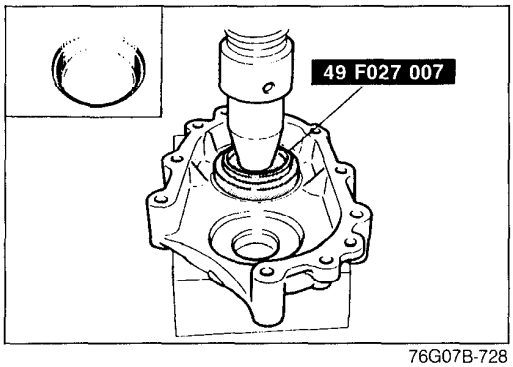

76G07B-728

(13) Remove the bearing housing and **SST**.
(14) Install the required shim(s) and press the bearing race into the bearing housing with the **SST**.

(15) Install the bearing housing.

Tightening torque:
19—26 N·m (1.9—2.6 m-kg, 14—19 ft-lb)

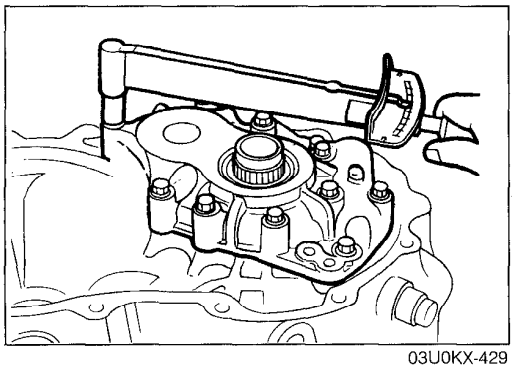

03U0KX-429

(16) Verify that the preload/pull scale reading is within specification. If not within specification return to Step (3).

Preload:
0.03—0.9 N·m (0.3—9.0 cm-kg, 0.26—7.81 in-lb)
Reading on pull scale:
0.3—9 N (0.03—0.9 kg, 0.066—1.98 lb)

(17) Remove the bearing housing and output gear assembly.

Downloaded from www.Manualslib.com manuals search engine

Note
- **Use the SST shown below to inspect and adjust the preload.**

2. Measure the differential side bearing preload, and select the proper adjustment shim(s) as described below.

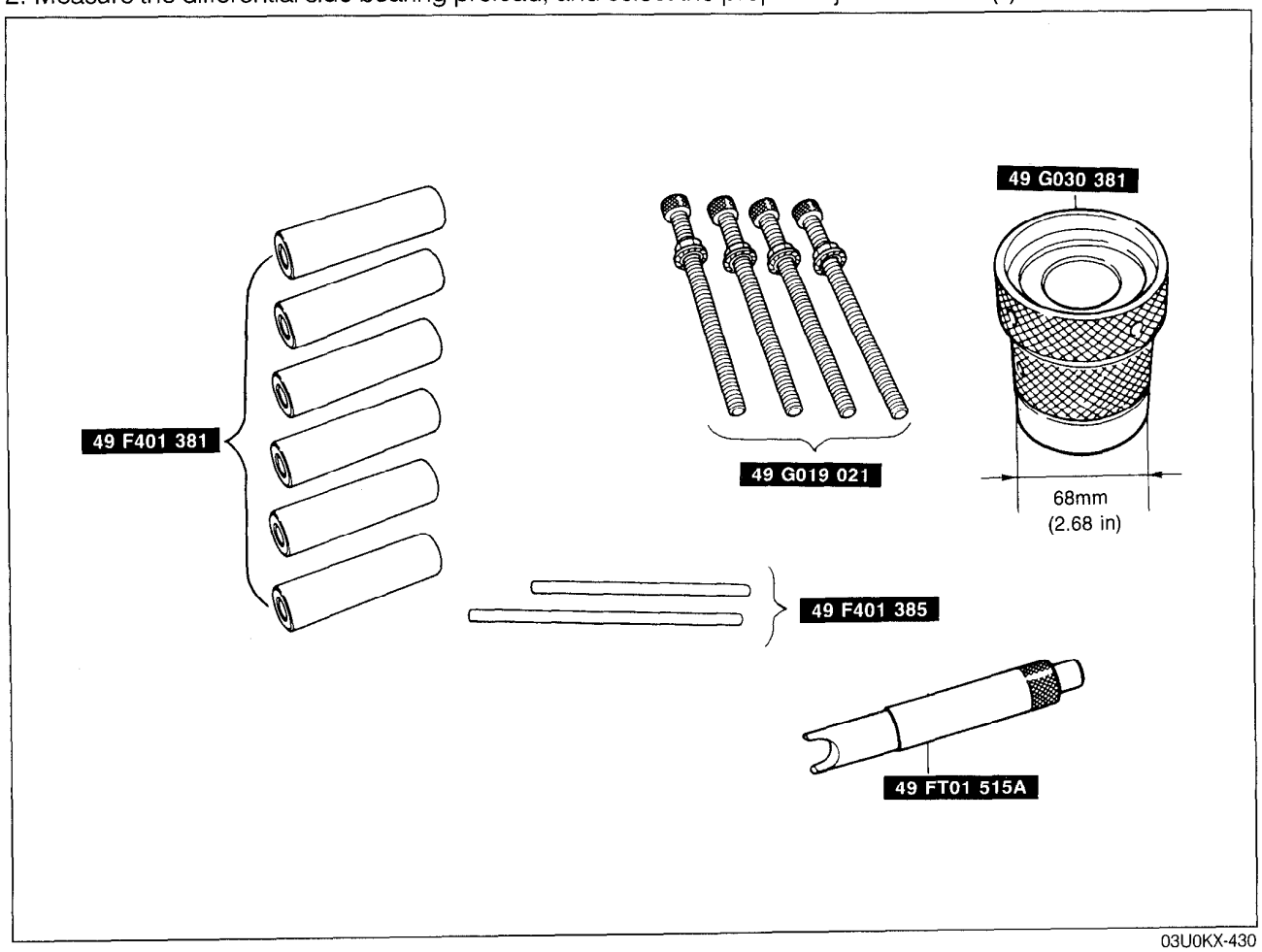

03U0KX-430

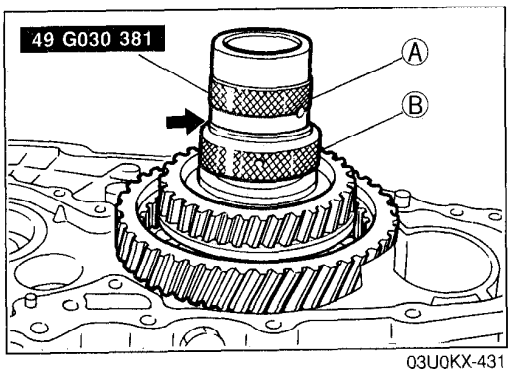

03U0KX-431

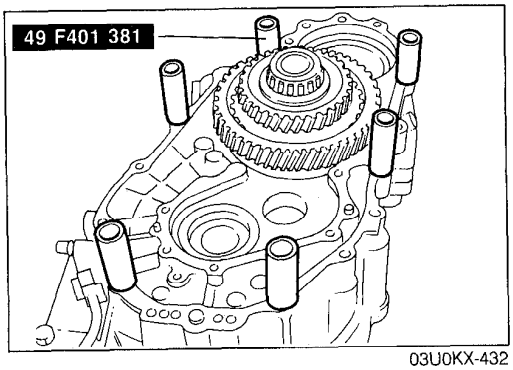

03U0KX-432

(1) Remove the bearing outer race and adjustment shims from the transaxle case.
(2) Set the differential assembly into the converter housing.

Caution
- **Eliminate the gap (arrow) by turning either A or B of the selector.**

(3) Install the outer race removed in Step (1) into the **SST**. Set the **SST** and outer race onto the differential assembly.

(4) Set the six **SST** on the converter housing in the positions shown.

Downloaded from www.Manualslib.com manuals search engine

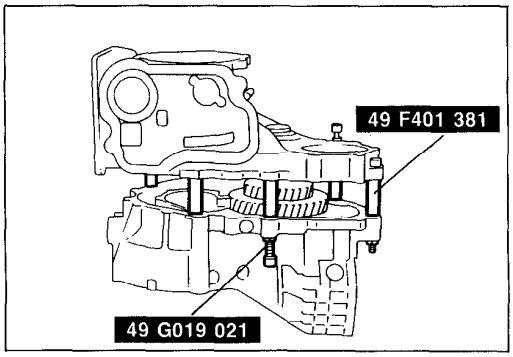

86U07B-370

(5) Set the transaxle case on the selectors.
(6) Tighten the **SST** (bolts) to the specified torque.

Tightening torque:
36—52 N·m (3.7—5.3 m-kg, 27—38 ft-lb)

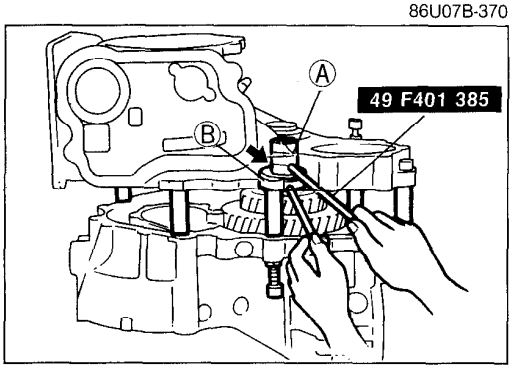

03U0KX-434

Note
- **Seat the bearing.**
- **Bend the bar as shown to turn the SST at B.**

(7) Turn the **SST** (selector) to increase the clearance indicated by the arrow with the **SST** (bars), until it no longer turns.
(8) Turn the selector in the opposite direction until the gap is reduced.

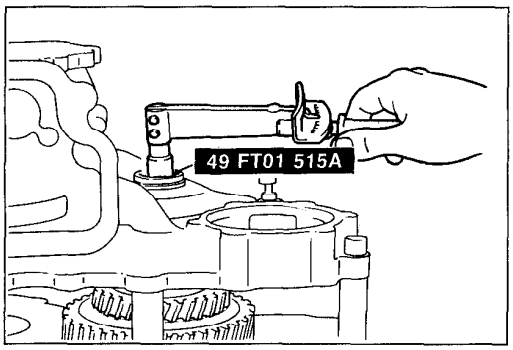

03U0K2-320

(9) Insert the **SST** through the transaxle case and attach it to the side gear.
(10) Mount the **SST** and pull scale or torque wrench.

Note
- **Read the preload when the differential starts to turn.**

(11) Adjust the clearance between A and B to obtain the specified preload/pull scale reading.

Preload: 2.9—3.9 N·m (30—40 cm-kg, 26—35 in-lb)
Reading on pull scale:
29—39 N (3.0—4.0 kg, 6.6—8.8 lb)

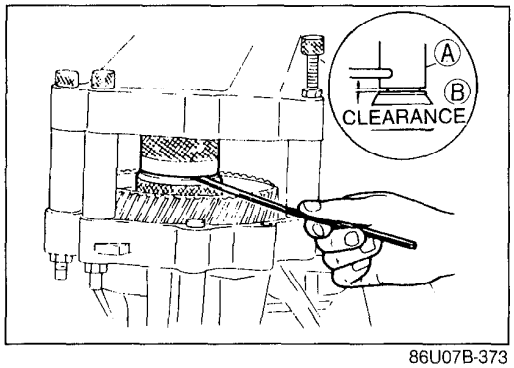

86U07B-373

(12) Measure the clearance between A and B.
(13) Add **0.3mm (0.0118 in)** to the measured clearance, and select the shim(s) closest in value to that measurement.

Caution
- **Measure the clearance around the entire circumference, and select shims based on the maximum clearance.**
- **The maximum allowable number of shims is 3.**

Thickness of shim mm (in)			
0.50 (0.020)	0.55 (0.022)	0.60 (0.024)	0.65 (0.026)
0.70 (0.028)	0.75 (0.030)	0.80 (0.032)	0.85 (0.034)
0.90 (0.035)	0.95 (0.037)	1.00 (0.039)	1.05 (0.041)
1.10 (0.043)	1.15 (0.045)	1.20 (0.047)	1.25 (0.049)
1.30 (0.051)	1.35 (0.053)	1.40 (0.055)	1.45 (0.057)

03U0KX-436

Downloaded from www.Manualslib.com manuals search engine

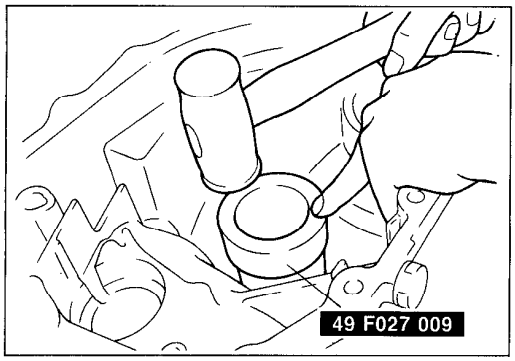

03U0KX-437

(14) Remove the transaxle case and **SST**.
(15) Install the required shim(s) and tap the bearing race into the transaxle case.

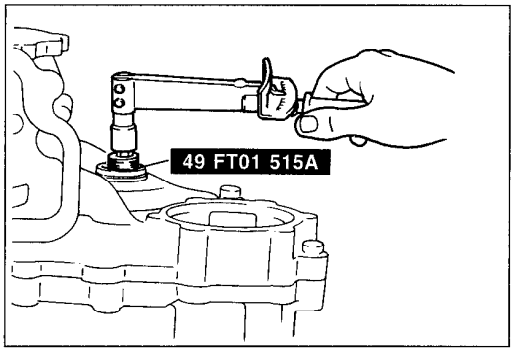

03U0K2-321

(16) Install the transaxle case.

Tightening torque:
37—52 N·m (3.8—5.3 m-kg, 27—38 ft-lb)

(17) Verify that the preload is within specification. If not within specification, return to Step (1).

Preload: 2.9—3.9 N·m (30—40 cm-kg, 26—35 in-lb)

(18) Remove the transaxle case.

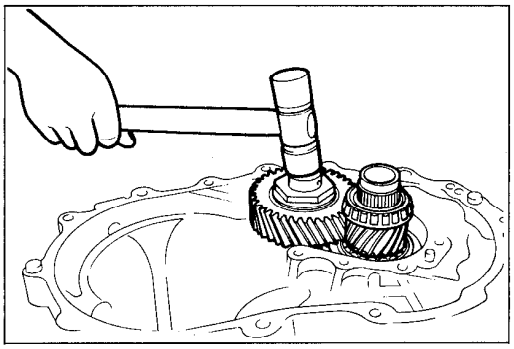
03U0KX-439

3. Install the idler gear and output gear as an assembly by tapping in with a plastic hammer.

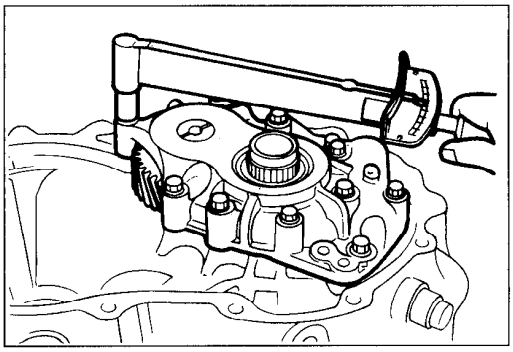
03U0KX-440

4. Install the bearing housing.
   (1) Mount the bearing housing onto the converter housing.

   Tightening torque:
   19—26 N·m (1.9—2.6 m-kg, 14—19 ft-lb)

   (2) Align the groove on the idler shaft with the mark on the bearing housing.
   (3) Tap a new roll pin in with a pin punch and hammer.

Downloaded from www.Manualslib.com manuals search engine

TRANSAXLE AND TRANSFER UNIT (ASSEMBLY)

Preparation

SST

49 G017 5A0 Support, engine	For support of engine	49 G017 503 Hook (Part of 49 G017 5A0)	For support of engine
49 G017 501 Bar (Part of 49 G017 5A0)	For support of engine	49 G017 502 Support (Part of 49 G017 5A0)	For support of engine

03U0K2-255

Precaution

1. If the drive plates or brake band are replaced with new ones, soak the new part in ATF for at least 2 hours before installation.
2. Before assembly, apply ATF to all seal rings, rotating parts, O-rings, and sliding parts.
3. All O-rings, seals, and gaskets must be replaced with the new ones included in the overhaul kit.
4. Use petroleum jelly, not grease, during reassembly.
5. When it is necessary to replace a bushing, replace the subassembly that includes that bushing.
6. Assemble the housing within 10 minutes after applying sealant, and allow it to cure at least 30 minutes after assembly before filling the transaxle with ATF.

03U0KX-442

Downloaded from www.Manualslib.com manuals search engine

Bearing, and race locations

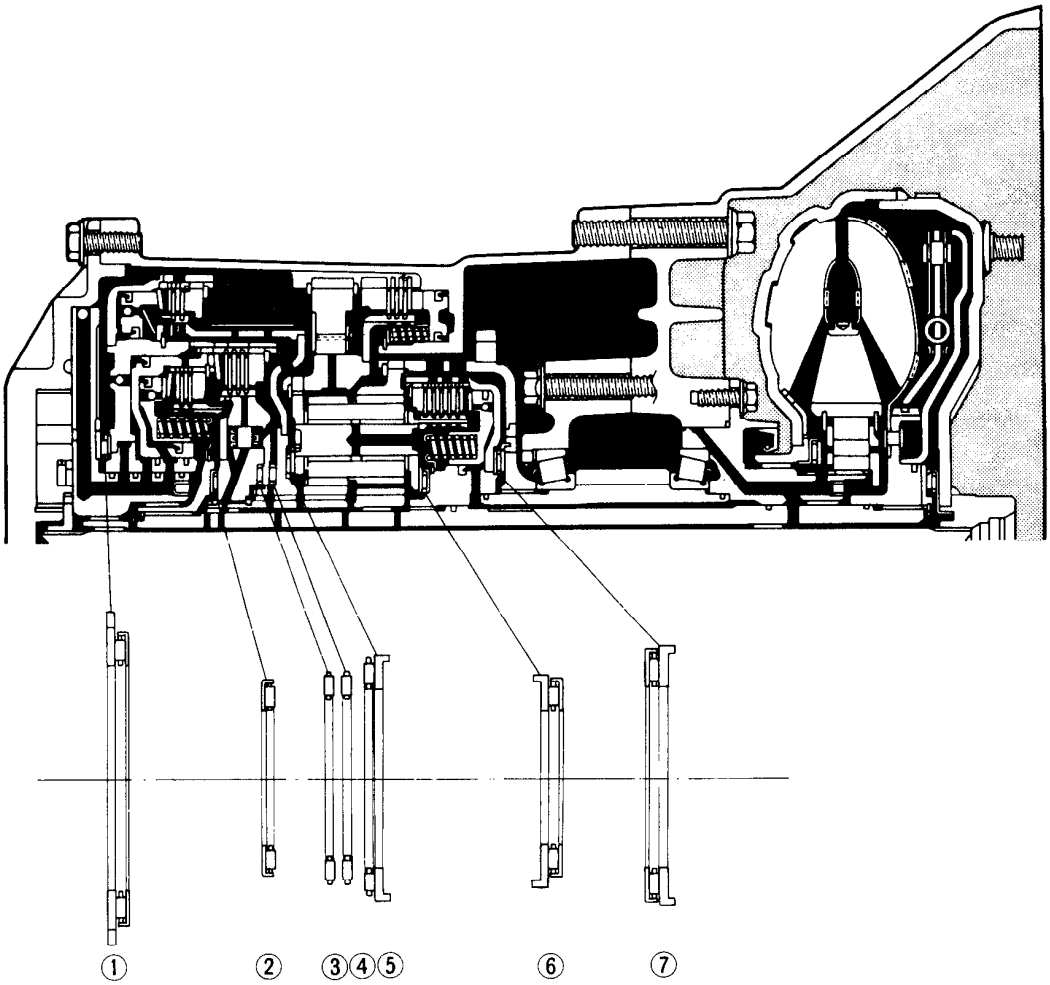

03U0KX-443

Outer diameter of bearing and race

		1	2	3	4	5	6	7
Bearing	mm (in)	86.0 (3.39)	56.1 (2.21)	62.1 (2.44)	62.1 (2.44)	72.0 (2.83)	56.1 (2.21)	72.1 (2.84)
Race	mm (in)	88.0 (3.46)				72.0 (2.83)	57.0	

03U0K2-322

Downloaded from www.Manualslib.com manuals search engine

Assembly

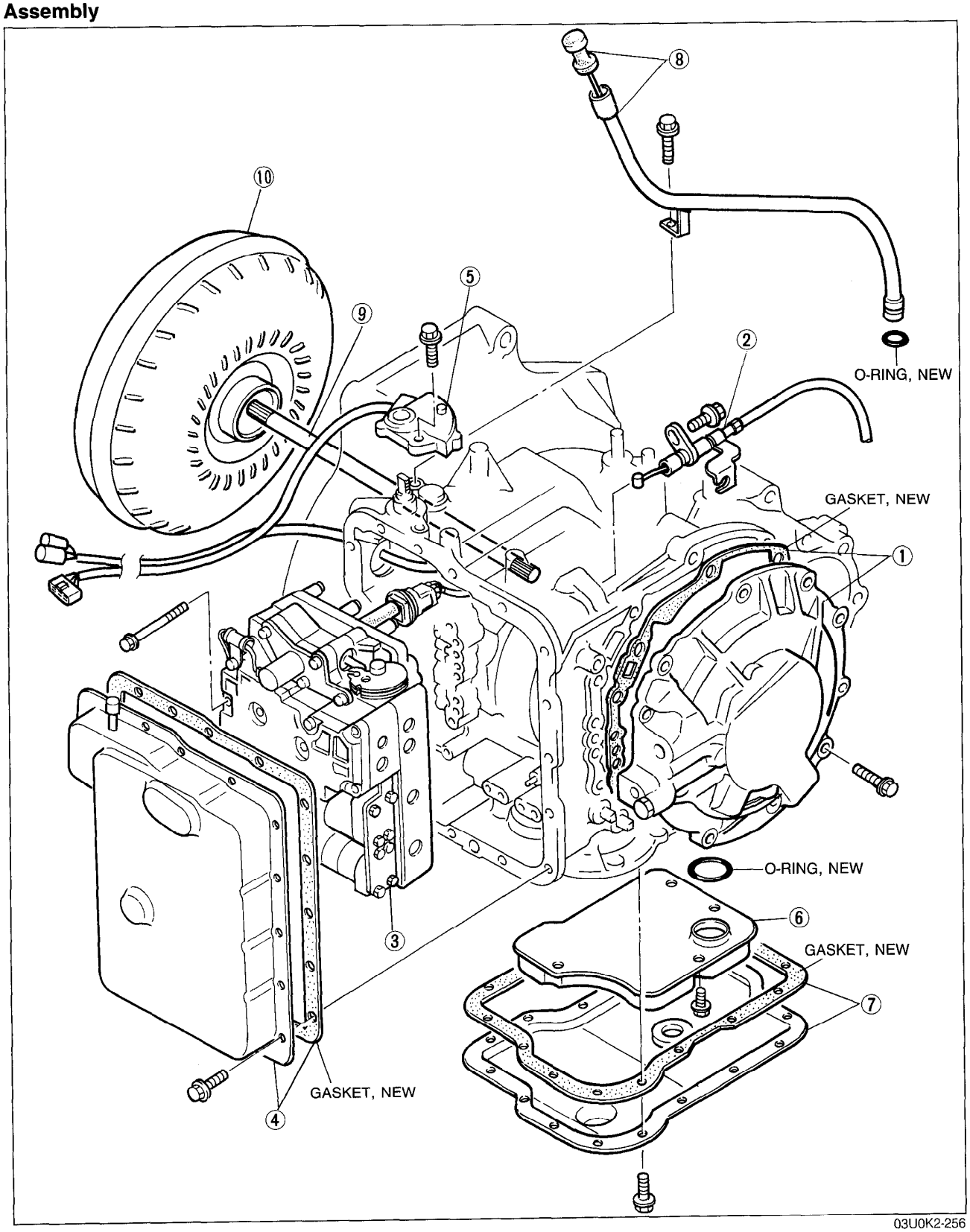

1. Oil pump and gasket
2. Throttle cable
3. Control valve body assembly
4. Oil pan and gasket
5. Inhibitor switch
6. Oil strainer
7. Oil pan and gasket
8. Oil level gauge and oil filler tube
9. Oil pump shaft
10. Torque converter

Downloaded from www.Manualslib.com manuals search engine

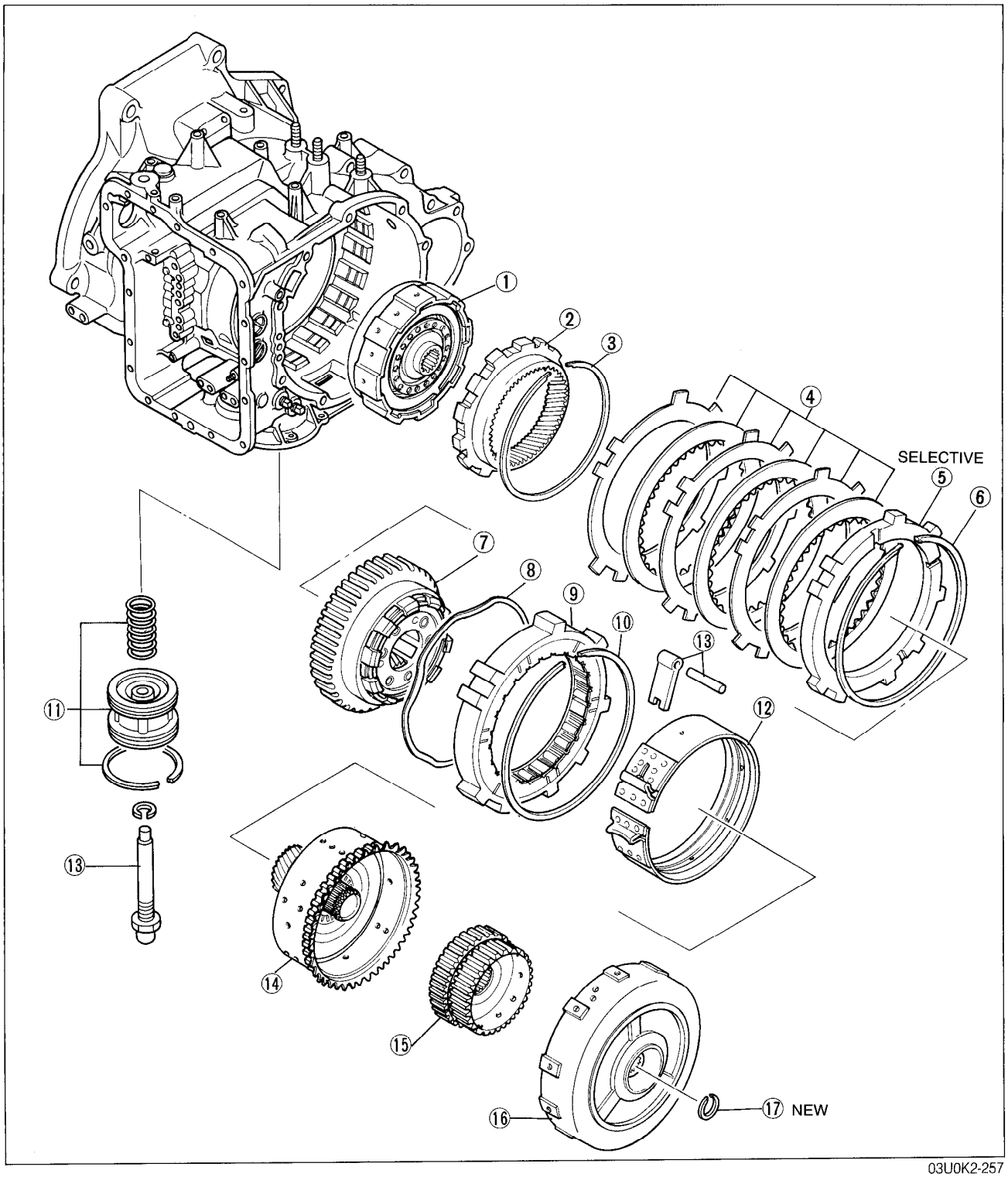

03U0K2-257

1. 3-4 clutch assembly
2. Internal gear
3. Snap ring
4. Low and reverse brake (Drive and drive plates)
5. Retaining plate
6. Snap ring
7. Carrier hub
8. Wave washer
9. One-way clutch
10. Snap ring
11. Servo
12. 2-4 brake band
13. Anchor strut and shaft
14. Small sun gear
15. One-way clutch
16. Clutch assembly
17. Snap ring

Downloaded from www.Manualslib.com manuals search engine

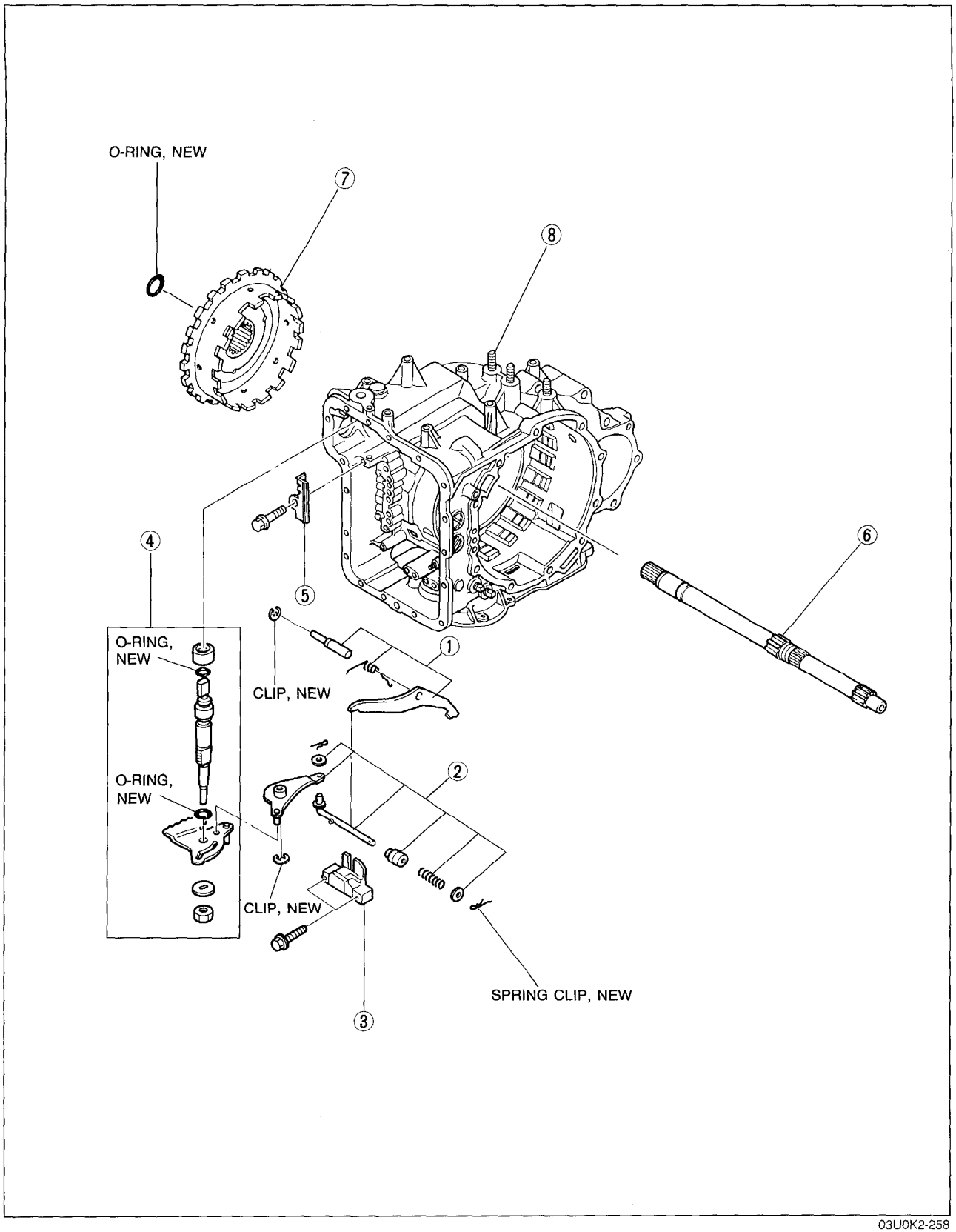

03U0K2-258

1. Parking pawl
2. Parking assist lever
3. Actuator support
4. Manual shaft and manual plate
5. Bracket
6. Turbine shaft
7. Output shell
8. Transaxle case

Downloaded from www.Manualslib.com manuals search engine

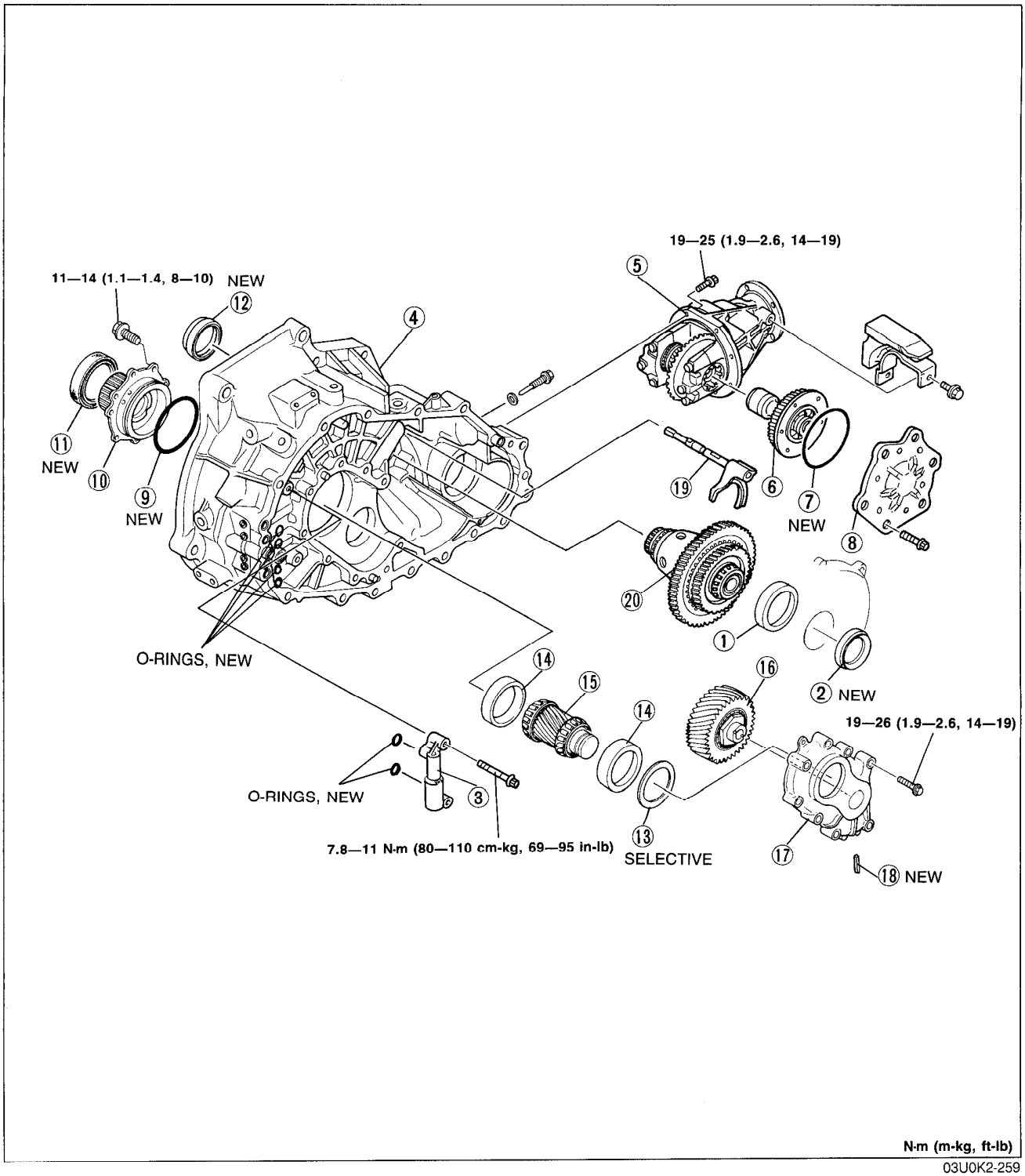

03U0K2-259

1. Bearing outer race (Transaxle case)
2. Oil seal (Transaxle case)
3. 2-3 accumulator
4. Converter housing
5. Transfer carrier assembly
6. Idler gear assembly (Transfer)
7. O-ring
8. Side cover
9. O-ring
10. Bearing cover
11. Oil seal (Bearing cover)
12. Oil seal
13. Adjustment shim
14. Bearing outer race
15. Output gear
16. Idler gear assembly (Transaxle)
17. Bearing housing
18. Roll pin
19. Front and center differential shift fork
20. Front and center differential assembly

Downloaded from www.Manualslib.com manuals search engine

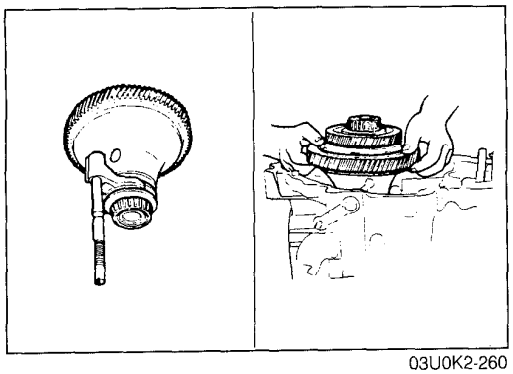

03U0K2-260

1. Assemble the center differential lock shift fork assembly to the center differential assembly, and install the center differential assembly into the clutch housing.
2. Install the set bolt.

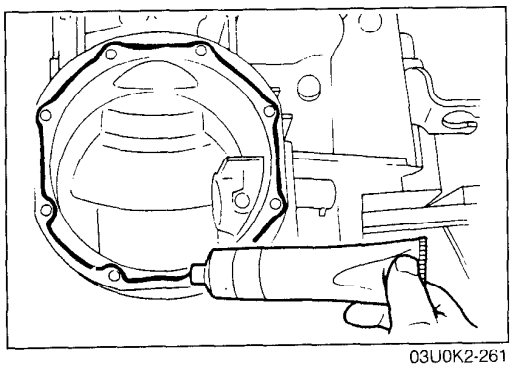

03U0K2-261

Note
- **Before coating with sealant, clean the contact surfaces.**

3. Coat both surfaces with sealant.

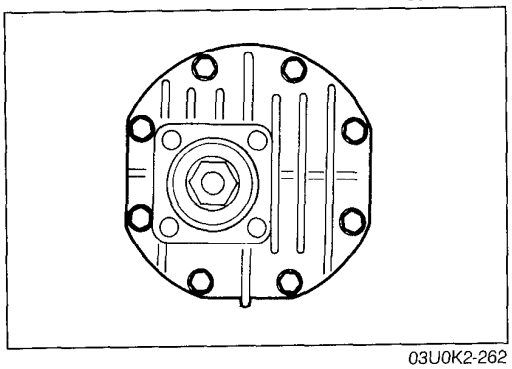

03U0K2-262

4. Install the transfer carrier assembly.

Tightening torque:
25—30 N·m (2.5—3.1 m-kg, 18—22 ft-lb)

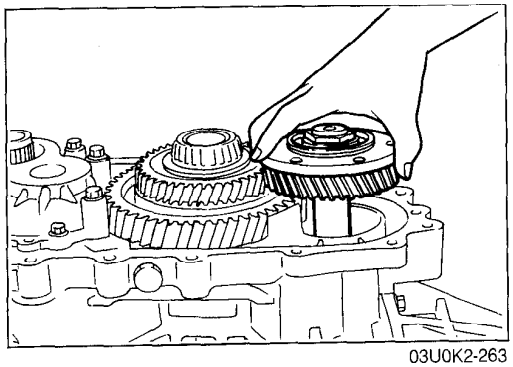

03U0K2-263

5. Install the idle gear.

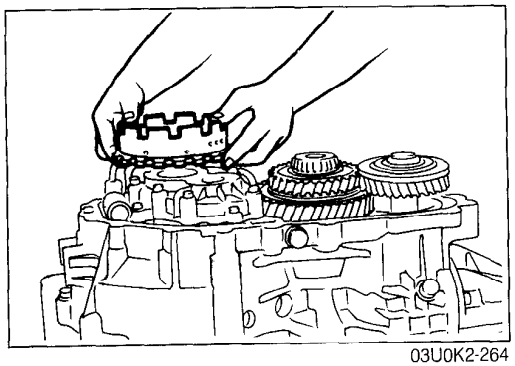

03U0K2-264

6. Install the output shell to the output gear, and install the bearing race onto the output shell.

Thrust bearing outer diameter: 72.1mm (2.84 in)

Downloaded from www.Manualslib.com manuals search engine

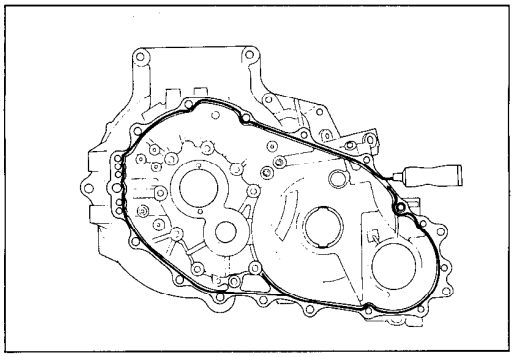

03U0K2-265

7. Apply a thin coat of silicone sealant to the contact surfaces of the converter housing and transaxle case.
8. Install the new O-rings.
9. Mount the transaxle case to the converter housing.

Tightening torque:
37—52 N·m (3.8—5.3 m-kg, 27—38 ft-lb)

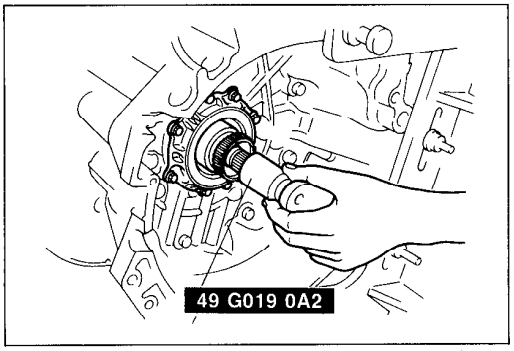

03U0K2-266

10. Install the **SST** to hold the turbine shaft.

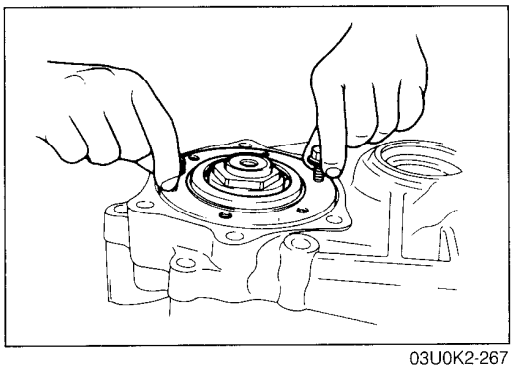

03U0K2-267

11. Lift the idle gear slightly.
12. Install a new oil seal.

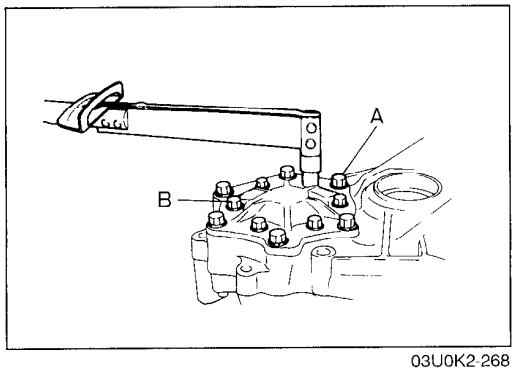

03U0K2-268

Note
- **Before coating with sealant, clean the contact surfaces.**

13. Coat the side cover and the converter housing with sealant.
14. Install the side cover.

Tightening torque:
A 37—52 N·m (3.8—5.3 m-kg, 27.5—38.3 ft-lb)
B 19—25 N·m (1.9—2.6 m-kg, 14—19 ft-lb)

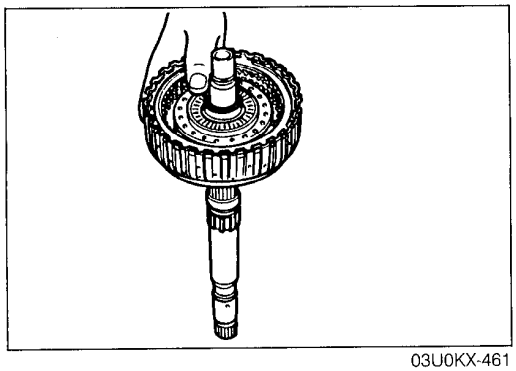

03U0KX-461

15. Install the turbine shaft and 3-4 clutch assembly.
    (1) Assemble the turbine shaft and 3-4 clutch assembly.

Downloaded from www.Manualslib.com manuals search engine

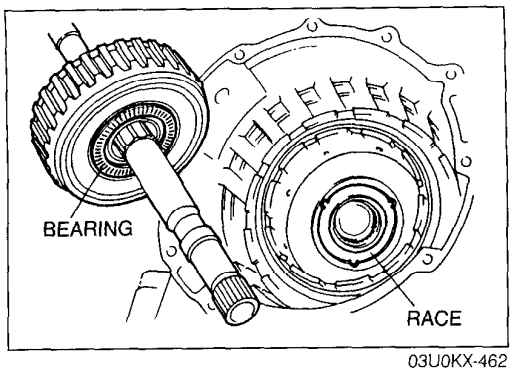

03U0KX-462

(2) Verify that the thrust bearing is properly installed.
(3) Install the turbine shaft and 3-4 clutch assembly into the transaxle case.

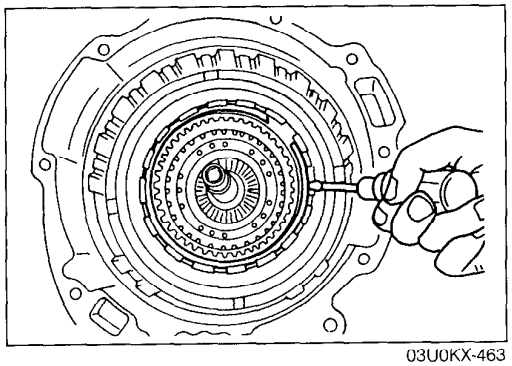
03U0KX-463

16. Install the internal gear.
    (1) Install the internal gear to the 3-4 clutch drum.
    (2) Install the snap ring.

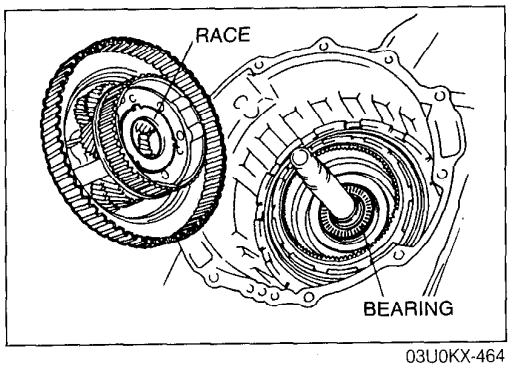

03U0KX-464

17. Install the carrier hub assembly.
    (1) Verify that the thrust bearing and bearing race are properly installed.

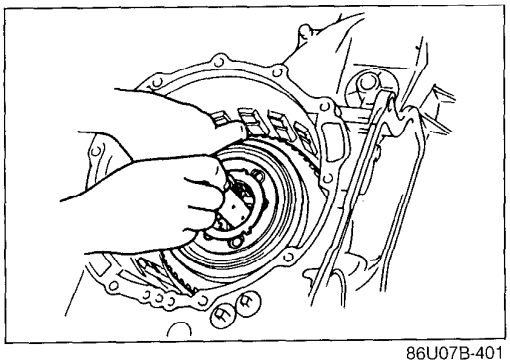
86U07B-401

(2) Hold the turbine shaft with one hand to prevent it from rotating.
(3) Install the carrier hub assembly into the 3-4 clutch drum by rotating it.

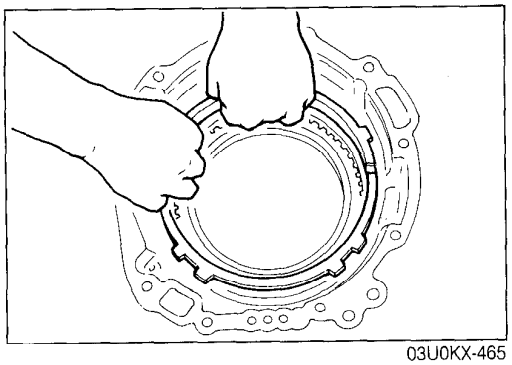
03U0KX-465

18. Install the drive and driven plates.

Note
- **Installation order:**
  Driven-Drive-Driven-Drive-Driven-Drive-Driven-Drive

Downloaded from www.Manualslib.com manuals search engine

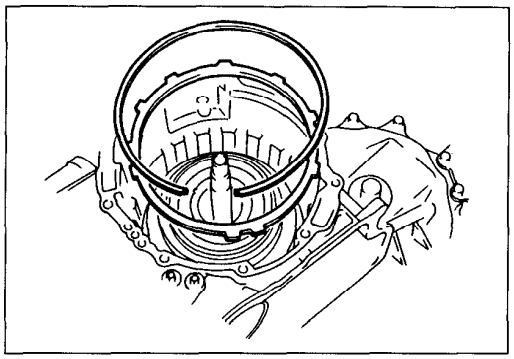

03U0KX-466

19. Install the retaining plate.
20. Install the snap ring.

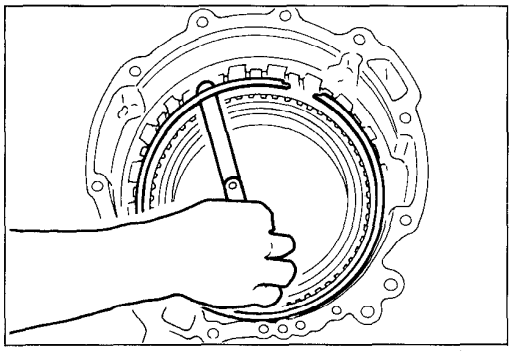

03U0K2-269

21. Check the low and reverse brake clearance.
    (1) Measure the clearance between the snap ring and the low and reverse brake retaining plate.
    (2) If the clearance is not within specification, adjust it by selecting a proper retaining plate.

Low and reverse brake clearance:
2.1—2.4mm (0.083—0.094 in)

Retaining plate sizes

mm (in)

6.8 (0.268)	7.0 (0.276)	7.2 (0.283)
7.4 (0.291)	7.6 (0.299)	7.8 (0.307)

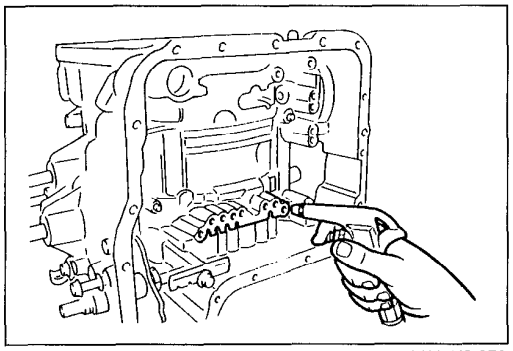

03U0K2-270

22. Check the low and reverse brake operation by applying compressed air through the fluid passage as shown in the figure.

Air pressure: 392 kPa (4.0 kg/cm^2, 57 psi)

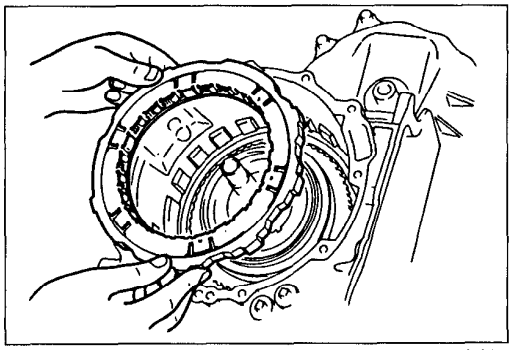

03U0K2-271

23. Install the wave washer.
24. Install the one-way clutch.
    (1) Hold the one-way clutch horizontally.
    (2) Install it by turning the carrier hub assembly counter-clockwise.
    (3) Install the snap ring.

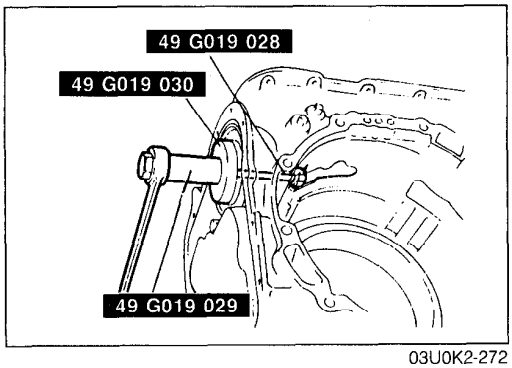

03U0K2-272

25. Install the servo to the transaxle case.
    (1) Install the servo spring and servo.
    (2) Compress the servo with the **SST**.
    (3) Install the snap ring.
    (4) Remove the **SST**.
    (5) Install the piston stem.

Downloaded from www.Manualslib.com manuals search engine

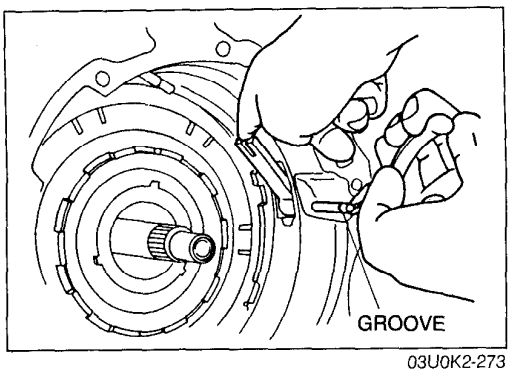

03U0K2-273

26. Install the anchor strut.

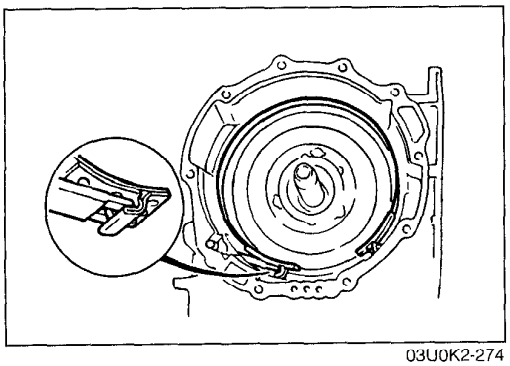
03U0K2-274

Note
- **Interlock the 2-4 brake band and anchor strut as shown.**

27. Install the 2-4 brake band in the transaxle case so that it is fully expanded.

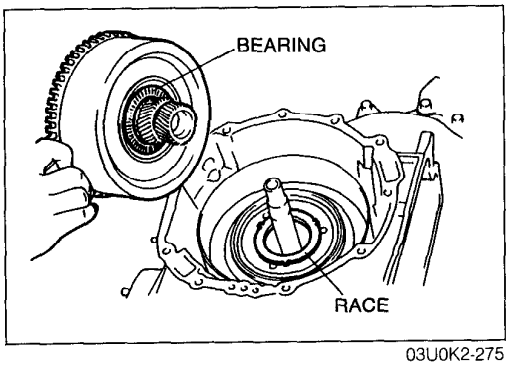

03U0K2-275

28. Install the small sun gear and one-way clutch.
    (1) Verify that the thrust bearing and bearing race are installed in the correct position.

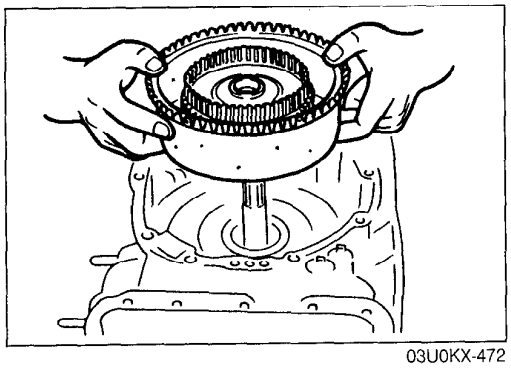
03U0KX-472

    (2) Install the small sun gear and one-way clutch while rotating it.

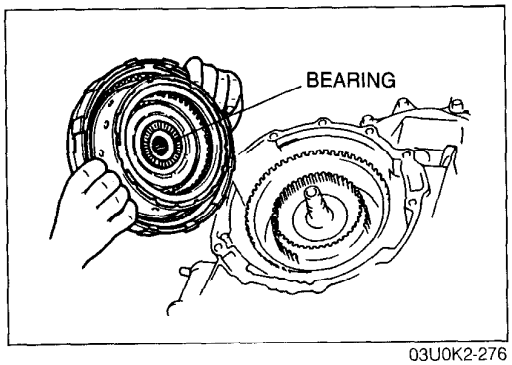

03U0K2-276

29. Install the clutch assembly.
    (1) Verify that the thrust bearing is installed in the correct position.

Downloaded from www.Manualslib.com manuals search engine

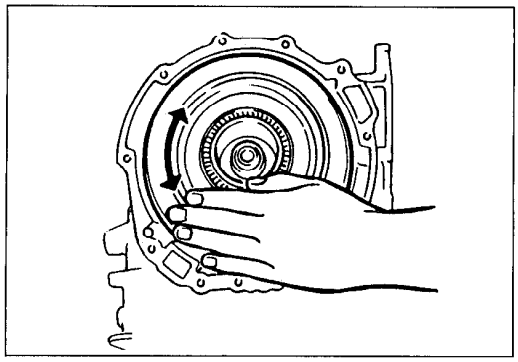

03U0KX-474

(2) Install the clutch assembly while rotating it.

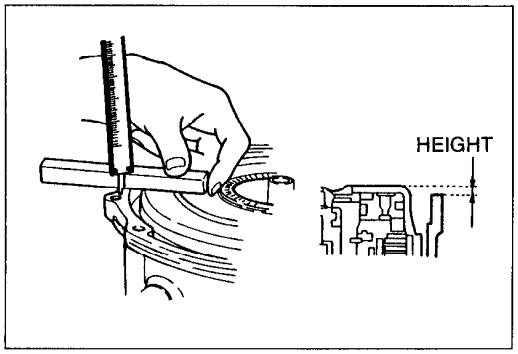

03U0KX-475

Note

- **Measure the height difference between the reverse and forward drum and the transaxle case.**

Maximum: 0.9mm (0.035 in)

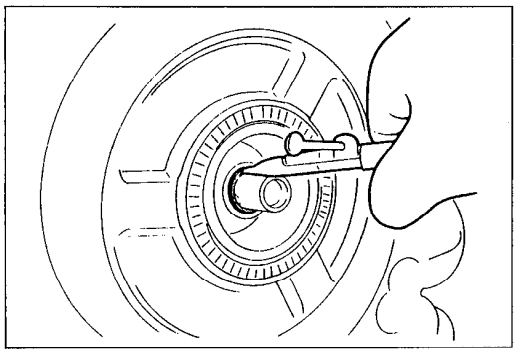

03U0K2-277

30. Install the snap ring into the bottom ring groove of the turbine shaft.

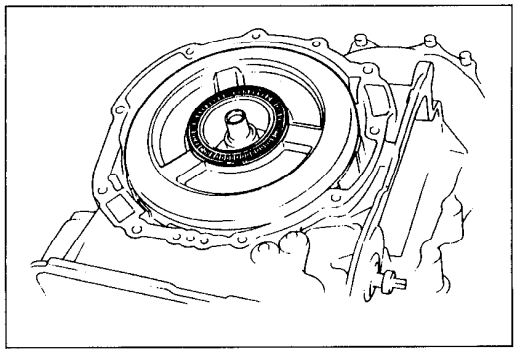

03U0K2-278

31. Use the following procedure to adjust the total end play and select a suitable bearing race.
    (1) Set the thrust bearing onto the clutch assembly.

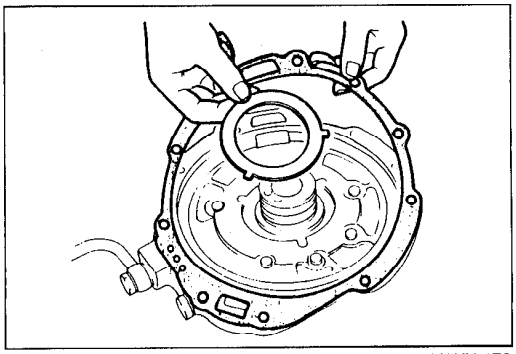

03U0KX-478

(2) Remove the previously used race and gasket.
(3) Set the thickest bearing race **2.2mm (0.087 in)** onto the oil pump.
(4) Set the oil pump onto the clutch assembly.

Downloaded from www.Manualslib.com manuals search engine

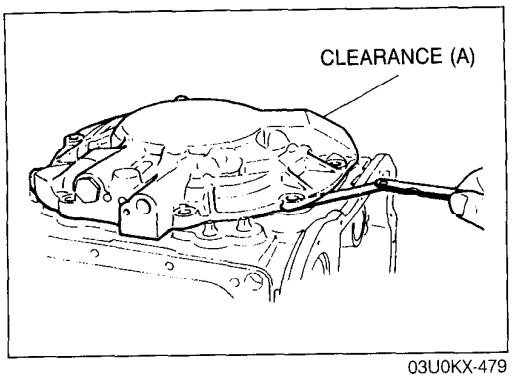

03U0KX-479

(5) Measure clearance A between the transaxle case and the oil pump.
(6) Select a suitable bearing race from the chart below.

Clearance A mm (in)	Select this bearing race mm (in)
0.91—1.10 (0.036—0.043)	1.2 (0.047)
0.71—0.90 (0.028—0.035)	1.4 (0.055)
0.51—0.70 (0.020—0.027)	1.6 (0.063)
0.31—0.50 (0.012—0.019)	1.8 (0.071)
0.11—0.30 (0.004—0.011)	2.0 (0.078)
0—0.10 (0—0.003)	2.2 (0.087)

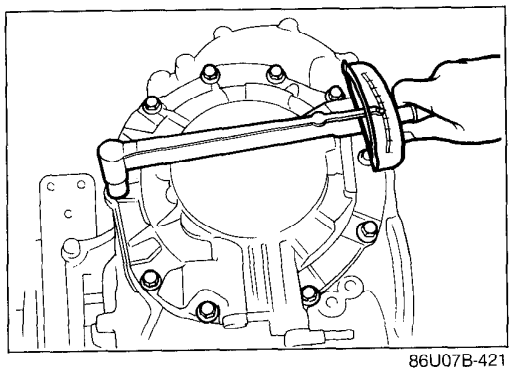
86U07B-421

(7) Remove the oil pump.
(8) Place the selected bearing race and a new gasket onto the oil pump.
(9) Install the oil pump onto the clutch assembly.

Tightening torque:
19—26 N·m (1.9—2.6 m-kg, 14—19 ft-lb)

32. Adjust the 2-4 brake band.
(1) Loosen the locknut and tighten the piston stem to the specified torque.

Tightening torque:
9—11 N·m (90—110 cm-kg, 78—95 in-lb)

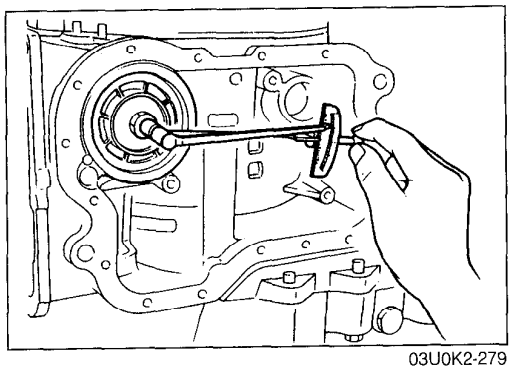
03U0K2-279

(2) Loosen the piston stem 2 turns.
(3) Hold the piston stem and tighten the locknut to the specified torque.

Tightening torque:
25—39 N·m (2.5—4.0 m-kg, 18—29 ft-lb)

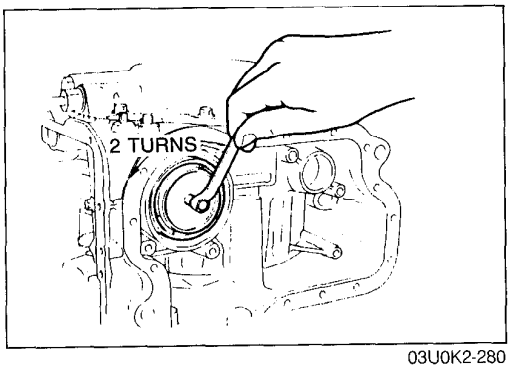

03U0K2-280

33. Install the oil strainer along with a new O-ring to the transaxle.

Tightening torque:
8—11 N·m (80—110 cm-kg, 69—95 in-lb)

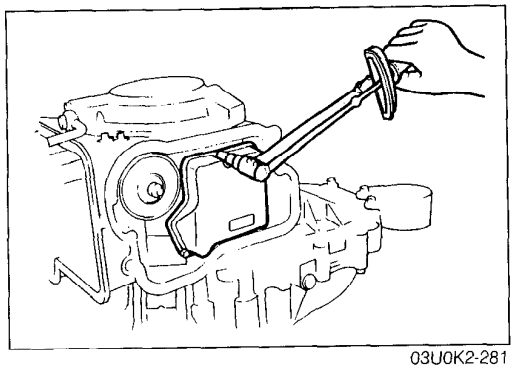
03U0K2-281

Downloaded from www.Manualslib.com manuals search engine

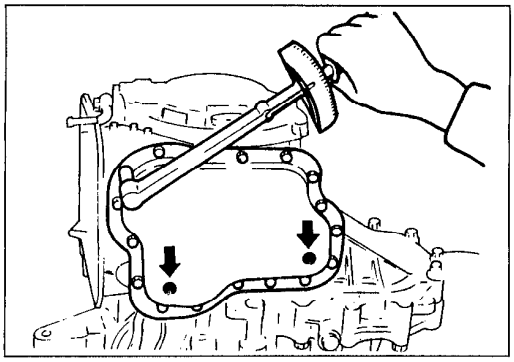

03U0K2-282

34. Install the oil pan along with a new gasket.

Tightening torque:
8—11 N·m (85—110 cm-kg, 74—95 in-lb)

Note
- **Install the magnets in the positions shown in the illustration.**

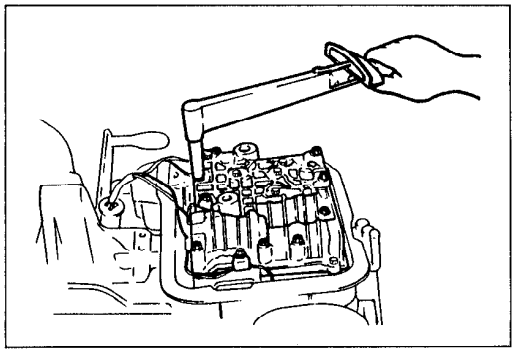

03U0K2-283

35. Align the manual valve with the pin on the manual plate, and install the control valve body into the transaxle case.

Tightening torque:
11—15 N·m (110—150 cm-kg, 95—130 in-lb)

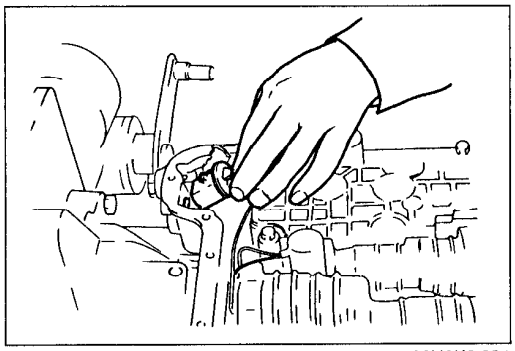

03U0K2-284

36. Install the solenoid connector and a new O-ring in the transaxle case.

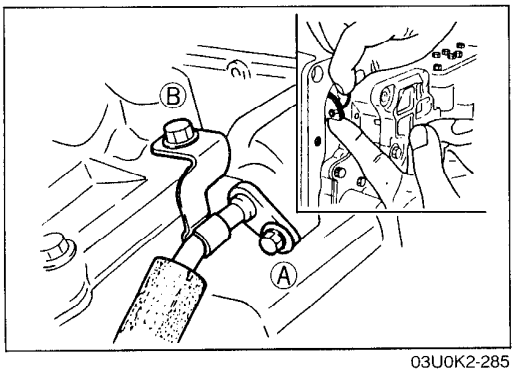

03U0K2-285

37. Install a new O-ring on the bracket; then feed the throttle cable through the transaxle case and connect it to the throttle lever.
38. Install the throttle cable bracket and attaching bolts.

Tightening torque:
Ⓐ 8—11 N·m (80—110 cm-kg, 69—95 in-lb)
Ⓑ 19—26 N·m (1.9—2.6 m-kg, 14—19 ft-lb)

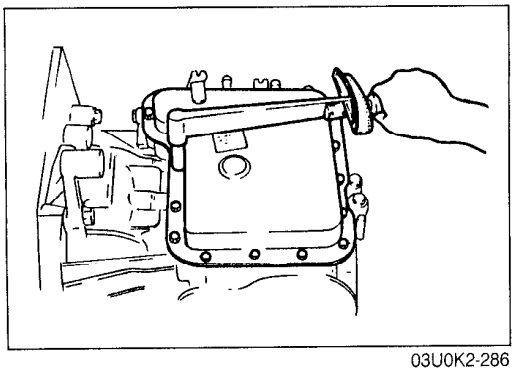

03U0K2-286

39. Install the control valve body cover along with a new gasket.

Tightening torque:
8—11 N·m (85—110 cm-kg, 74—95 in-lb)

Downloaded from www.Manualslib.com manuals search engine

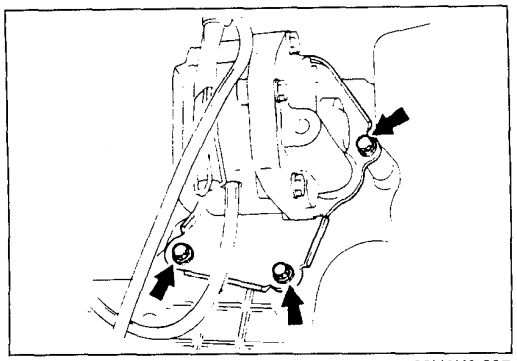

03U0K2-287

40. Install the center differential lock assembly.

Tightening torque:
19—25 N·m (1.9—2.6 m-kg, 14—19 ft-lb)

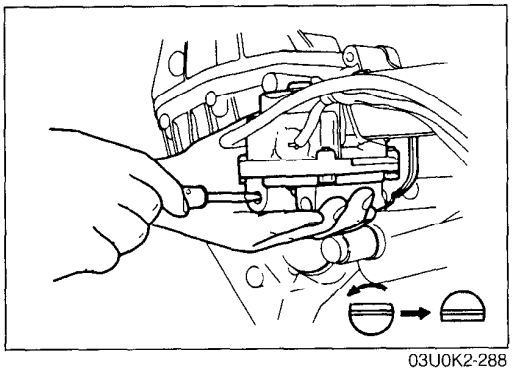

03U0K2-288

41. Turn the rod 180° counterclockwise with a flat-tipped screwdriver.
42. Install the bolts.

Tightening torque:
9—14 N·m (90—140 cm-kg, 78—122 ft-lb)

43. Install the differential lock switch.

Tightening torque:
20—29 N·m (2—3 m-kg, 14—22 ft-lb)

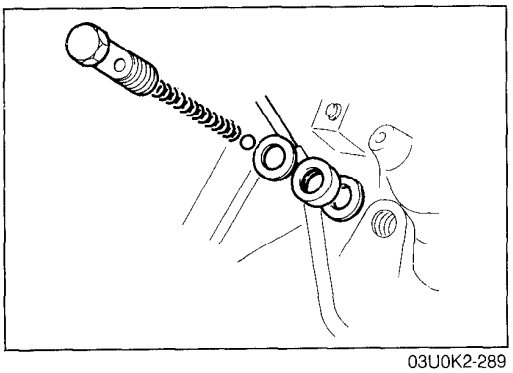

03U0K2-289

44. Install the ball, spring, gasket, and a plug.

Tightening torque:
31—47 N·m (3.2—4.8 m-kg, 23—35 ft-lb)

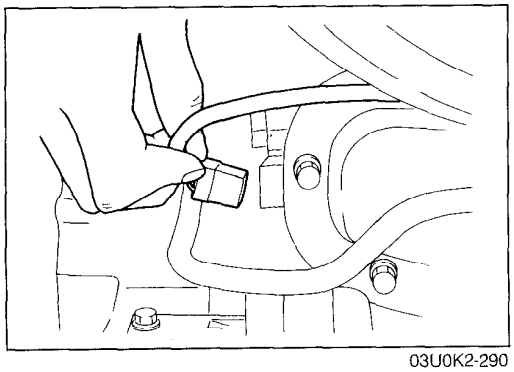

03U0K2-290

45. Install the solenoid connector.

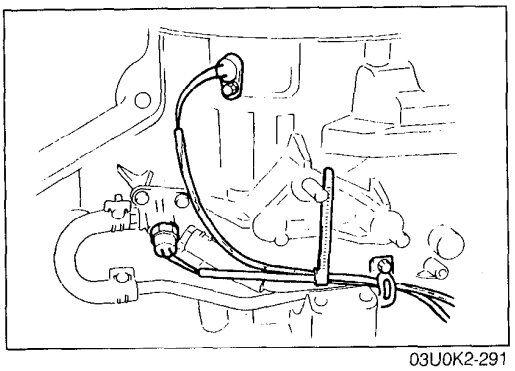

03U0K2-291

46. Install the pulse generator and fluid thermoswitch.

Tightening torque:
Pulse generator
8—11 N·m (80—110 cm-kg, 69—95 in-lb)
Fluid thermoswitch
29—39 N·m (3.0—4.0 m-kg, 22—29 in-lb)

Downloaded from www.Manualslib.com manuals search engine

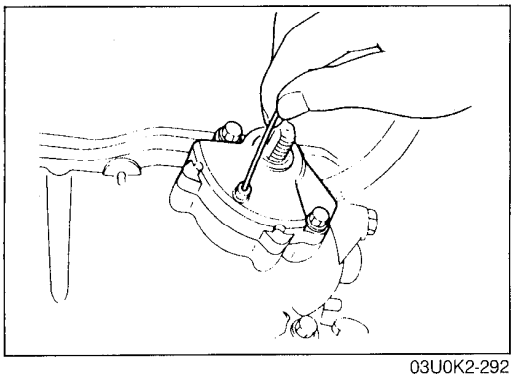

03U0K2-292

47. Install the inhibitor switch.
    (1) Turn the manual shaft to the N position.
    (2) Install the inhibitor switch and loosely tighten the bolts.
    (3) Remove the screw and move the inhibitor switch so that the small alignment hole is aligned with the screw hole.
    (4) Set the alignment by inserting an **approx. 2.0mm (0.079 in)** diameter pin through the holes.
    (5) Tighten the bolts to the specified torque.

    Tightening torque:
    8—11 N·m (80—110 cm-kg, 69—95 in-lb)

    (6) Remove the pin, and install and tighten the screw to specification.

    Tightening torque:
    0.4—0.7 N·m (4—7 cm-kg, 4—6 in-lb)

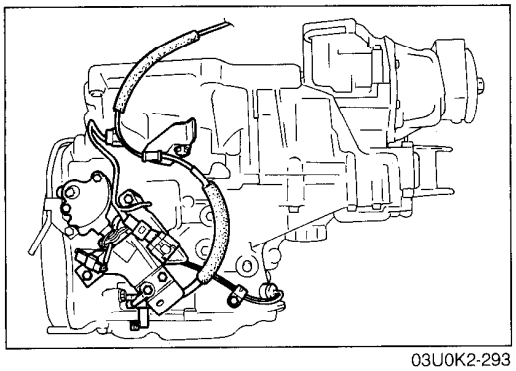

03U0K2-293

48. Install the harness with the remaining clip.

    Tightening torque:
    8—11 N·m (80—110 cm-kg, 69—95 in-lb)

49. Remove the transaxle from the **SST**.
50. Install a new O-ring and install the oil level gauge and oil filler tube to the transaxle case.

    Tightening torque:
    7—10 N·m (70—100 cm-kg, 61—87 in-lb)

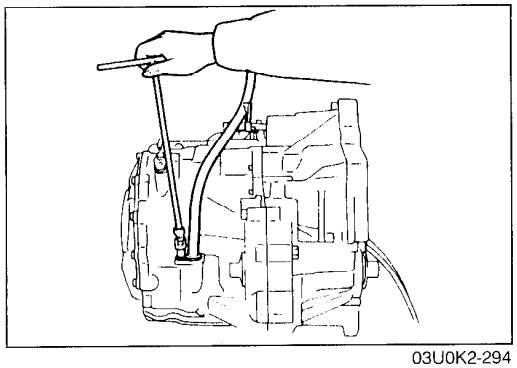

03U0K2-294

51. Install the oil pump shaft.
52. Install a new O-ring onto the turbine shaft.

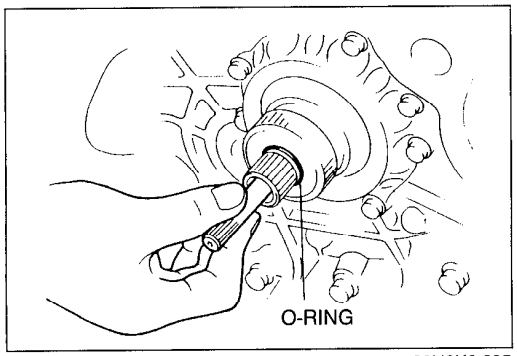

03U0K2-295

53. Fill the torque converter with ATF if it has been drained and washed.

    ATF type: M-III or DEXRON-II

    Caution
    - **Hold the torque converter in an erect position when filling it with ATF, do not allow the fluid to overflow.**
    - **If the converter does not fit in easily, do not try to force it; install carefully.**

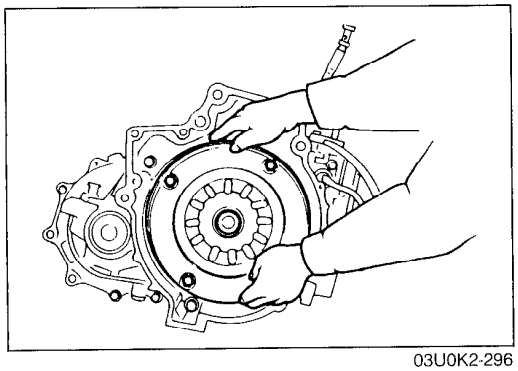

03U0K2-296

54. Install the torque converter in the converter housing while rotating it to align the splines.

Downloaded from www.Manualslib.com manuals search engine

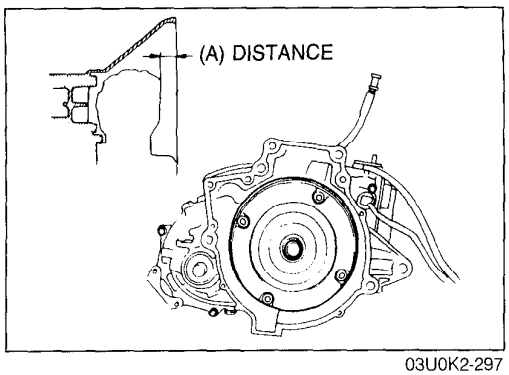

03U0K2-297

55. To ensure that the torque converter is installed accurately, measure distance A between the end of the torque converter and the end of the converter housing.

(A): 13.6mm (0.535 in)

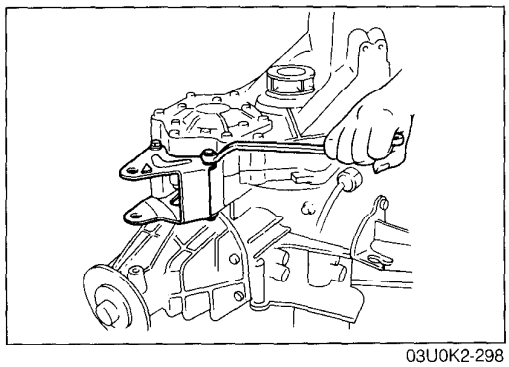

03U0K2-298

56. Install engine mount No.1.

Tightening torque:
58—67 N·m (5.9—6.8 m-kg, 43—49 ft-lb)

Downloaded from www.Manualslib.com manuals search engine

INSTALLATION

1. Install in the reverse order of removal, referring to **Installation Note**.
2. Fill the transaxle with the specified ATF after installation.

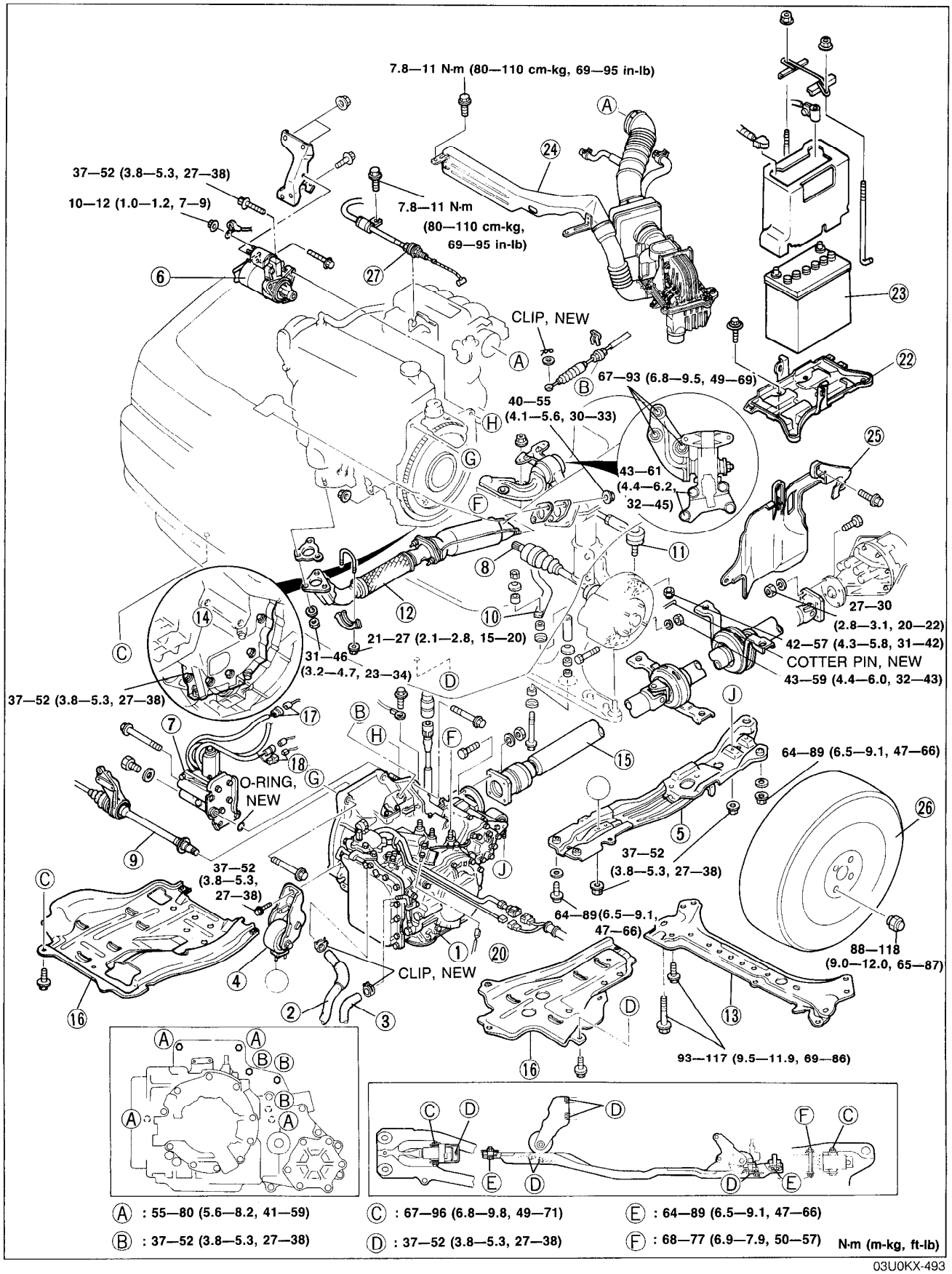

Downloaded from www.Manualslib.com manuals search engine

1. Transaxle and transfer
   Installation Note..... page K2–277
2. Oil hose (Outlet side)
   Installation Note..... page K2–277
3. Oil hose (Inlet side)
   Installation Note..... page K2–277
4. Engine mount No.2
5. Engine mounting member
   Installation Note..... page K2–278
6. Starter
7. Center differential lock motor
8. Driveshaft
   Installation Note..... page K2–278
9. Joint shaft
10. Stabilizer
    Installation Note..... page K2–279
11. Tie-rod end
12. Exhaust pipe
13. Cross member
14. Integrated stiffener
15. Propeller shaft
    Installation Note..... page K2–279
16. Under cover
17. Differential lock sensor switch connector
18. Differential lock motor connector
19. Solenoid valve connector
20. Inhibitor switch connector
21. Speedometer cable
    Installation Note..... page K2–279
22. Battery carrier
23. Battery
24. Air hose and air cleaner assembly
25. Splash shield
26. Wheel and tire
27. Throttle cable
    Installation Note..... page K2–279

03U0K2-299

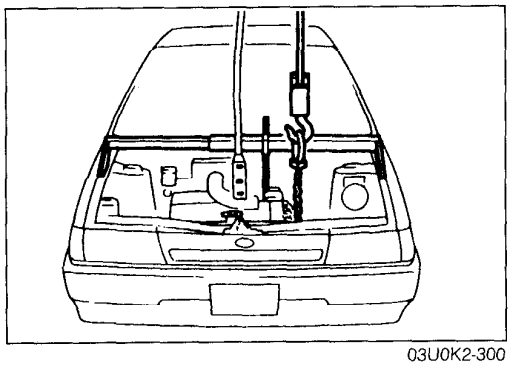

03U0K2-300

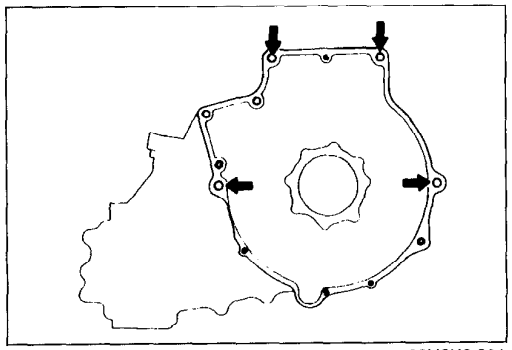

03U0K2-301

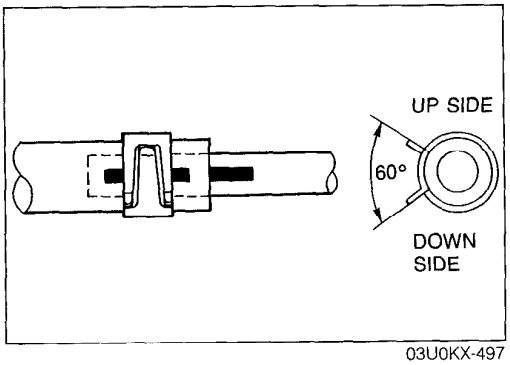

03U0KX-497

Installation Note
Transaxle and transfer

Caution
- ***Do not lean the transaxle and transfer to torque converter side.***

1. Use an engine hoist, and install the transaxle and transfer.
2. Mount the transaxle and transfer to the engine.

3. Install the bolt.

Tightening torque:
55—80 N·m (5.6—8.2 m-kg, 41—59 ft-lb)

Oil hose (inlet and outlet side)
1. Align the marks, and slide the oil cooler hose onto the oil cooler pipe until it is fully seated against the ridge.
2. Install the hose clamp onto the hose at the center of the mark and at the angle shown.
3. Verify that the hose clamp does not interfere with any other parts.

Downloaded from www.Manualslib.com manuals search engine

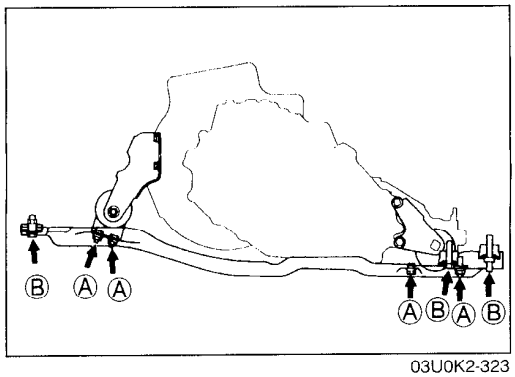

03U0K2-323

Engine mounting member

1. Tighten the bolts as shown.

Tightening torque:
A 37—52 N·m (3.8—5.3 m-kg, 27—38 ft-lb)
B 64—89 N·m (6.5—9.1 m-kg, 47—66 ft-lb)

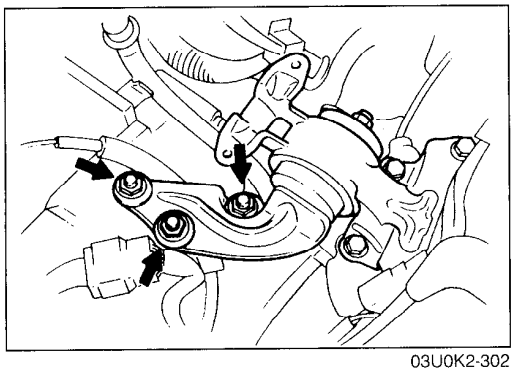
03U0K2-302

2. Tighten the engine mount No.4 nuts.

Tightening torque:
66—93 N·m (6.8—9.5 m-kg, 49—68 ft-lb)

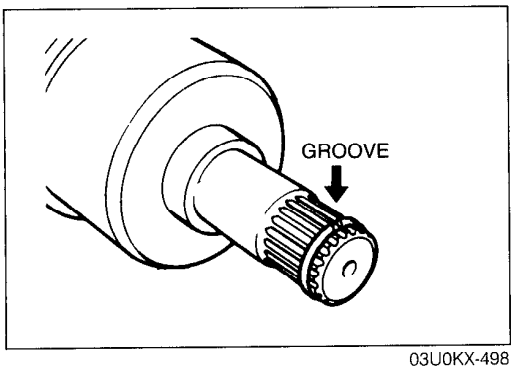

03U0KX-498

Driveshaft

Caution
- **Do not damage the oil seal.**
- **After installation, pull the front hub outward to verify that the driveshaft is secured.**

1. Replace the clips at the ends of the driveshafts and joint shaft with new ones.
2. Push the driveshafts into the differential with the groove of clips upward.

Note
- **Apply ATF to the oil seal lip.**

3. Install the driveshaft.

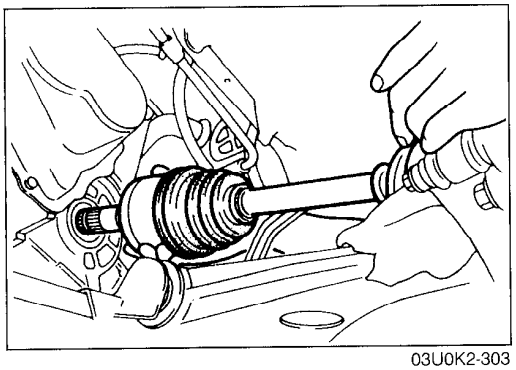
03U0K2-303

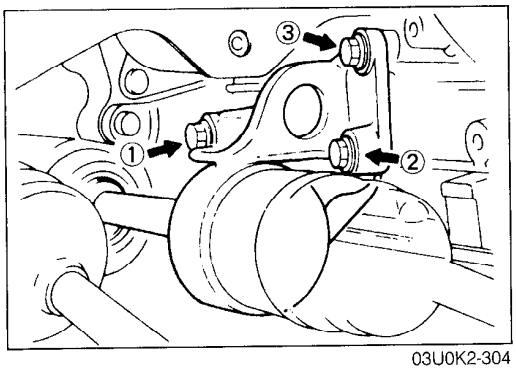

03U0K2-304

4. Tighten the joint shaft mounting bolts in the order shown.

Tightening torque:
42—62 N·m (4.3—6.3 m-kg, 31—46 ft-lb)

Downloaded from www.Manualslib.com manuals search engine

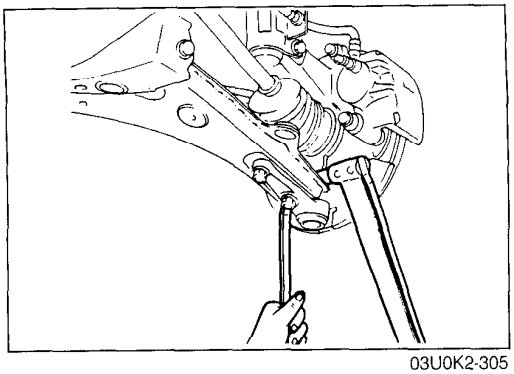

03U0K2-305

5. Install the lower arm ball joint to the knuckle and tighten the bolt.

Tightening torque:
43—58 N·m (4.4—6.0 m-kg, 32—43 ft-lb)

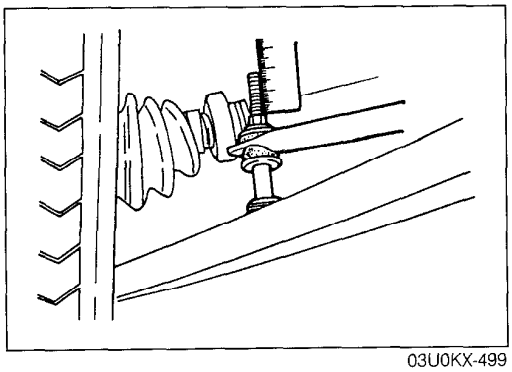

03U0KX-499

Stabilizer

1. Tighten the stabilizer nut so that **17mm (0.67 in)** to **19mm (0.75 in)** of thread is exposed at the end of the bolt.

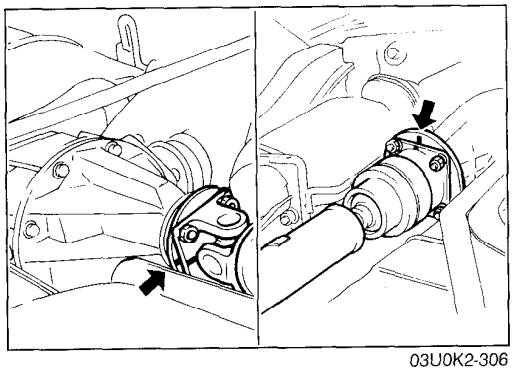

03U0K2-306

Propeller shaft

1. Align the marks and install the propeller shaft. (Refer to Section L.)

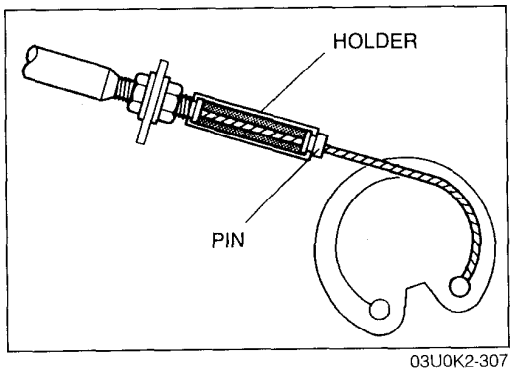

03U0K2-307

Throttle cable

1. Connect the throttle cable.
2. Adjusting the throttle cable. (Refer to page K2–137.)

Downloaded from www.Manualslib.com manuals search engine

OIL COOLER

OIL COOLER

Removal / Inspection / Installation

Remove in the order shown in the figure.
Inspect all parts and repair or replace as necessary.
Install in the reverse order of removal, referring to **Installation Note**.

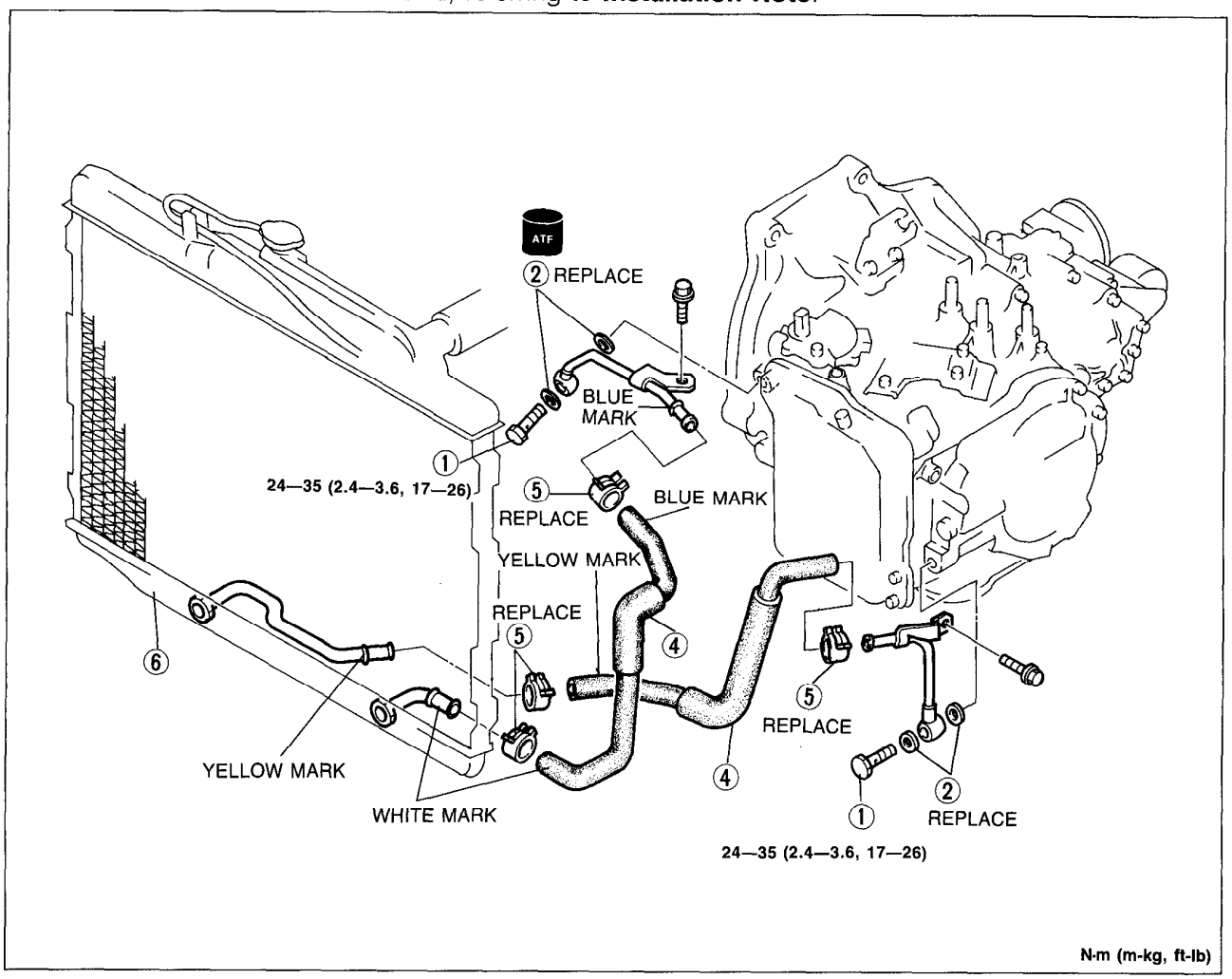

93G0K2-093

1. Connector bolts
   Inspect for clogging
2. Packing
3. Oil pipes
   Inspect for damage or cracks
4. Oil hoses
   Inspect for damage or cracks
   Installation note ..... page K2–253
5. Hose clamps
6. Radiator
   Service ..... Section E

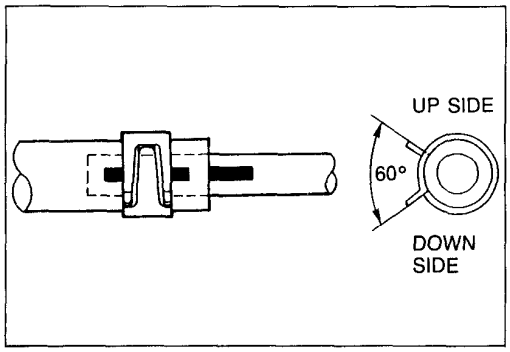

03U0KX-503

Installation note

Oil hose

1. Align the marks, and slide the oil cooler hose onto the oil cooler pipe until it is fully seated against the ridge.
2. Install the hose clamp onto the hose at the center of the mark and at the angle shown.
3. Verify that the hose clamp does not interfere with any other parts.

Downloaded from www.Manualslib.com manuals search engine

HYDRAULIC CIRCUIT

P RANGE

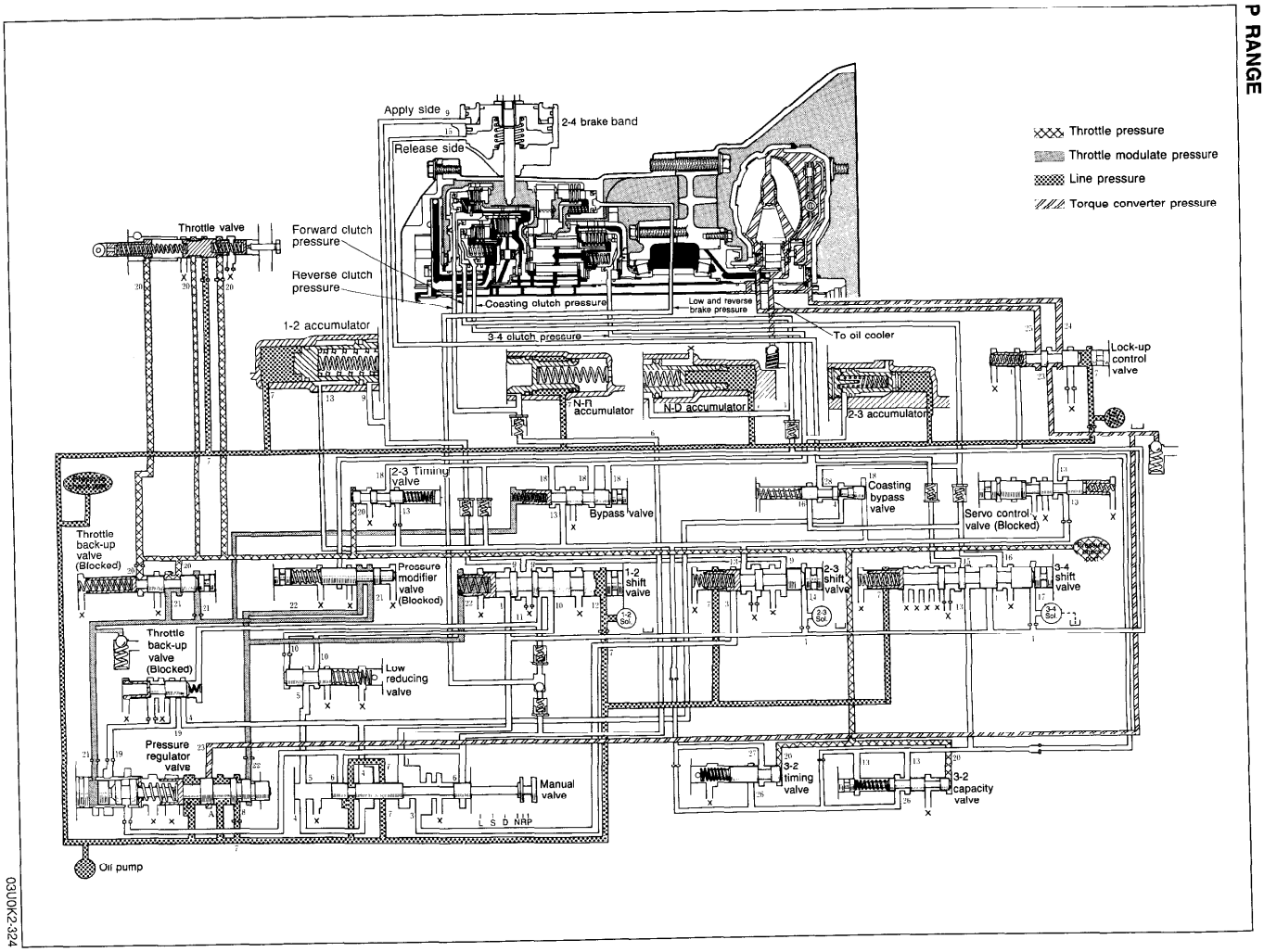

Downloaded from www.Manualslib.com manuals search engine

R RANGE

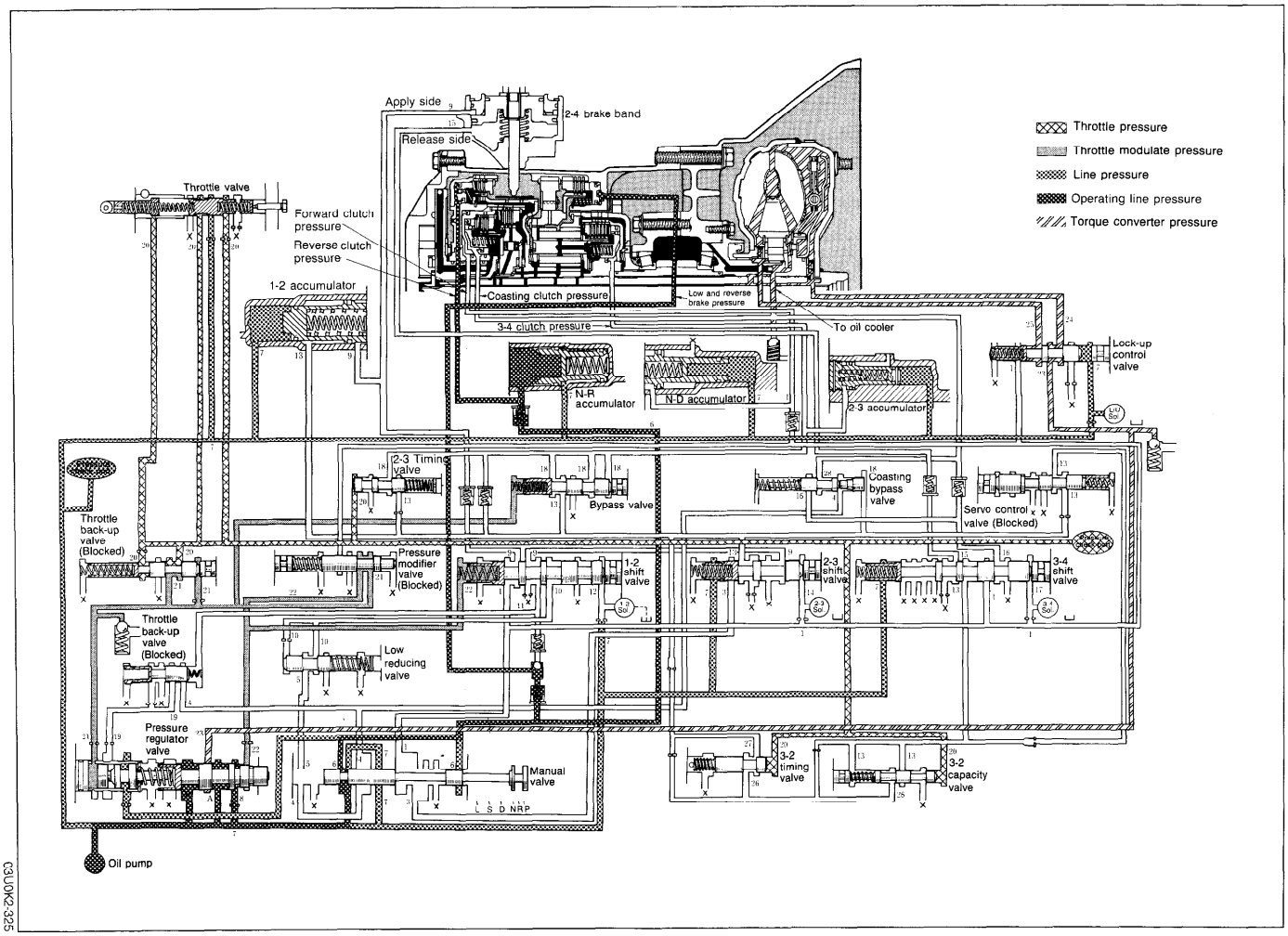

Downloaded from www.Manualslib.com manuals search engine

N RANGE; BELOW APPROX. 18 km/h (11 mph)

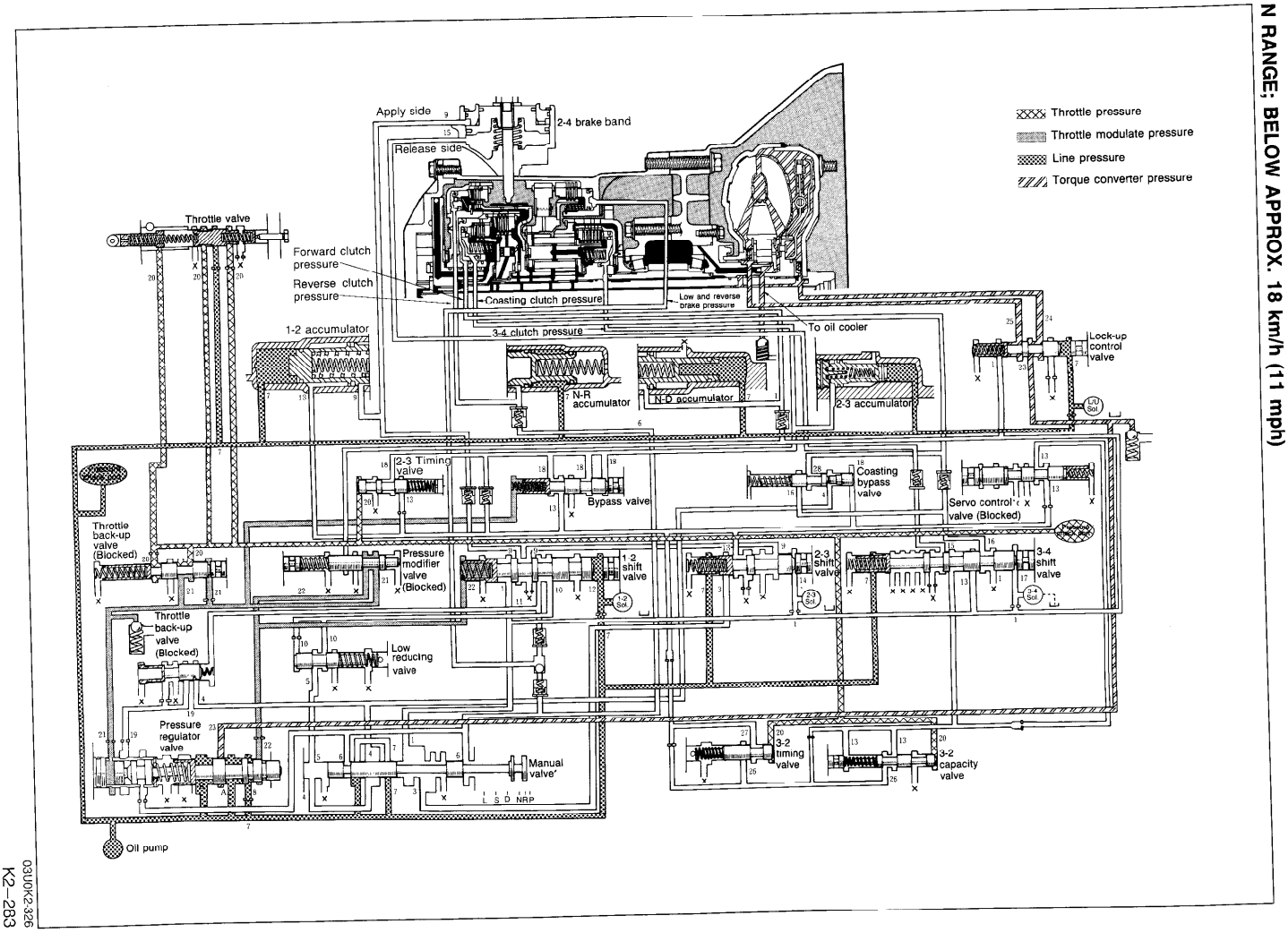

Downloaded from www.Manualslib.com manuals search engine

N RANGE; ABOVE APPROX. 18 km/h (11 mph)

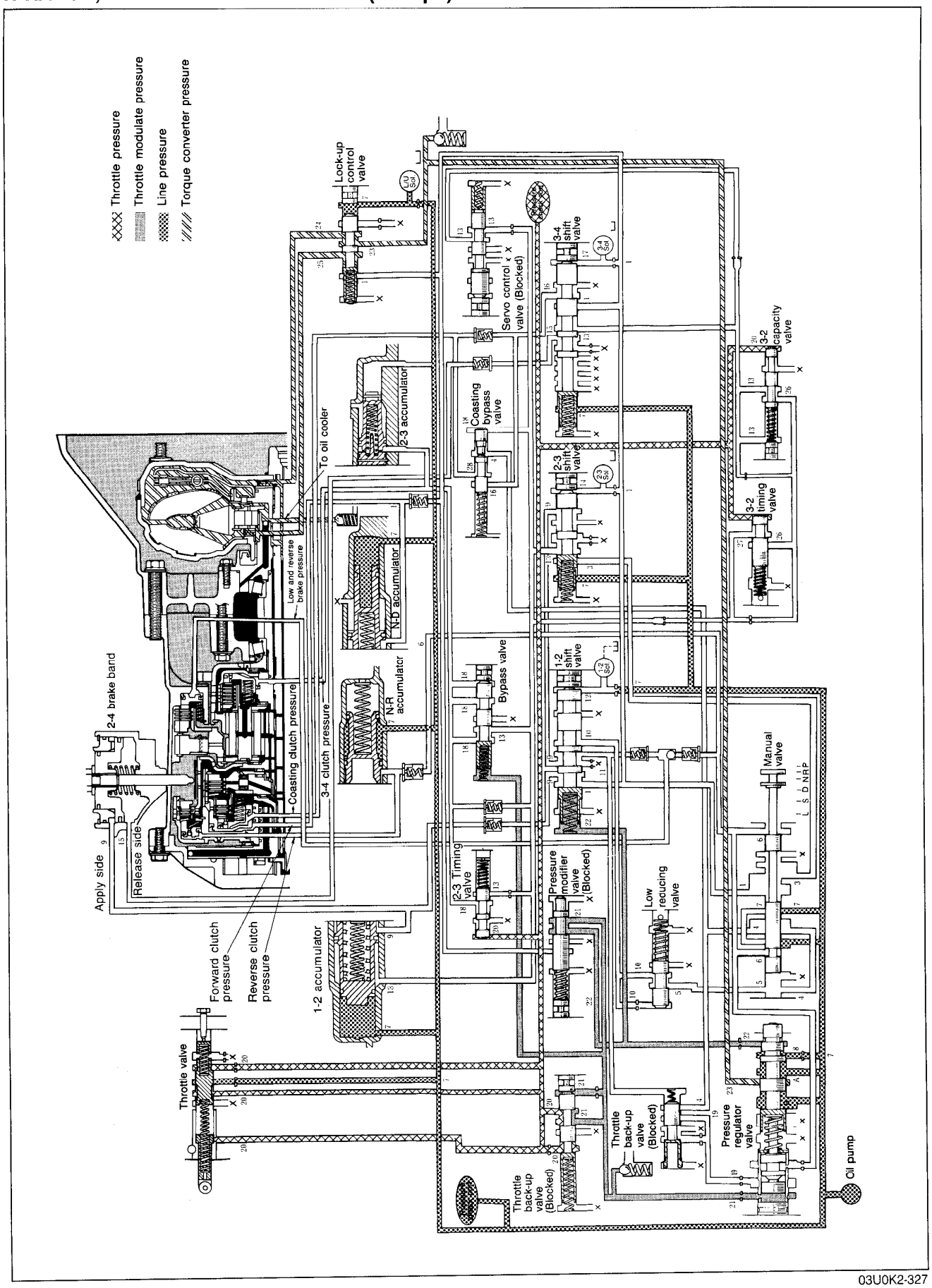

03U0K2-327

Downloaded from www.Manualslib.com manuals search engine

D RANGE; 1ST GEAR

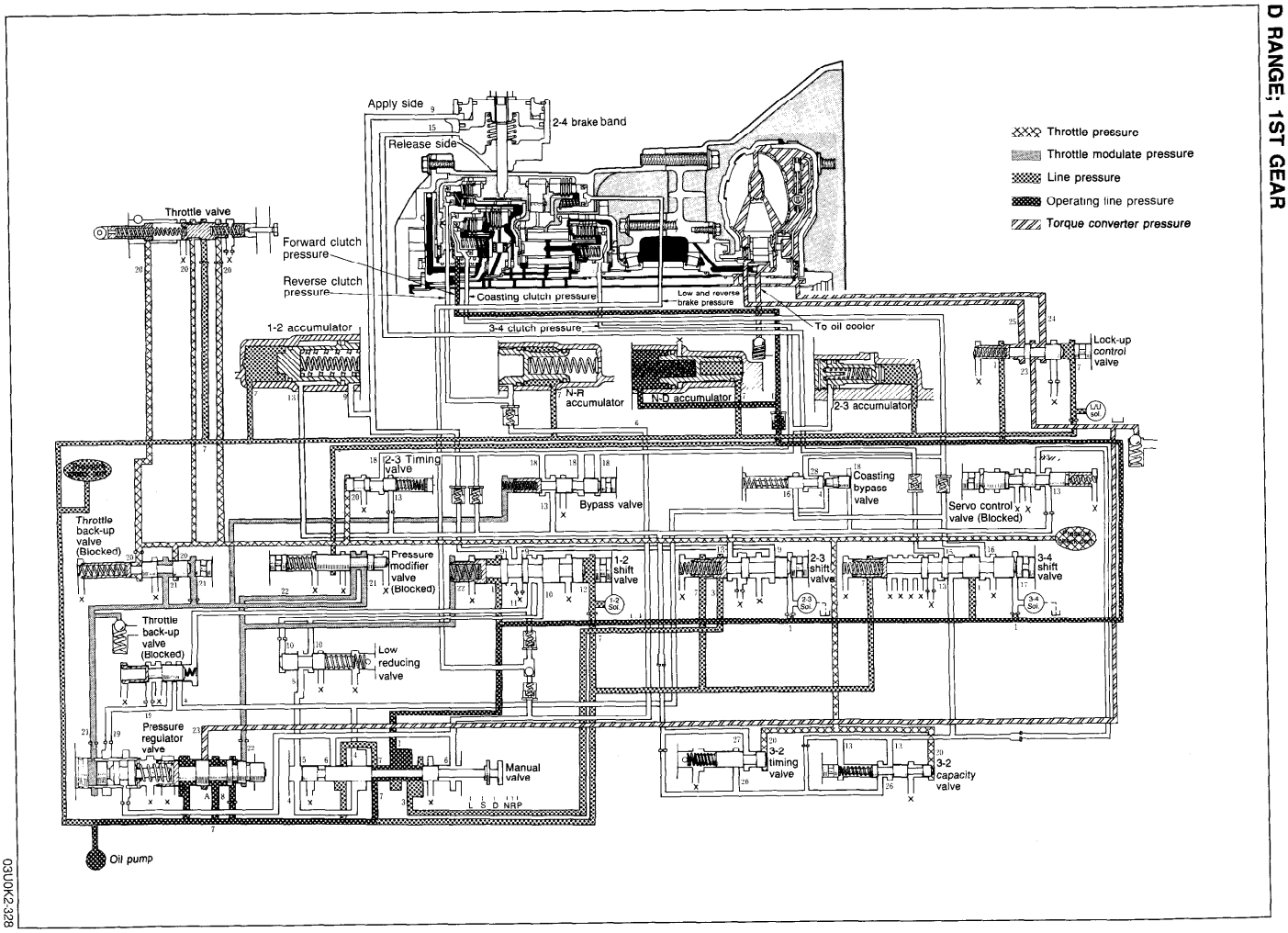

Downloaded from www.Manualslib.com manuals search engine

D RANGE; 2ND GEAR

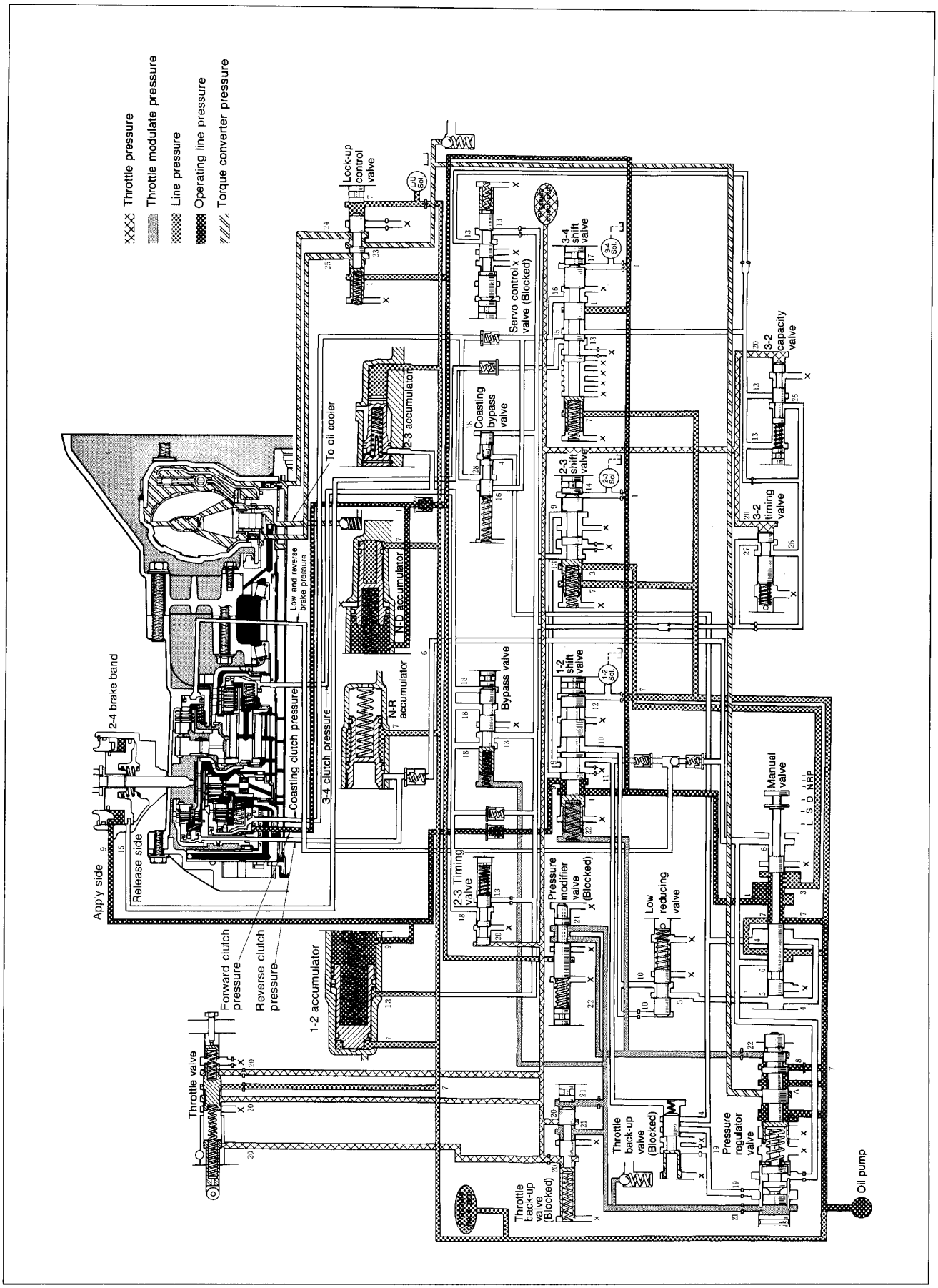

03U0K2-329

Downloaded from www.Manualslib.com manuals search engine

D RANGE; 3RD GEAR BELOW APPROX. 40 km/h (25 mph)

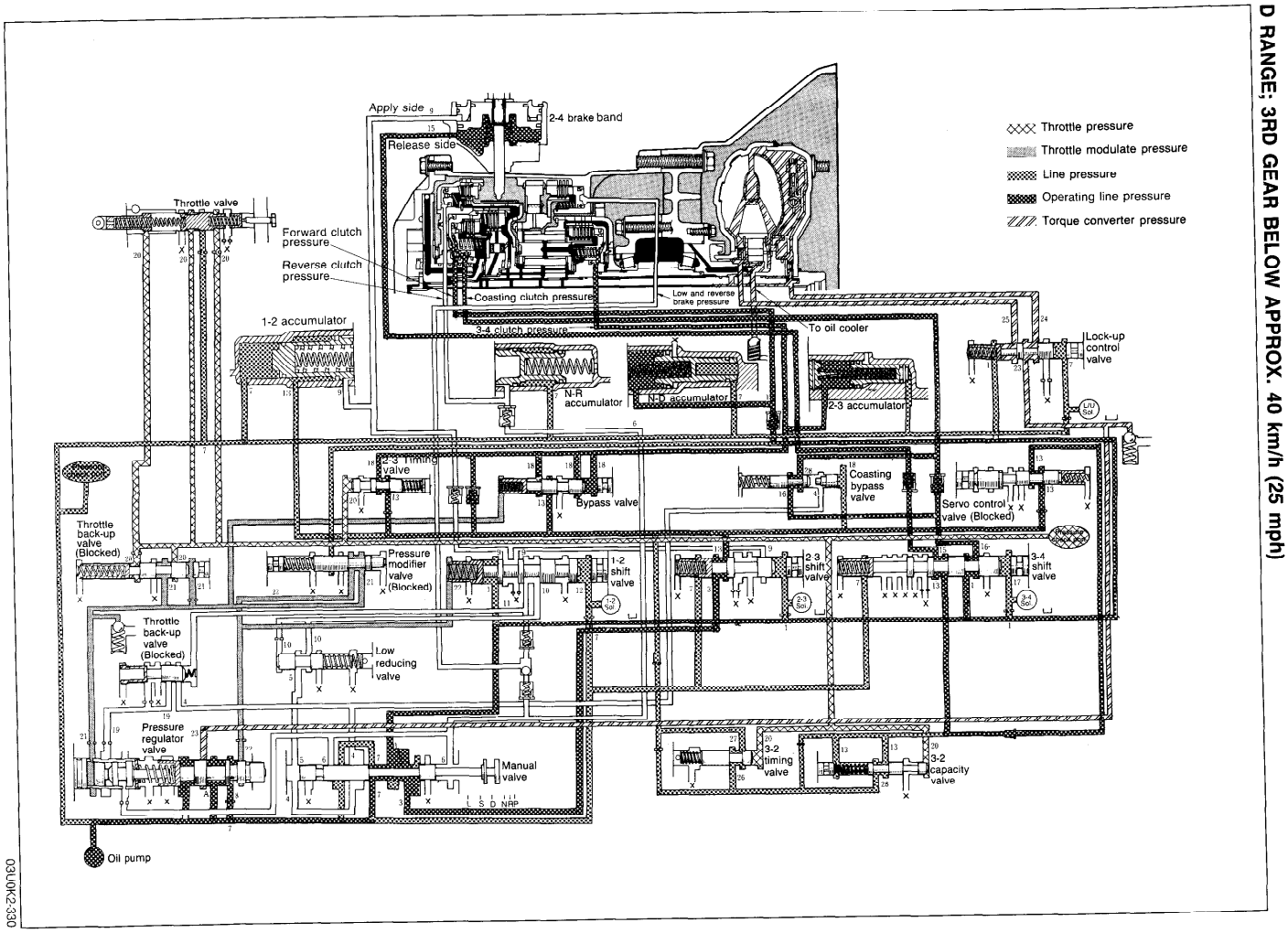

Downloaded from www.Manualslib.com manuals search engine

HYDRAULIC CIRCUIT

D RANGE; 3RD GEAR ABOVE APPROX. 40 km/h (25 mph)

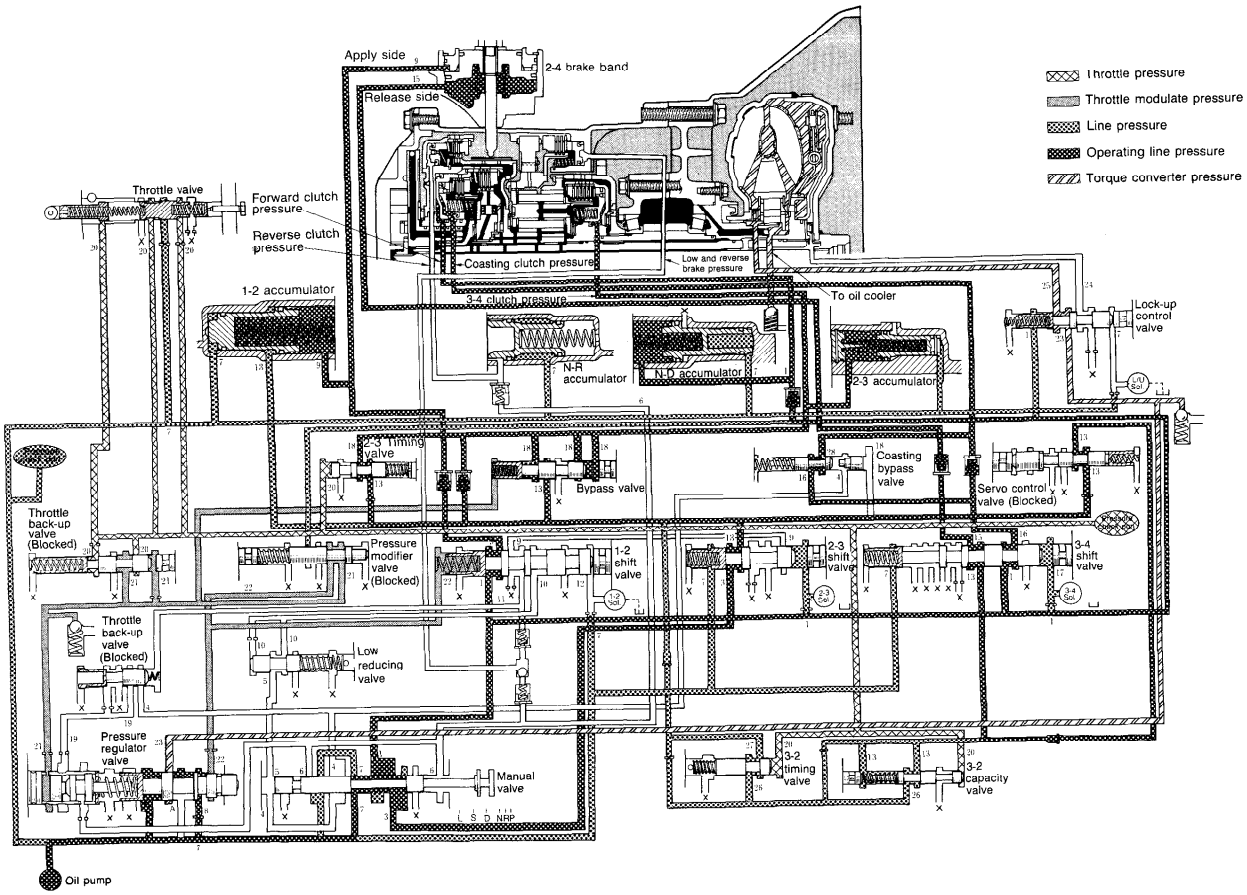

03UOK2-331

Downloaded from www.Manualslib.com manuals search engine

D RANGE; 4TH GEAR LOCKUP ON

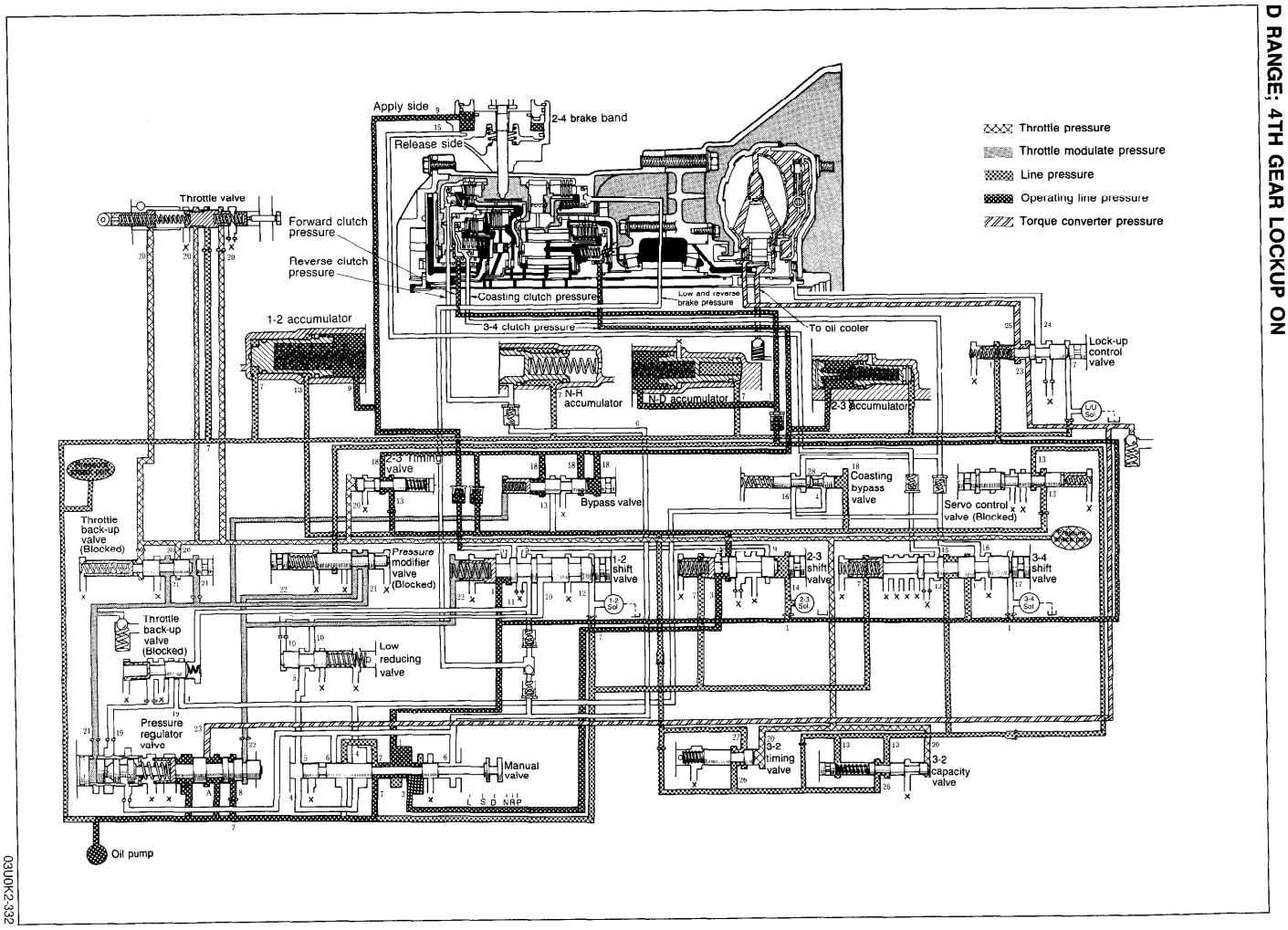

Downloaded from www.Manualslib.com manuals search engine

S RANGE; 1ST GEAR

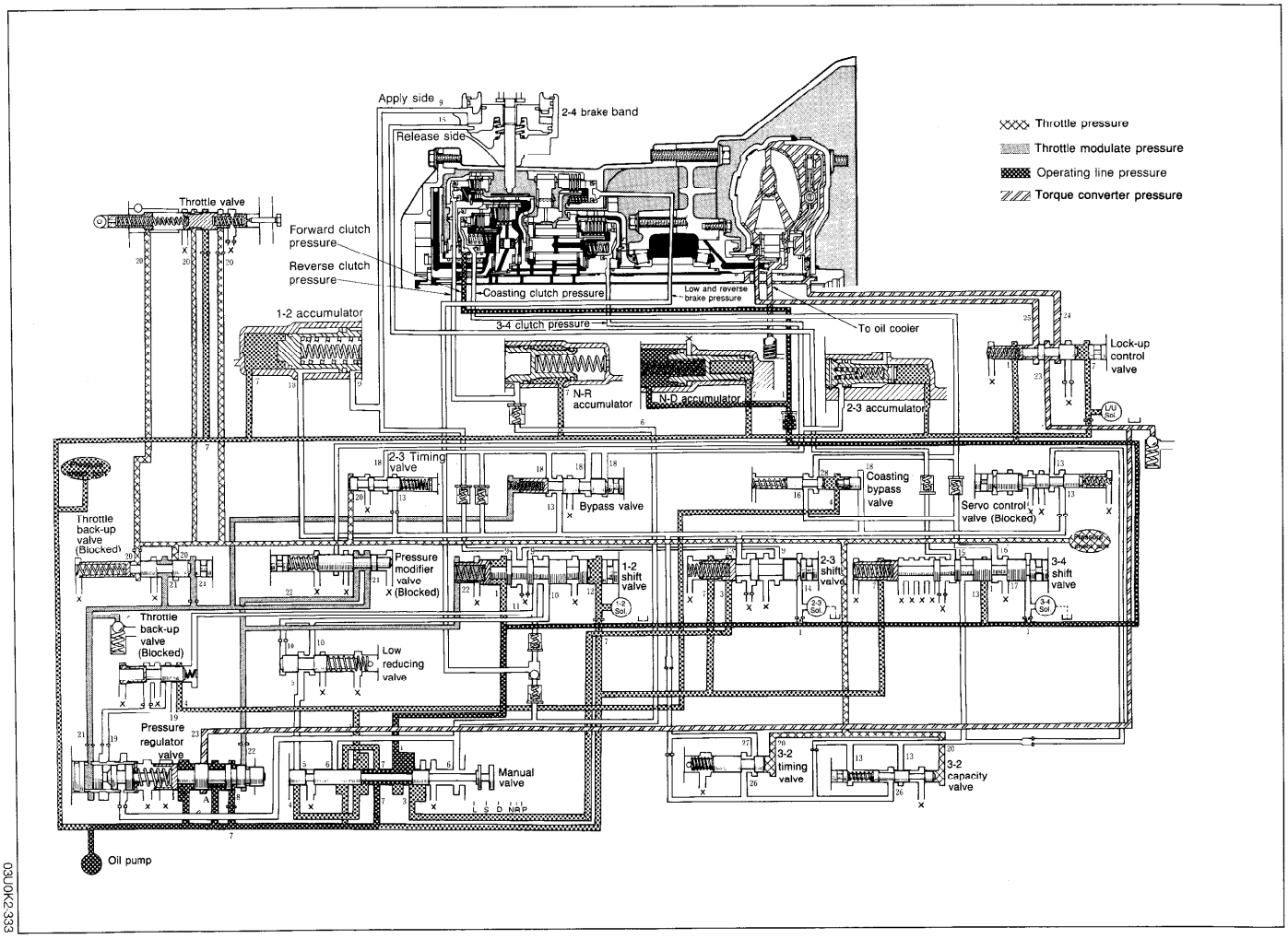

03UOK2-333

Downloaded from www.Manualslib.com manuals search engine

S RANGE; 2ND GEAR

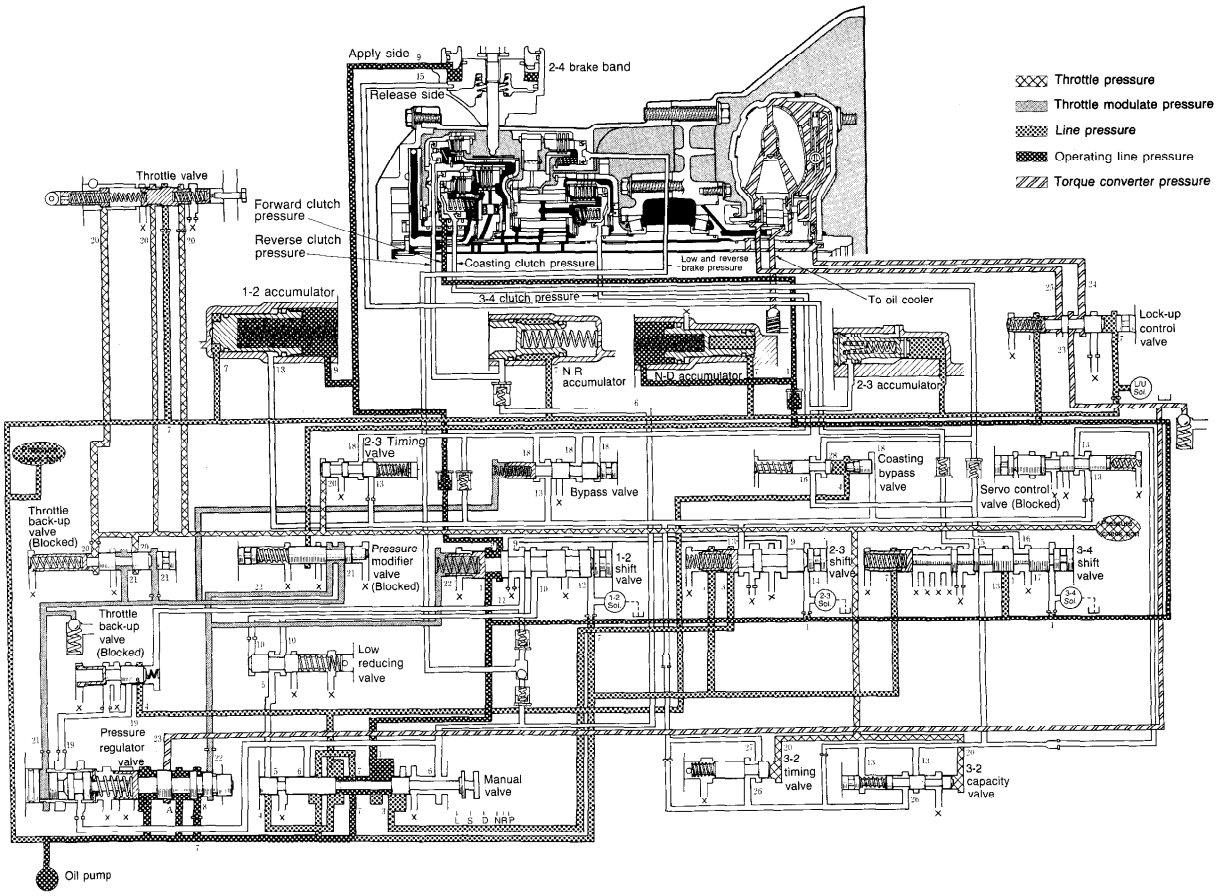

Downloaded from www.Manualslib.com manuals search engine

S RANGE; HOLD 2ND GEAR

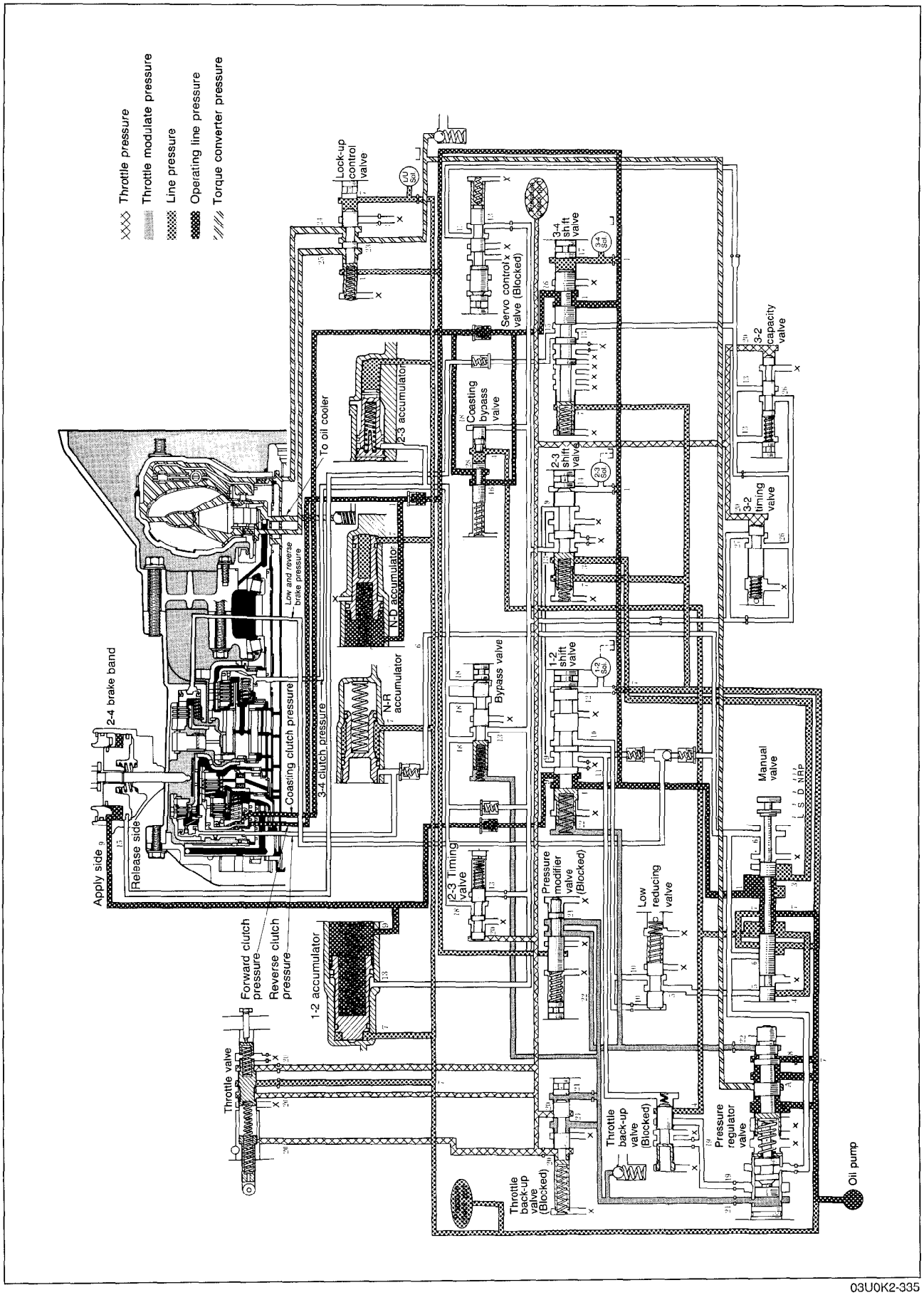

03U0K2-335

Downloaded from www.Manualslib.com manuals search engine

S RANGE; 3RD GEAR BELOW APPROX. 40 km/h (25 mph)

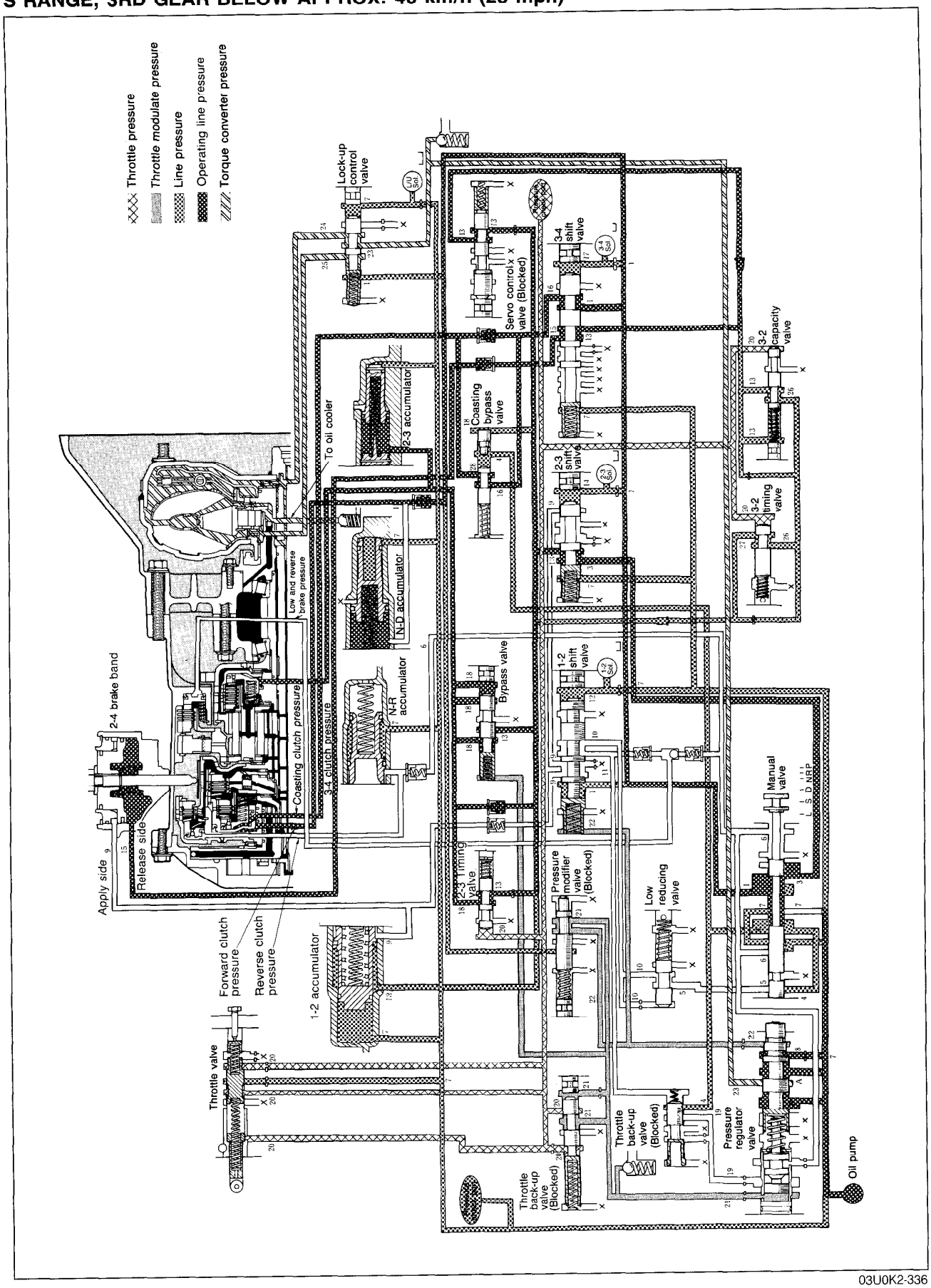

03U0K2-336

Downloaded from www.Manualslib.com manuals search engine

S RANGE; 3RD GEAR ABOVE APPROX. 40 km/h (25 mph)

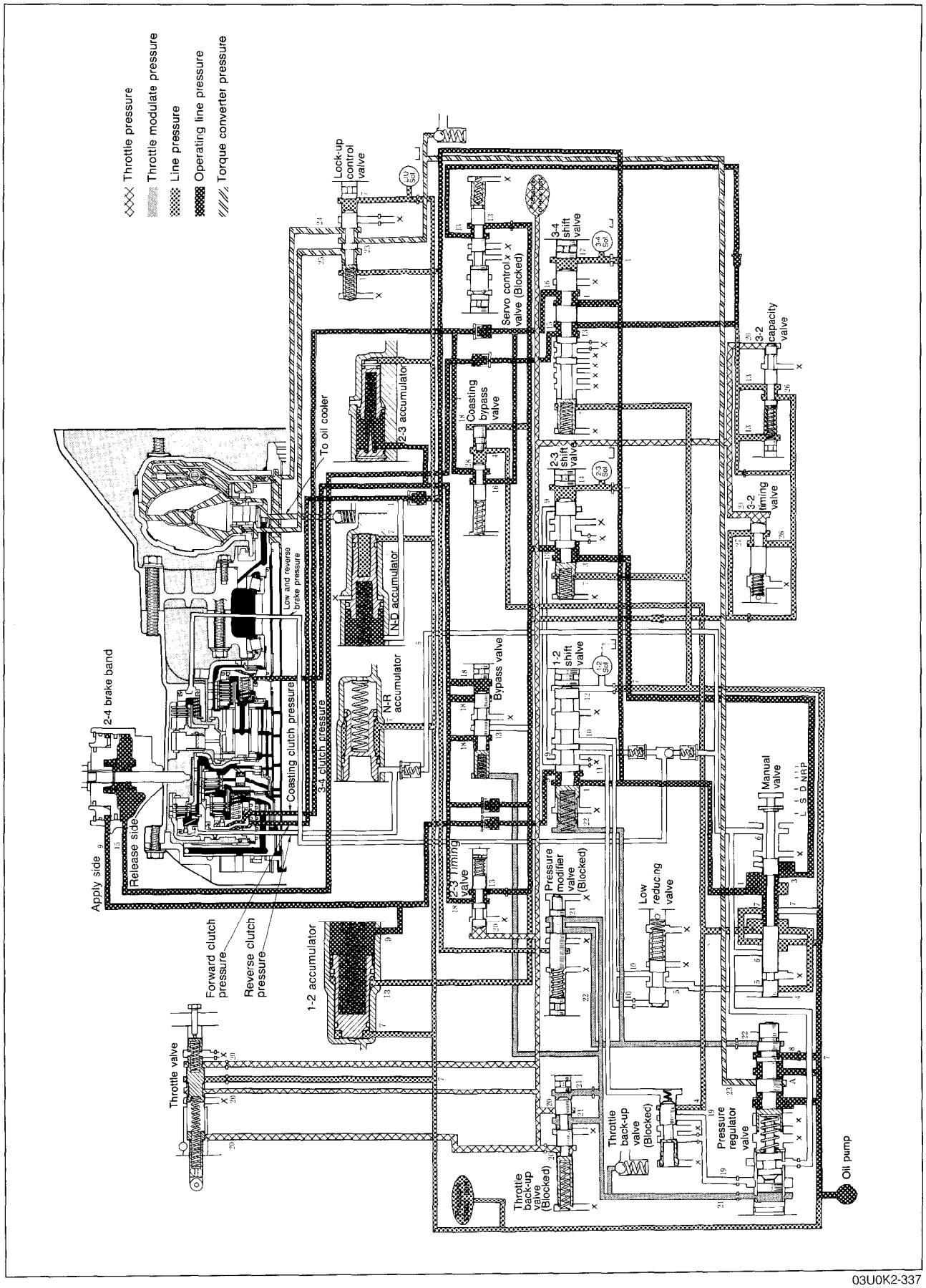

03U0K2-337

Downloaded from www.Manualslib.com manuals search engine

L RANGE; 1ST GEAR

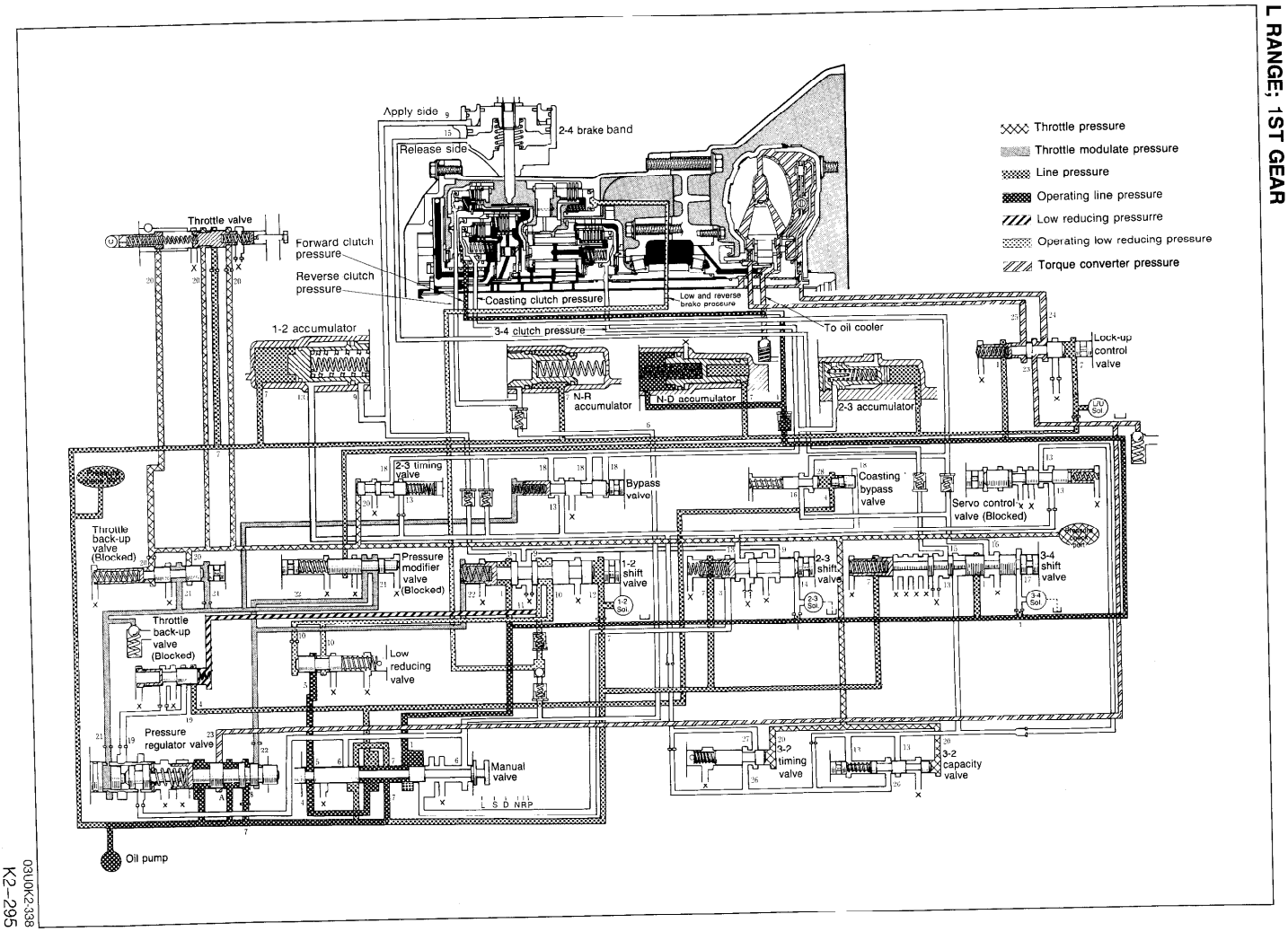

Downloaded from www.Manualslib.com manuals search engine

L RANGE; HOLD 1ST GEAR

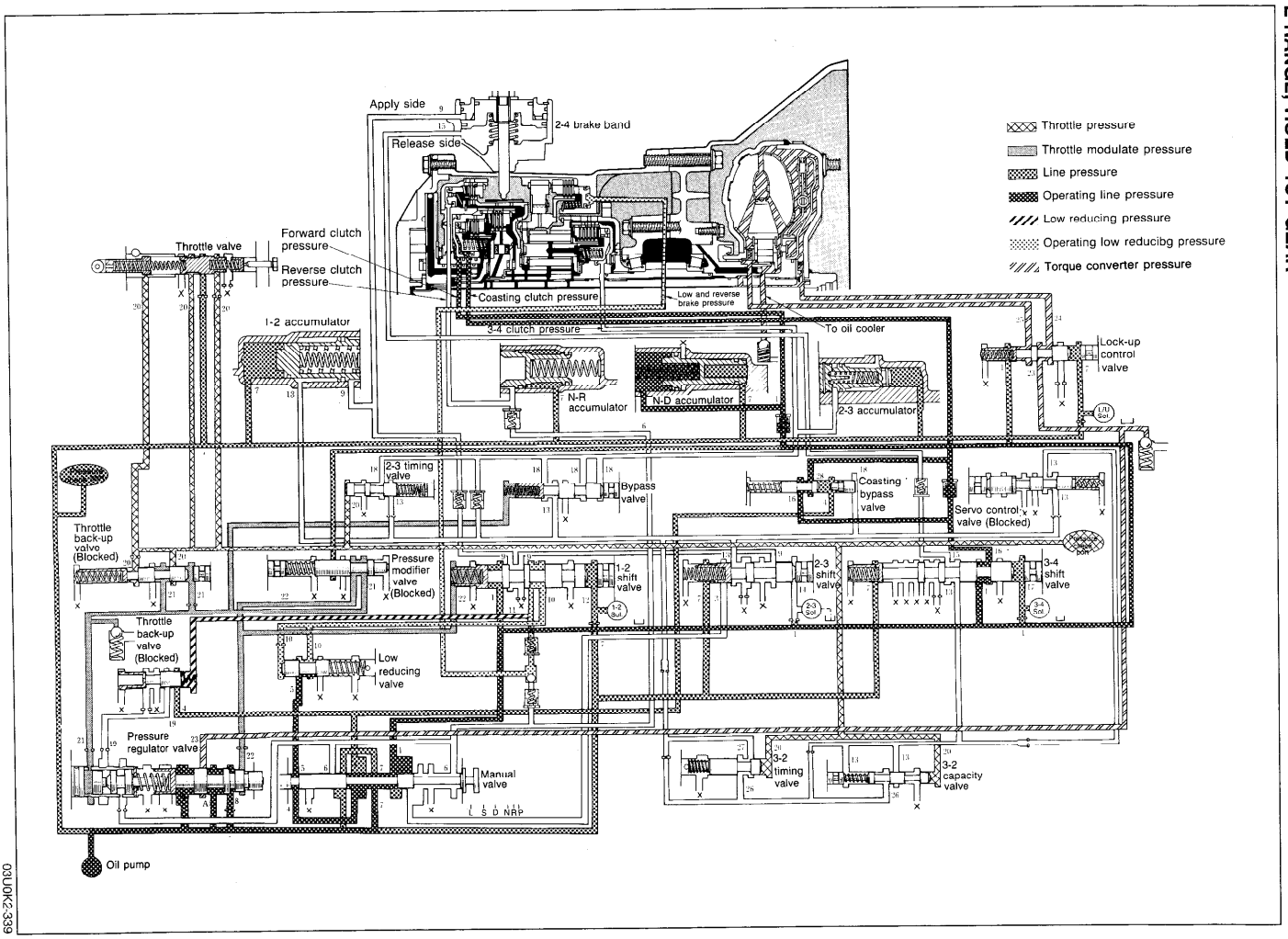

03UOK2-339

Downloaded from www.Manualslib.com manuals search engine

L RANGE; 2ND GEAR BELOW APPROX. 110 km/h (68 mph)

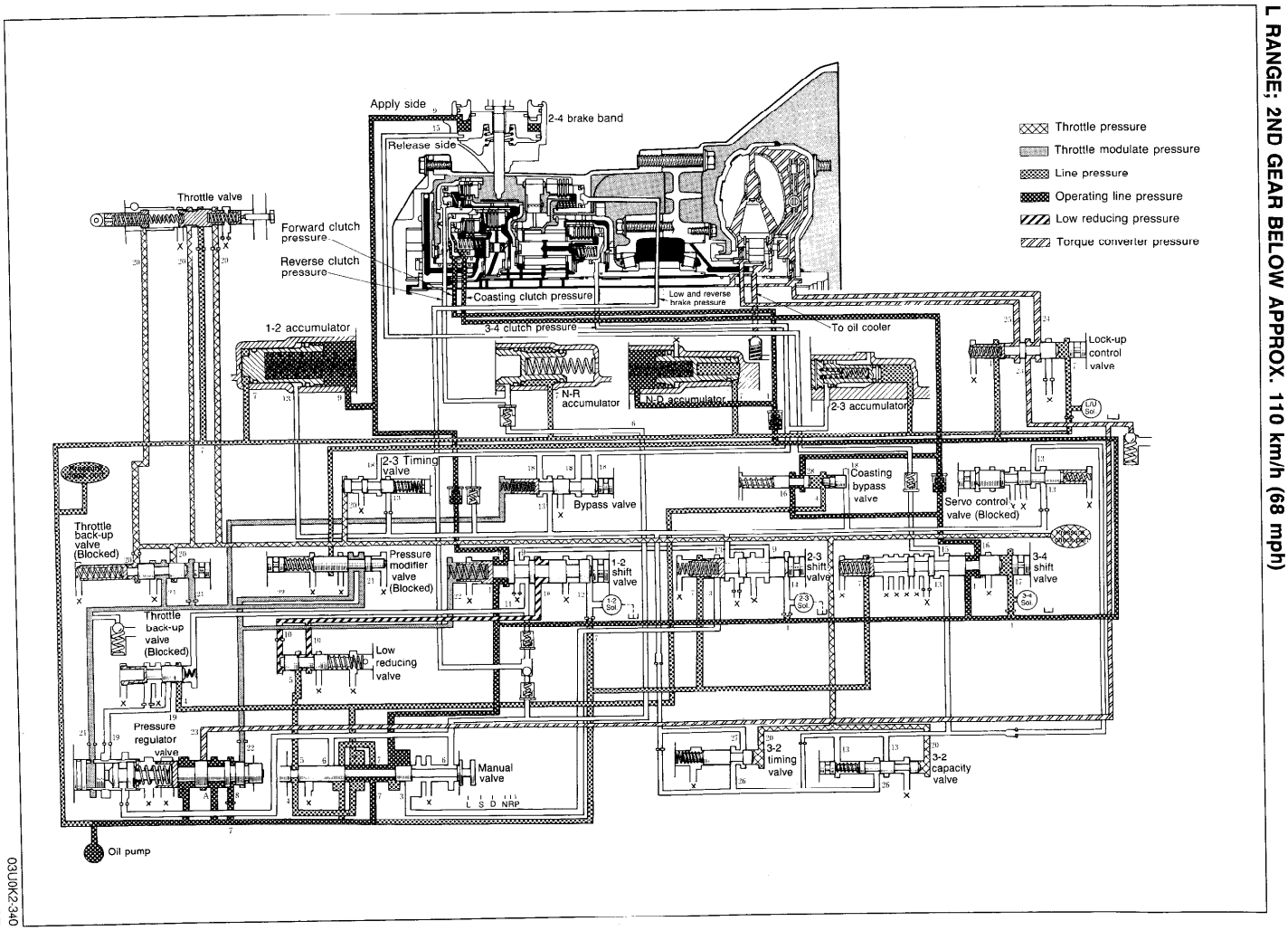

Downloaded from www.Manualslib.com manuals search engine

L RANGE; 2ND GEAR ABOVE APPROX. 110 km/h (68 mph)

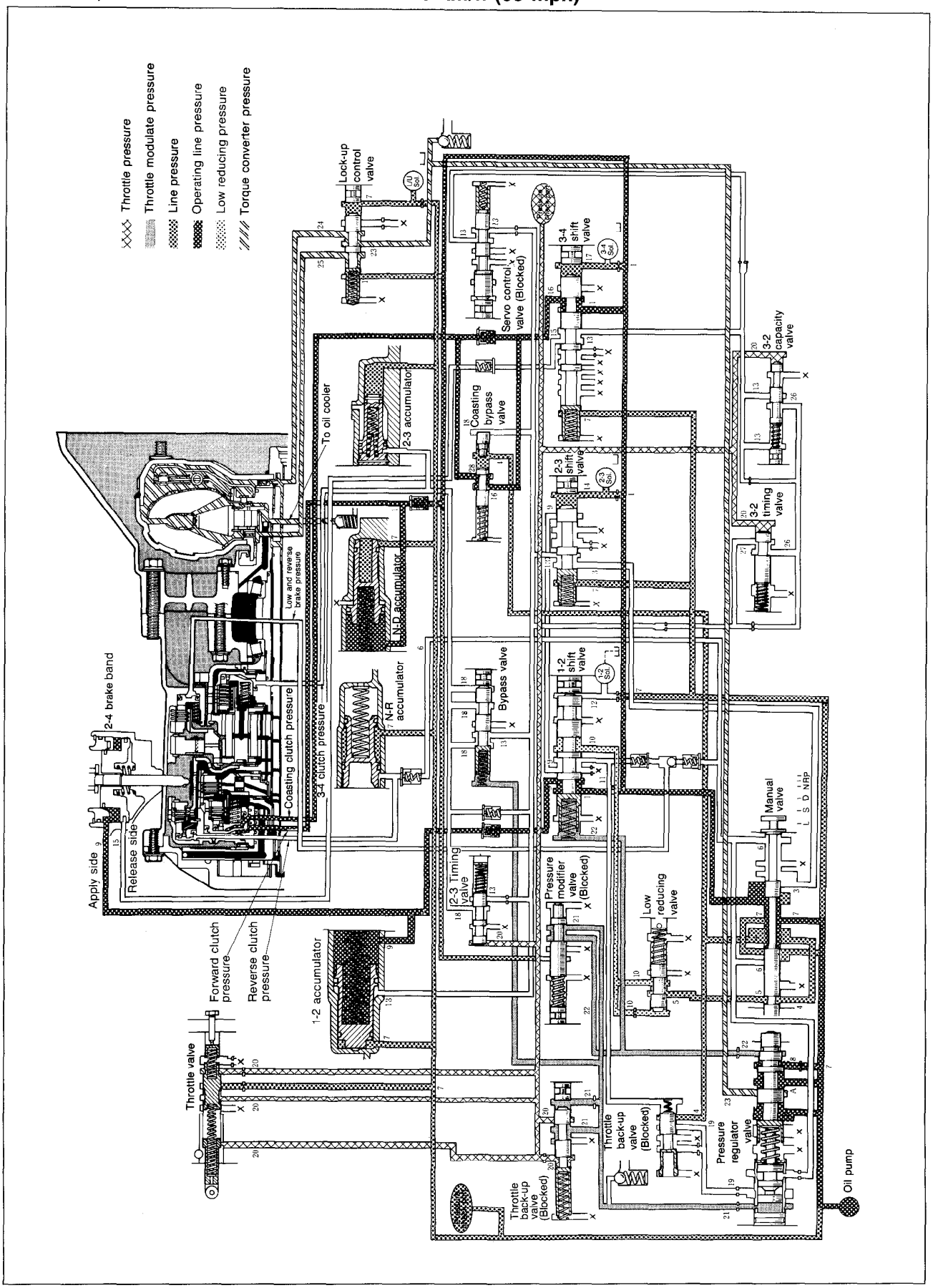

03U0K2-341

Downloaded from www.Manualslib.com manuals search engine

PROPELLER SHAFT

FEATURES

OUTLINE ..... **L– 2**
OUTLINE OF CONSTRUCTION ..... **L– 2**
SPECIFICATIONS ..... **L– 2**
PROPELLER SHAFT ..... **L– 3**

SERVICE

TROUBLESHOOTING GUIDE ..... **L– 4**
PROPELLER SHAFT ..... **L– 4**
PREPARATION ..... **L– 4**
REMOVAL / INSPECTION / INSTALLATION .. **L– 5**
OVERHAUL ..... **L– 7**

03U0LX-801

Downloaded from www.Manualslib.com manuals search engine

OUTLINE

OUTLINE OF CONSTRUCTION

1. The propeller shaft is a three-piece, four-joint type with two center bearings for support.

03U0LX-802

SPECIFICATIONS

Item		Model	MTX	ATX
Length	mm (in)	L_1	834.3 (32.84)	836.5 (32.93)
		L_2	634.0 (24.96)	
		L_3	437.0 (17.20)	
Outer diameter	mm (in)	D_1	75.0 (2.95)	
		D_2	57.0 (2.24)	
		D_3	57.0 (2.24)	

03U0LX-803

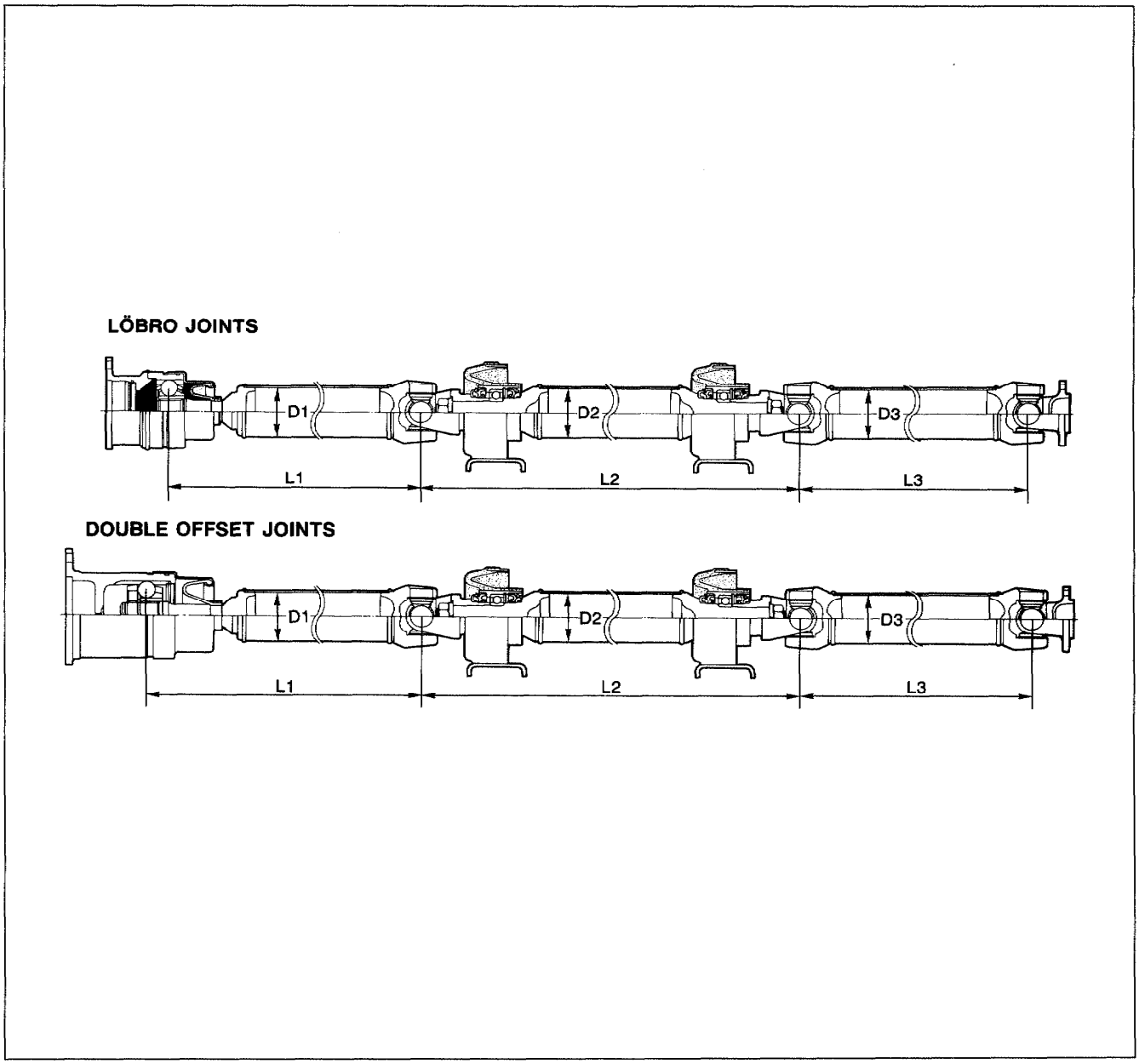

Downloaded from www.Manualslib.com manuals search engine

PROPELLER SHAFT

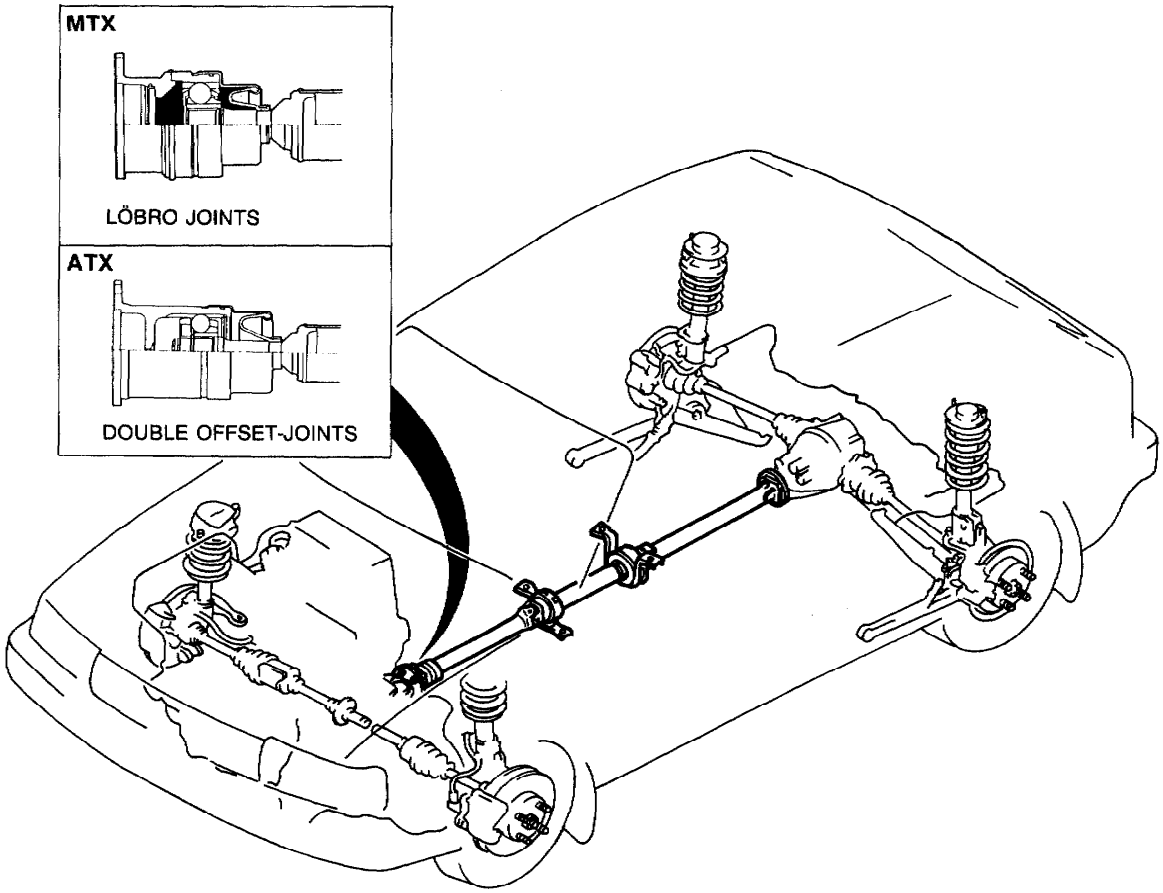

03U0LX-804

A three-piece, four-joint type propeller shaft is used.
By employing two center bearings for support of the propeller shaft assembly, the shaft's flexability is increased, thus reducing the amount of vibration and noise at high speed.
A constant-velocity joint, matched with either the automatic or manual transaxle, is employed at the front of the front propeller shaft for smoother power flow and improved riding comfort.
A Löbro joint is used for the front joint of MTX models for reduction of torque fluctuation, vibration and noise at the high-rpm range.
A double-offset joint, with low thrust resistance, is used for the front joint of ATX models for reduction of idle vibrations.

Downloaded from www.Manualslib.com manuals search engine

TROUBLESHOOTING GUIDE

Problem	Possible cause	Action	Page
Vibration	Bent propeller shaft	Replace	L– 5
	Improperly installed universal joint snap ring	Repair	L– 7
	Worn or damaged center bearing	Replace	L– 7
	Loose center bearing mounting bolts	Tighten	L– 5
	Loose yoke mounting bolts	Tighten	L– 5
	Improperly assembled center bearing yoke	Repair	L– 7
Abnormal noise	Worn or damaged bearing cup	Replace	L– 7
	Improperly installed universal joint snap ring	Repair	L– 7
	Worn or damaged center bearing	Replace	L– 7
	Loose yoke mounting bolts	Tighten	L– 5
	Incorrect propeller shaft alignment angle	Adjust	L– 5

03U0LX-805

PROPELLER SHAFT

PREPARATION
SST

49 0839 425C Puller set, bearing 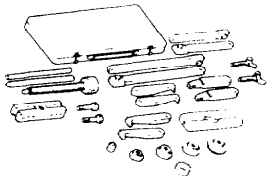	For removal of center companion flange and center bearing	49 0636 145 Puller, fan pulley boss 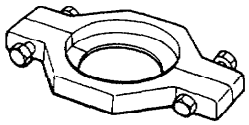	For removal of center bearing support assembly
49 F401 331 Body 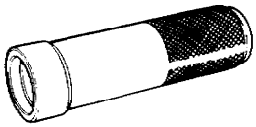	For installation of center bearing support assembly	49 H025 003 Installer, bearing 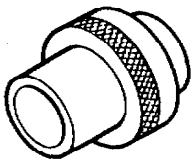	For installation of center bearing support assembly

03U0LX-806

Downloaded from www.Manualslib.com manuals search engine

REMOVAL / INSPECTION / INSTALLATION

1. Remove in the order shown in the figure, referring to **Removal Note**.
2. Inspect all parts and repair or replace as necessary.
3. Install in the reverse order of removal, referring to **Installation Note**.

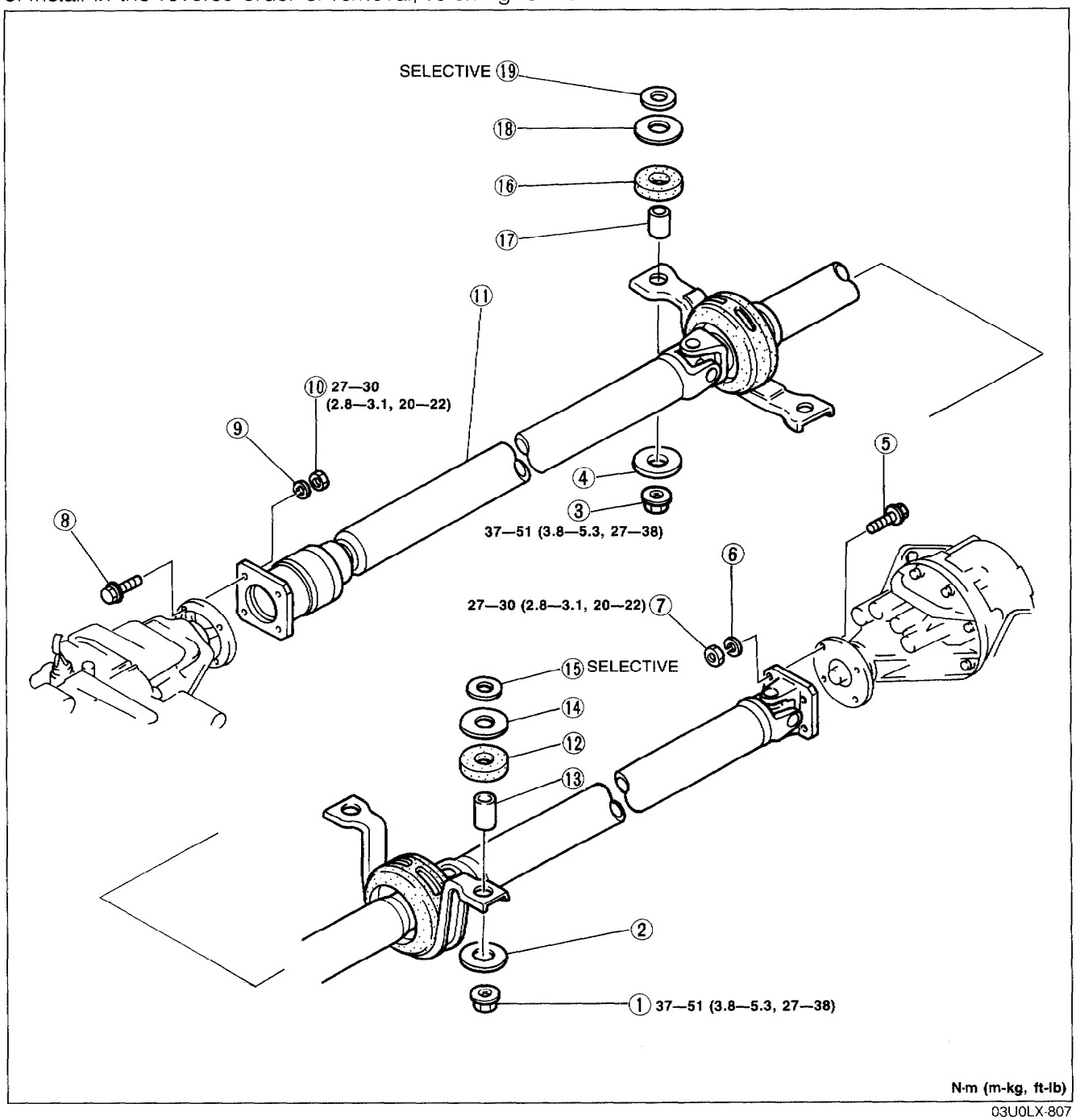

03U0LX-807

1. Nut
   Removal Note .... page L–6
2. Washer
3. Nut
4. Washer
5. Bolt
6. Lock washer
7. Nut
8. Bolt
9. Lock washer
10. Nut
11. Propeller shaft
    Inspection..... page L–9
    Installation Note.. page L–6
12. Bushing
13. Spacer
14. Washer
15. Spacers
    Removal Note .... page L–6
16. Bushing
17. Spacer
18. Washer
19. Spacer

Downloaded from www.Manualslib.com manuals search engine

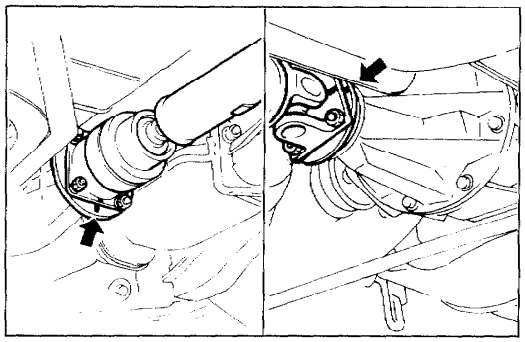

03U0LX-808

Removal Note
Nuts

1. Before removing the propeller shaft, mark the flanges for proper reassembly.

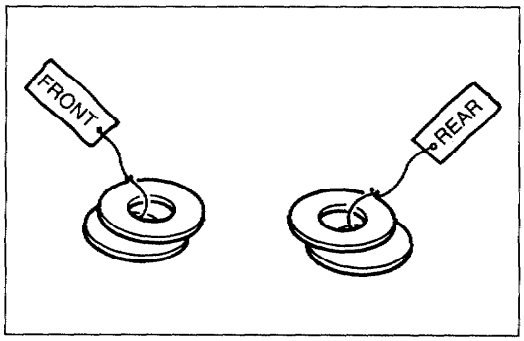

03U0LX-809

Spacers

1. Identify the specers for proper reassembly.

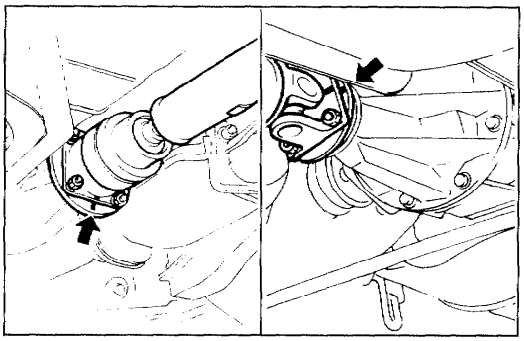

03U0LX-810

Installation Note
Propeller shaft

1. Align the marks and install the propeller shaft.

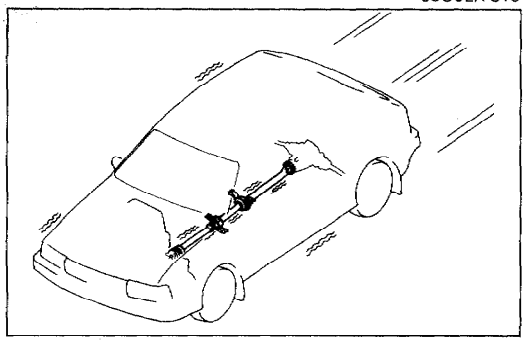

03U0LX-811

2. Verify that there is no abnormal noise or vibration when driving the vehicle.

Note
- **The spacer on each side must be the same size.**

3. If noise or vibration seems to be the result of incorrect propeller shaft alignment angle, substitute different spacer at the center bearing support assembly to eliminate the problem.

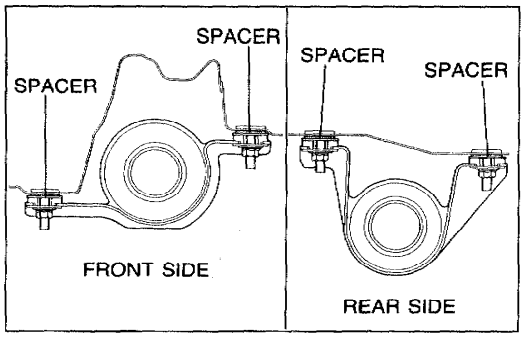

Spacer size mm (in)		
No spacer	1.6 (0.06)	3.2 (0.13)
4.5 (0.18)	6.0 (0.24)	8.0 (0.31)
10.0 (0.39)	13.0 (0.51)	

Downloaded from www.Manualslib.com manuals search engine

OVERHAUL

Caution
- **Use pads in the vise to prevent damaging the part.**

1. Disassemble in the order shown in the figure, referring to **Disassembly Note**.
2. Inspect all parts and repair or replace as necessary.
3. Assemble in the reverse order of disassembly, referring to **Assembly Note**.

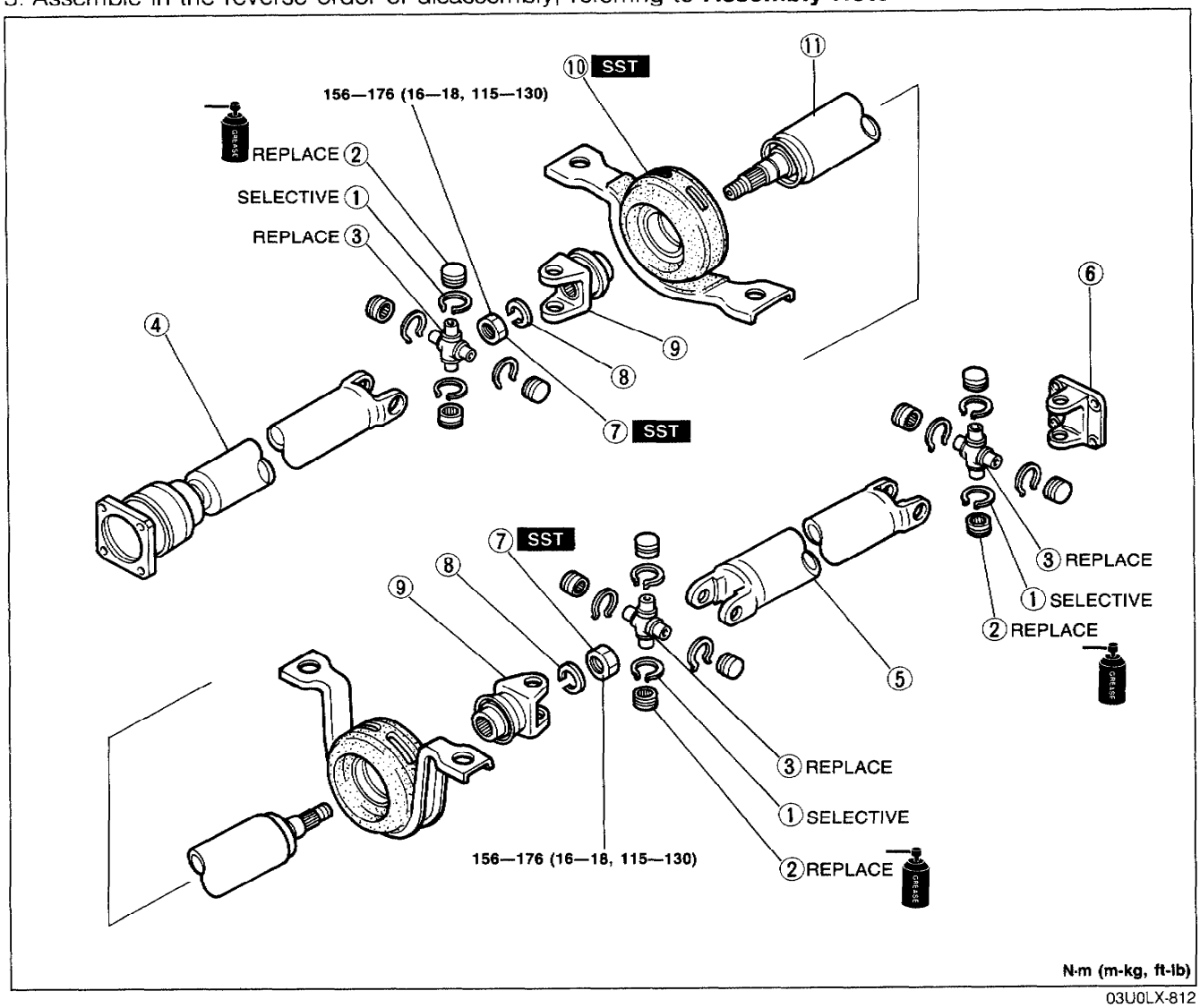

03U0LX-812

1. Snap ring
   Disassembly Note..... page L– 8
   Assembly Note ..... page L–10
2. Bearing cup
   Disassembly Note..... page L– 8
   Inspect for damage, wear and rough rotation
   Assembly Note ..... page L– 9
3. Spider
4. Front propeller shaft
   Inspection ..... page L– 9
5. Rear propeller shaft
   Inspection ..... page L– 9
6. Yoke (Diff side)
7. Nut
   Disassembly Note..... page L– 8
   Assembly Note ..... page L– 9
8. Lock washer
9. Yoke
10. Center bearing support assembly
    Disassembly Note..... page L– 8
    Inspect for damage and rough rotation
    Assembly Note ..... page L– 9
11. Center propeller shaft
    Inspection ..... page L– 9

Downloaded from www.Manualslib.com manuals search engine

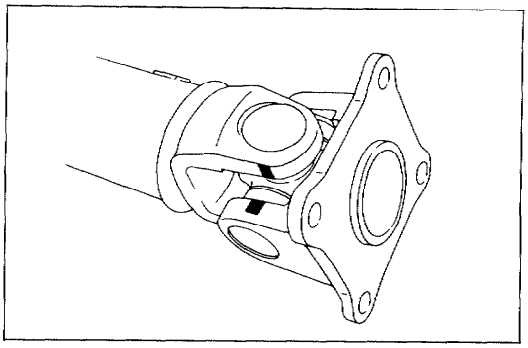

03U0LX-813

Disassembly Note

Snap ring

1. Mark the yoke and propeller shaft for proper reassembly.

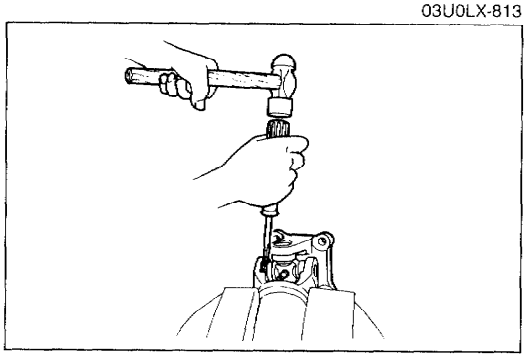

9TG0LX-013

2. Clamp the propeller shaft in a vise.
3. Remove the snap ring.

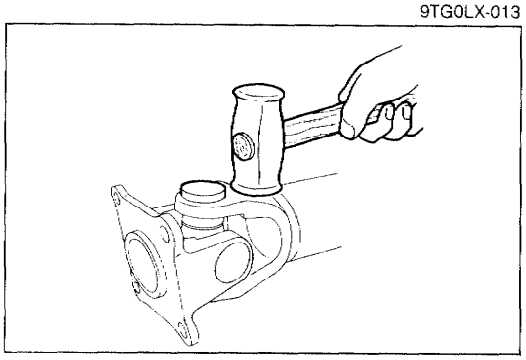

9TG0LX-014

Bearing cup

1. Push one bearing cup out of the propeller shaft by tapping the propeller shaft yoke.
2. Remove the opposite bearing cup in the same manner.
3. Separate the propeller shaft and yoke.
4. Clamp the yoke in a vise.
5. Remove the bearing cups and the spider from the yoke as in Steps 1 and 2.

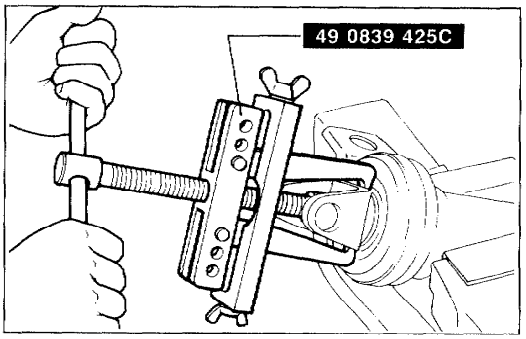

03U0LX-814

Locknut

1. Align the marks on the center propeller shaft and yoke.
2. Remove the nut and lock washer.
3. Remove the yoke with the **SST**.

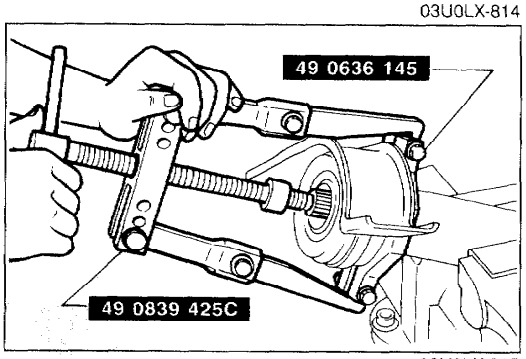

03U0LX-815

Center bearing support assembly

1. Remove the center bearing support assembly with the **SST**.

Downloaded from www.Manualslib.com manuals search engine

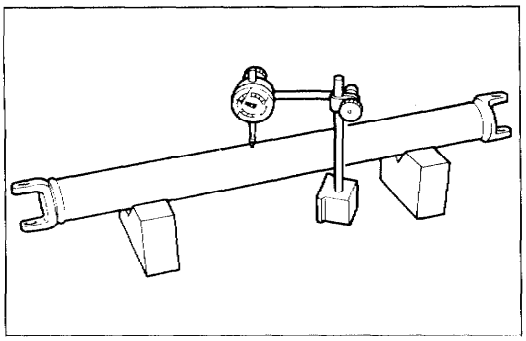

03U0LX-816

Inspection
Center propeller shaft

Caution
- **Replace the center propeller shaft as an assembly if runout is excessive.**

1. Measure the center propeller shaft runout with a dial indicator.

Runout: 0.4mm (0.0157 in) max.

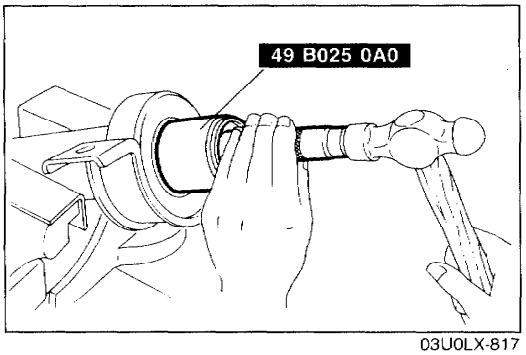

03U0LX-817

Assembly Note
Center bearing support assembly
1. Install the center bearing support assembly with the **SST**.

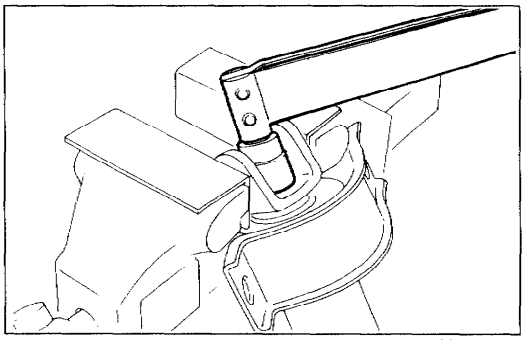

03U0LX-818

Nut
1. Align the marks on the center propeller shaft and yoke.
2. Install the nut.

Tightening torque:
157—177 N·m (16—18 m-kg, 116—130 ft-lb)

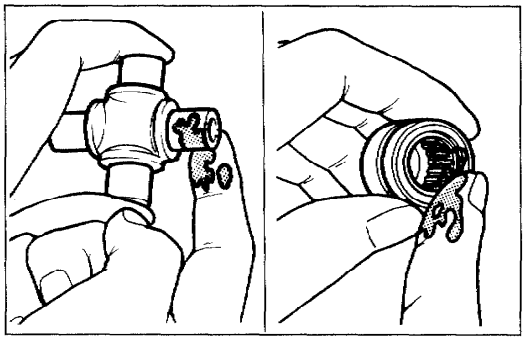

03U0LX-819

Bearing cup

Caution
- **Do not reuse the snap rings, bearing cups, or spider.**

1. Apply lithium based grease to the roller bearings inside the bearing cups.
2. Clamp the yoke in a vise.

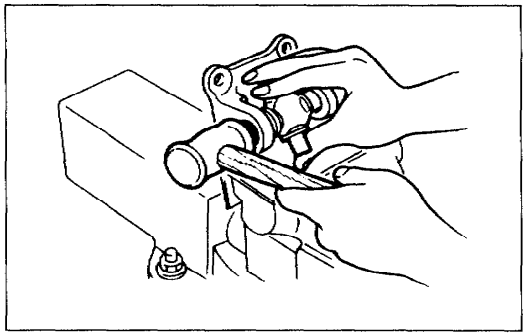

03U0LX-820

3. Set the new spider into the yoke and tap in a bearing cup using the spider to hold the rollers.
4. Slide the yoke to the opposite side and install the other bearing cup.

Downloaded from www.Manualslib.com manuals search engine

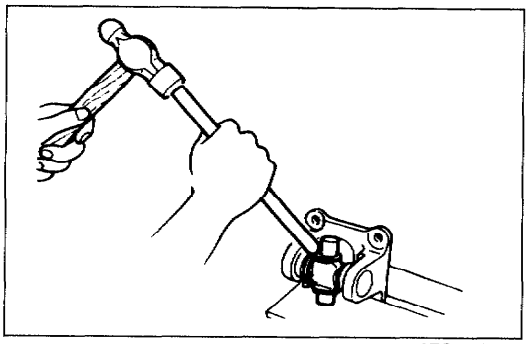

9TG0LX-024

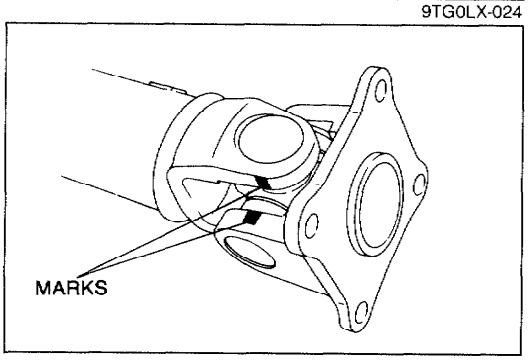

03U0LX-821

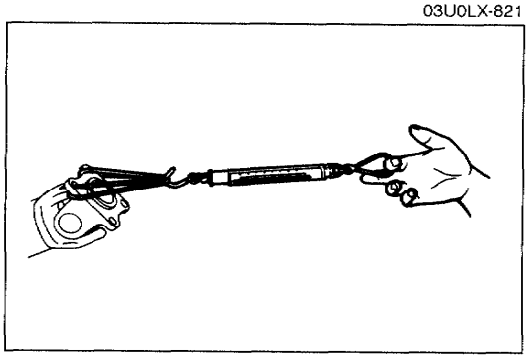

03U0LX-822

Snap ring

Caution
- **Use only new snap rings and ones of the same thickness.**

1. Install the thinnest snap rings.

Caution
- **Align the marks on the propeller shaft and yoke.**

2. Install the yoke to the propeller shaft.
3. Lightly tap the yoke and propeller shaft flanges with a plastic hammer to seat the cups.

4. Measure the starting torque of the spider.

Starting torque:
0.29—0.98 N·m (3—10 cm-kg, 2.60—8.68 in-lb)

5. Install different snap rings to adjust the starting torque if necessary.

Snap ring thicknesses (19 types)

mm (in)

1.21 (0.0476)	1.22 (0.0480)
1.23 (0.0484)	1.24 (0.0488)
1.25 (0.0492)	1.26 (0.0496)
1.27 (0.0500)	1.28 (0.0504)
1.29 (0.0508)	1.30 (0.0512)
1.31 (0.0516)	1.32 (0.0520)
1.33 (0.0524)	1.34 (0.0528)
1.35 (0.0531)	1.36 (0.0535)
1.37 (0.0539)	1.38 (0.0543)
1.39 (0.0547)	

Downloaded from www.Manualslib.com manuals search engine

FRONT AND REAR AXLES

INDEX ..... **M– 2**

FEATURES

OUTLINE ..... **M– 3**
OUTLINE OF CONSTRUCTION ..... **M– 3**
SPECIFICATIONS ..... **M– 3**
REAR AXLE AND DIFFERENTIAL ..... **M– 4**
REAR AXLE ..... **M– 4**

SERVICE

SUPPLEMENTAL SERVICE INFORMATION .. **M– 5**
TROUBLESHOOTING GUIDE ..... **M– 5**
REAR AXLE ..... **M– 5**
DIFFERENTIAL (STANDARD) ..... **M– 5**
REAR AXLE ..... **M– 6**
PREPARATION ..... **M– 6**
DISC BRAKE TYPE ..... **M– 7**
REAR DRIVESHAFT **M–12**
DOUBLE-OFFSET JOINT **M–12**
REAR DIFFERENTIAL **M–16**
PREPARATION **M–16**
DIFFERENTIAL OIL **M–17**
OIL SEAL (OUTPUT SHAFT) **M–18**
REAR DIFFERENTIAL **M–20**

03U0MX-801

Downloaded from www.Manualslib.com manuals search engine

INDEX

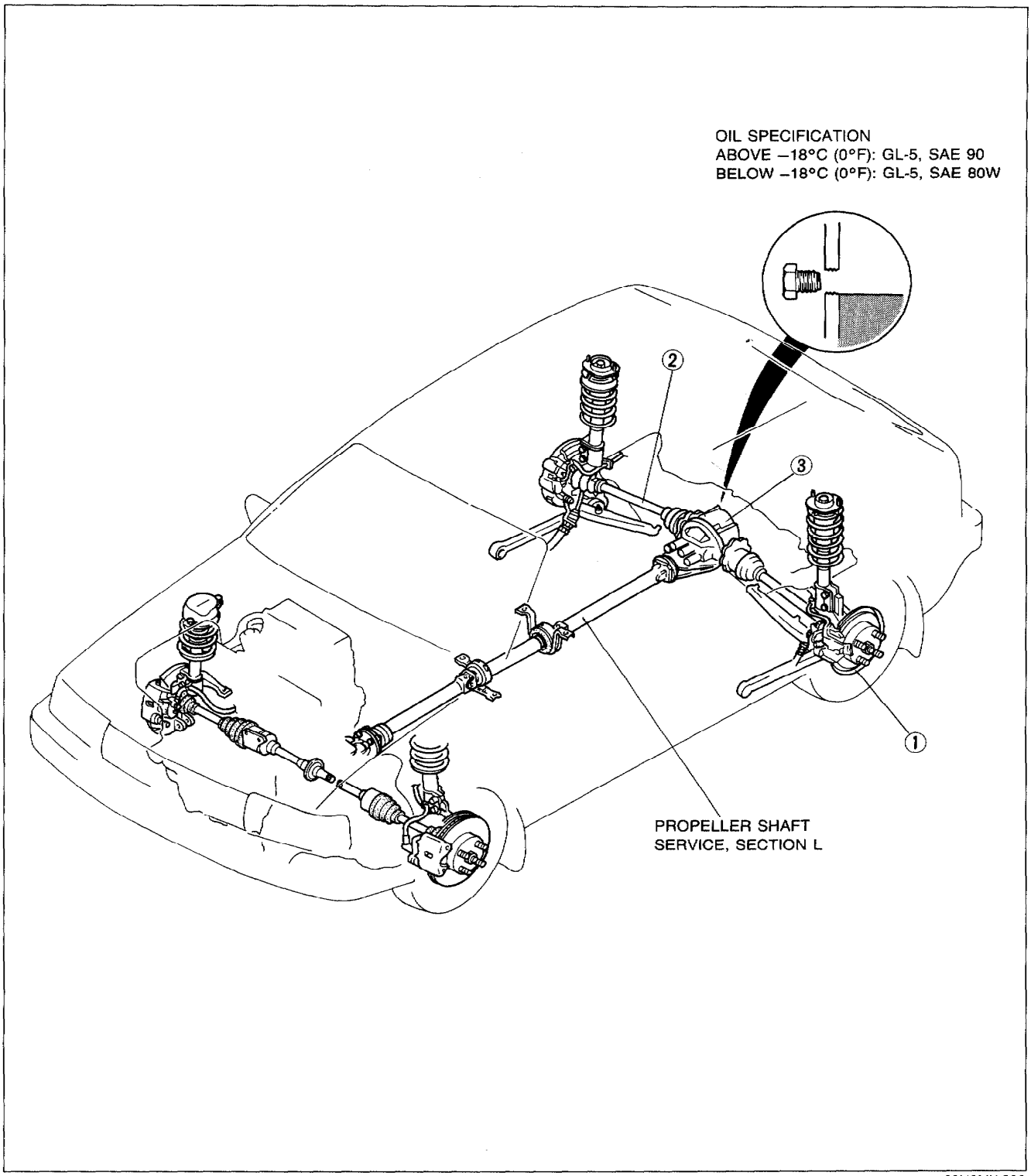

03U0MX-802

1. Rear axle
Removal / Inspection / Installation ..... M– 7
Disassembly / Inspection / Assembly... M– 8
2. Rear driveshaft
Inspection / Removal / Installation M–12
Disassembly / Inspection / Assembly... M–13
3. Rear differential
Differential oil..... M–17
Oil seal (Output shaft) M–18
Removal / Installation..... M–20
Overhaul..... M–22

Downloaded from www.Manualslib.com manuals search engine

OUTLINE

OUTLINE OF CONSTRUCTION

1. Constant-velocity joints, which feature low rotational fluctuation and low noise, and show excellent vibration resistance, are used for the driveshafts.
2. Joint shafts are used for all models, and, because of the resultant equal lengths of the left and right driveshafts, torque-steer during sudden acceleration from a stop is reduced.
3. The rear differential is a standard non-limited-slip differential.
4. Angular type ball bearings are employed for the rear wheel bearings for improved durability and serviceability.

03U0MX-803

SPECIFICATIONS

Item \ Model			BP SOHC	
			MTX	ATX
Rear axle				
Wheel bearing axial play	Maximum	mm (in)	0.05 (0.002)	
Rear differential				
Reduction gear			Hypoid gear	
Differential gear			Straight bevel gear	
Reduction ratio			3.909	
Number of teeth	Ring gear		43	
	Drive pinion gear		11	
Differential oil	Grade		API Service GL-5	
	Viscosity	Above −18°C (0°F)	SAE 90	
		Below −18°C (0°F)	80W	
	Amount	liter (US qt, Imp qt)	0.65 (0.69, 0.57)	
Rear driveshaft				
Joint type	Inside		Double-offset joint	
	Outside		Bell joint	
Length of joint	Right	mm (in)	689 (27.12)	
	Left	mm (in)	659 (25.94)	
Shaft diameter		mm (in)	21 (0.82)	

03U0MX-804

Downloaded from www.Manualslib.com manuals search engine

REAR AXLE AND DIFFERENTIAL

REAR AXLE
Wheel Bearings

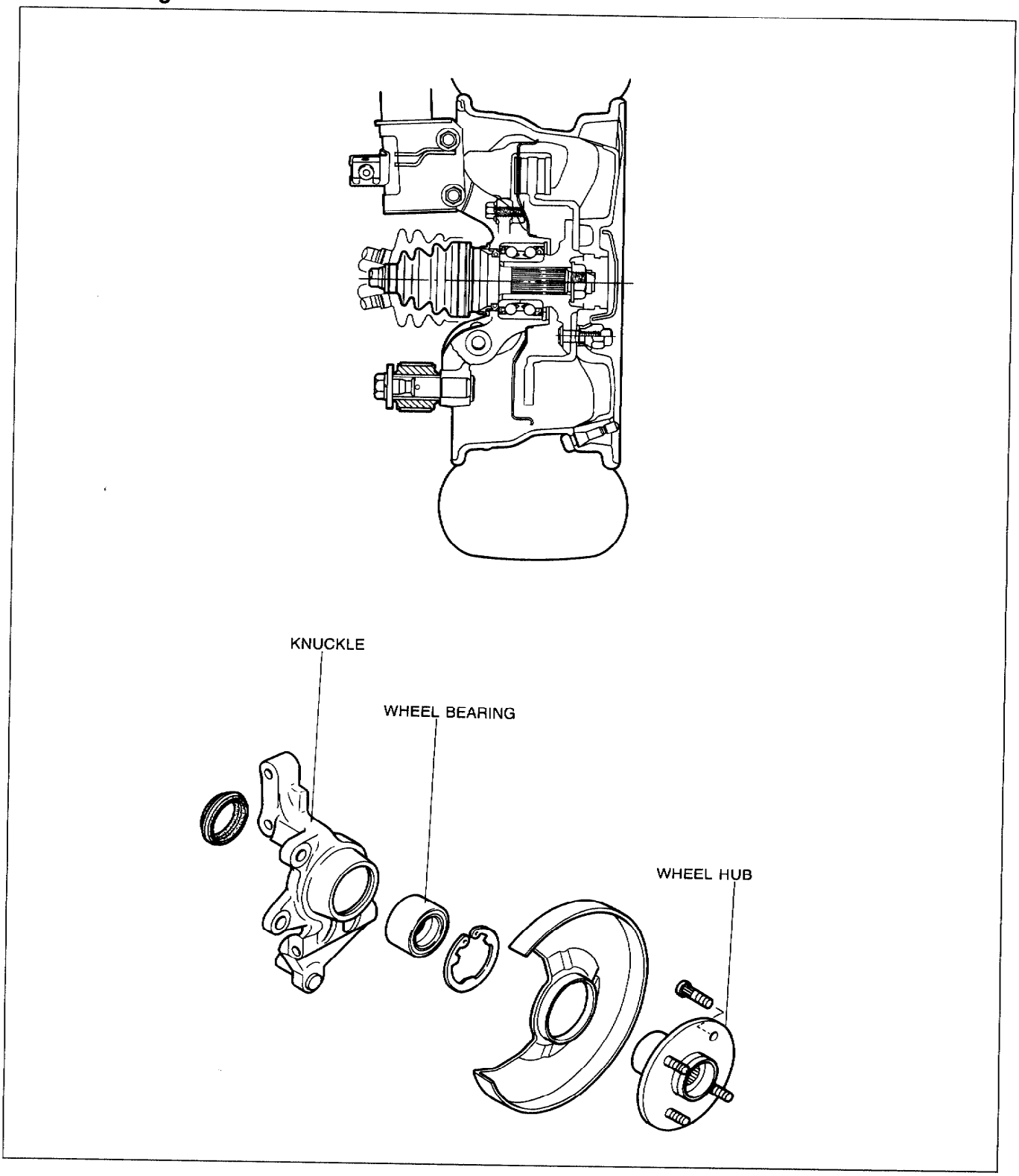

03U0MX-805

Angular type ball bearings, for which the bearing preload is set by tightening the driveshaft nut to the specified torque, are employed for the wheel bearings, thus improving durability and serviceability.

Downloaded from www.Manualslib.com manuals search engine

SUPPLEMENTAL SERVICE INFORMATION

The following points in this section are changed in comparison with Workshop Manual (1195-10-89E).

Troubleshooting guide
- Rear axle
- Rear differential

Rear axle
- Removal / Inspection / Installation
- Disassembly / Assembly

Rear driveshaft
- Inspection / Removal / Installation
- Disassembly / Inspection / Assembly

Rear differential
- Removal / Installation
- Overhaul

Differential oil
- Inspection
- Replacement

03U0MX-806

TROUBLESHOOTING GUIDE

REAR AXLE

Problem	Possible Cause	Action	Page
Abnormal noise	Bent bearing housing	Replace	—
	Bent driveshaft	Replace	M–12
	Worn or damaged wheel bearing	Replace	M– 8
	Worn driveshaft spline	Replace	M–13

03U0MX-807

DIFFERENTIAL (STANDARD)

Problem	Possible Cause	Action	Page
Abnormal noise	Insufficient differential oil	Add oil	M–17
	Incorrect differential oil	Replace	M–17
	Improperly adjusted ring gear backlash	Adjust	M–29
	Poor contact of ring gear teeth	Adjust	M–29
	Worn or damaged side bearing	Replace	M–22
	Worn or damaged ring gear	Replace	M–22
	Worn or damaged drive pinion bearing	Replace	M–22
	Worn or damaged pinion and side gear	Replace	M–22
	Seized side gear and case	Replace	M–22
	Worn side gear spline	Replace	M–22
	Worn pinion shaft	Replace	M–22
	Loose companion flange nut	Tighten	M–28
	Worn thrust washer	Replace	M–28
	Improperly adjusted side gear preload	Adjust	M–28
	Improperly adjusted drive pinion gear preload	Adjust	M–27
Heat buildup	Insufficient differential oil	Add oil	M–17
	Insufficient gear backlash	Adjust	M–28
	Excessive bearing preload	Adjust	M–28
Oil leakage	Excessive differential oil	Remove oil	M–17
	Loose differential carrier	Tighten or repair	M–31
	Worn or damaged oil seal	Replace	M–18
No differential operation	Misassembled	Repair	M–22

03U0MX-808

Downloaded from www.Manualslib.com manuals search engine

REAR AXLE

PREPARATION
SST

49 G030 370 Plate, removing	For removal of wheel hub and wheel bearing	49 G030 727 Attachment A (Part of 49 B026 1A0)	For removal of wheel hub
49 G033 102 Handle (Part of 49 B026 1A0)	For removal of wheel hub	49 G030 797 Handle (Part of 49 G030 795)	For removal of wheel hub
49 F027 005 Attachment 62 (Part of 49 F027 0A1)	For removal of wheel bearing	49 F027 007 Attachment 72 (Part of 49 F027 0A1)	For installation of wheel bearing
49 F027 009 Attachment 68 & 77 (Part of 49 F027 0A1)	For installation of wheel bearing	49 V001 795 Installer, oil seal	For installation of oil seal
49 F027 0A1 Installer set, bearing	For installation of wheel bearing	49 B026 1A0 Puller, wheel hub	For removal of wheel hub
49 G030 795 Installer, oil seal	For installation of wheel bearing		

03U0MX-809

Downloaded from www.Manualslib.com manuals search engine

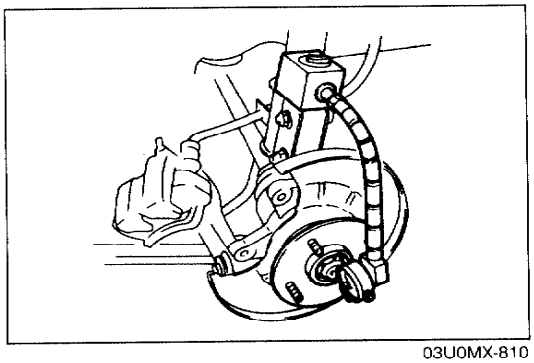

03U0MX-810

DISC BRAKE TYPE

Preinspection

Wheel bearing play

1. Remove the wheel and tire.
2. Remove the brake caliper assembly.
3. Position a dial indicator against the wheel hub. Push and pull the wheel hub by hand in the axial direction and measure the wheel bearing play.
4. If the bearing play exceeds specification, check and adjust the wheel hub nut torque or replace the wheel bearing if necessary.

Maximum wheel bearing play: 0.05mm (0.002 in)

Removal / Inspection / Installation

1. Remove in the order shown in the figure, referring to **Removal Note**.
2. Inspect all parts and repair or replace as necessary.
3. Install in the reverse order of removal, referring to **Installation Note**.

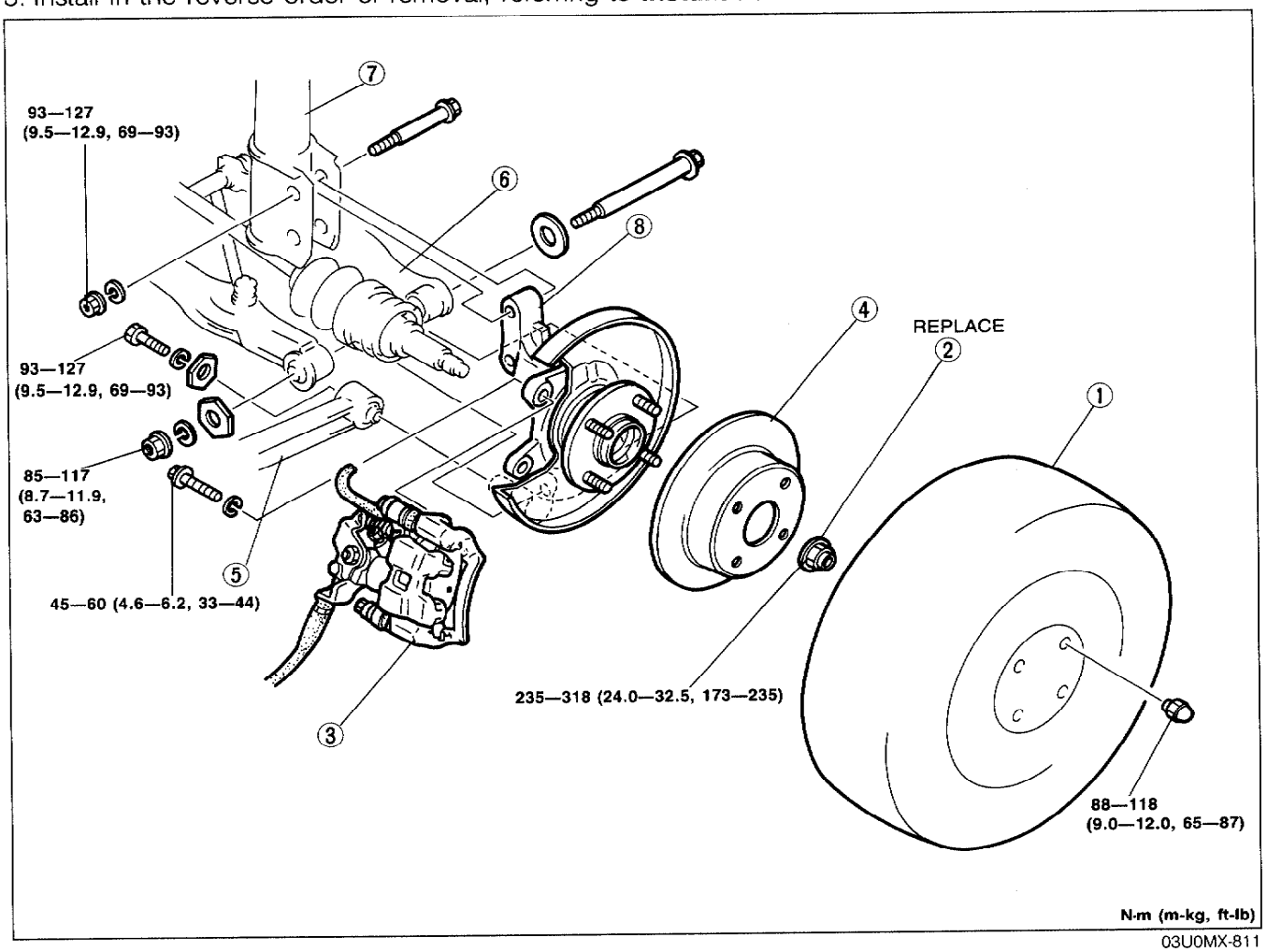

03U0MX-811

1. Wheel and tire
2. Wheel hub nut
   Installation Note ..... page M–8
3. Brake caliper assembly
   Service ..... Section P
4. Disc plate
   Service ..... Section P
5. Trailing link
6. Lateral link
7. Shock absorber
8. Wheel hub, knuckle
   Disassembly / Inspection / Assembly ..... page M–8

Downloaded from www.Manualslib.com manuals search engine

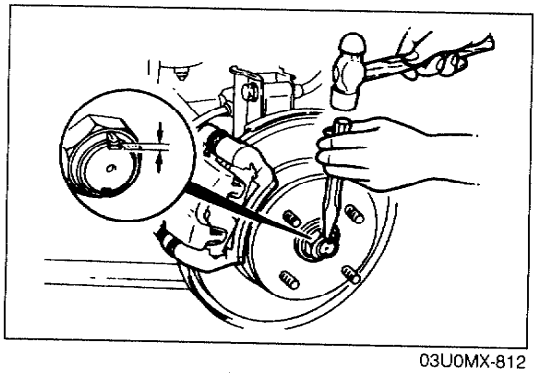

03U0MX-812

Installation Note
Wheel hub nut
1. Install a new nut, and stake it as shown.

Tightening torque:
177—235 N·m (18—24 m-kg, 130—174 ft-lb)

Disassembly / Inspection / Assembly
1. Disassemble in the order shown in the figure, referring to **Disassembly Note**.
2. Inspect all parts and repair or replace as necessary.
3. Assemble in the reverse order of disassembly, referring to **Assembly Note**.

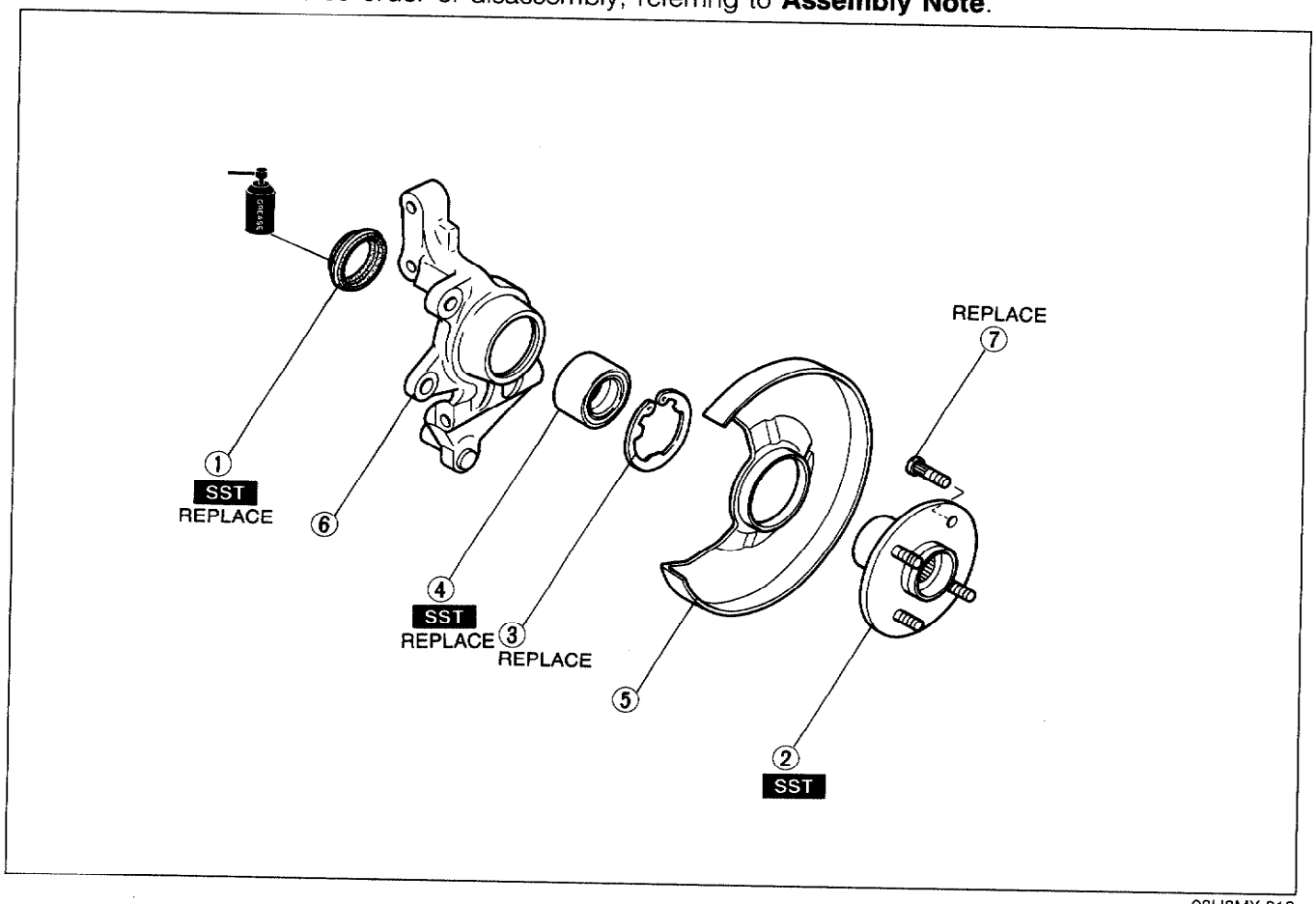

03U0MX-813

1. Oil seal
   Disassembly Note
   ..... page M– 9
   Assembly Note page M–11
2. Wheel hub
   Disassembly Note
   ..... page M– 9
   Inspect for cracks and other damage
   Assembly Note page M–11
3. Retaining ring
4. Wheel bearing
   Disassembly Note
   ..... page M– 9
   Assembly Note page M–10
5. Dust cover
   Disassembly Note
   ..... page M–10
   Inspect for damage and distortion
   Assembly Note page M–10
6. Knuckle
   Inspect for cracks and other damage
7. Wheel stud
   Disassembly Note
   ..... page M–10
   Assembly Note page M–10

Downloaded from www.Manualslib.com manuals search engine

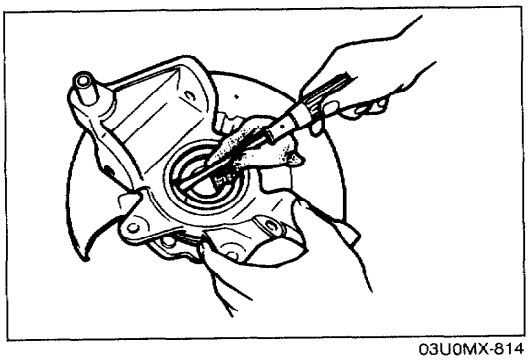

03U0MX-814

Disassembly Note
Oil seal
1. Remove the oil seal with a screwdriver.

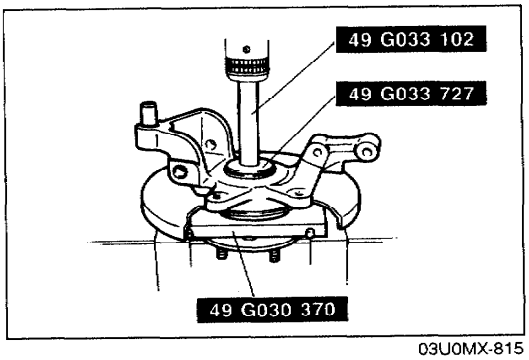

03U0MX-815

Wheel hub
1. Remove the wheel hub from the knuckle with the **SST** and a press.

Caution
- **Support the wheel hub by hand to prevent it from falling.**

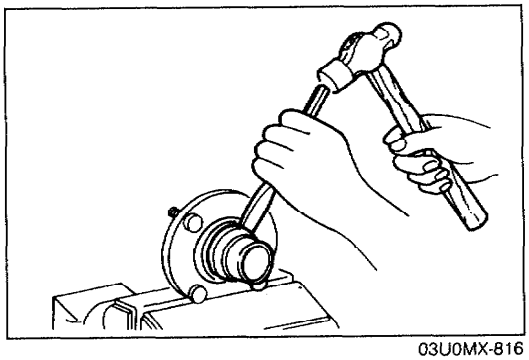

03U0MX-816

2. Move the inner bearing race away from the axle with a hammer and chisel.

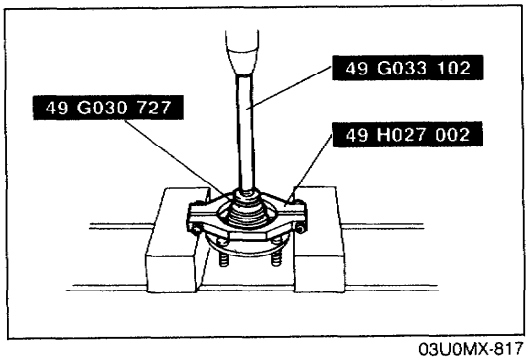

03U0MX-817

3. Set the **SST** between the wheel hub and bearing inner race, and remove the bearing inner race.

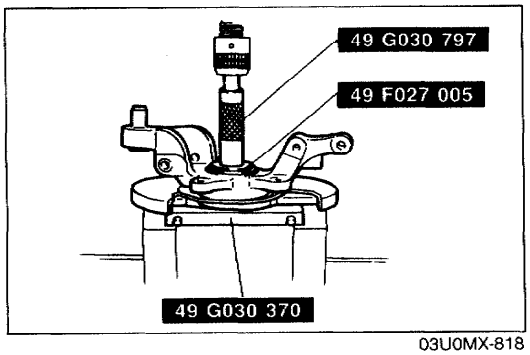

03U0MX-818

Wheel bearing

Caution
- **Do not reuse the removed wheel bearing.**

1. Remove the wheel bearing from the knuckle with the **SST** and a press.

Downloaded from www.Manualslib.com manuals search engine

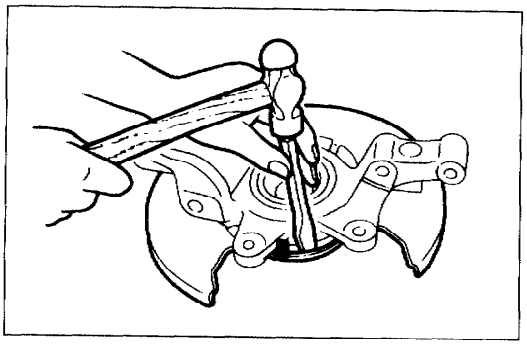

03U0MX-819

Dust cover

Caution
- **Do not remove the dust cover if not necessary.**
- **Do not reuse the removed dust cover.**

1. Mark the dust cover and knuckle for proper reassembly.
2. Remove the dust cover with a chisel.

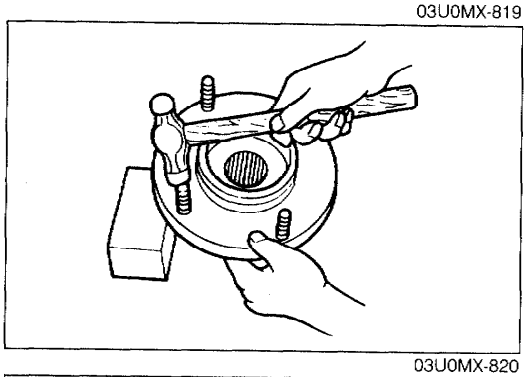

03U0MX-820

Wheel studs

Caution
- **Do not remove the wheel studs unless necessary.**
- **Do not reuse the removed wheel.**

1. Remove the wheel studs with a press.

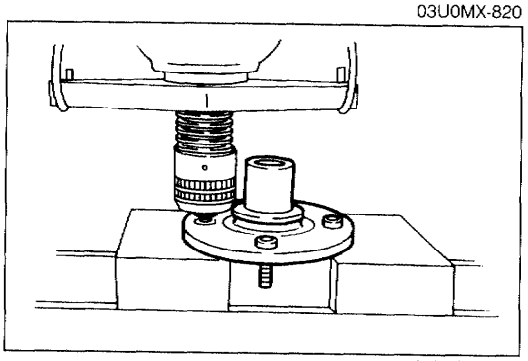

03U0MX-821

Assembly Note
Wheel stud
1. Install the new wheel studs with a press.

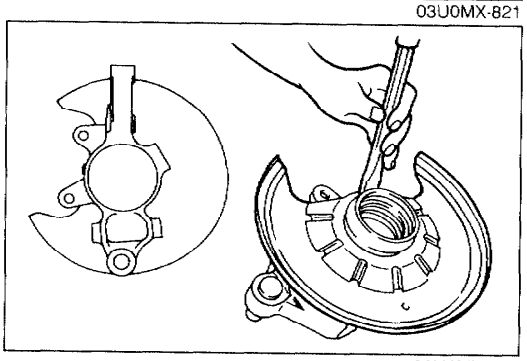

03U0MX-822

Dust cover
1. Mark the new dust cover the same as the one removed.
2. Align the marks of the new dust cover and the knuckle.

Caution
- **Install the new dust cover as shown.**

3. Install the new dust cover.

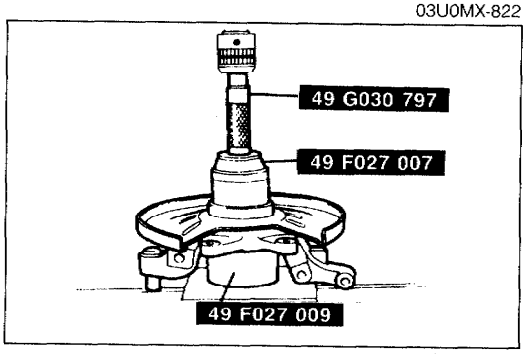

03U0MX-823

Wheel bearing
1. Press the new wheel bearing in with the **SST**.

Downloaded from www.Manualslib.com manuals search engine

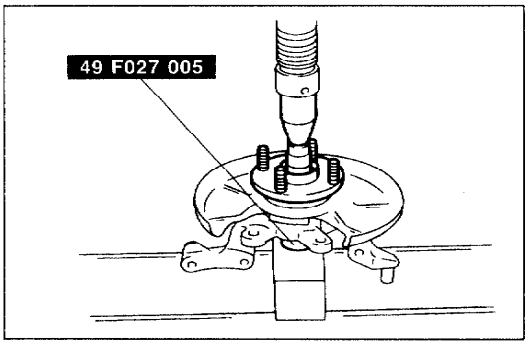

03U0MX-824

Wheel hub

1. Press the wheel hub in with the **SST**.

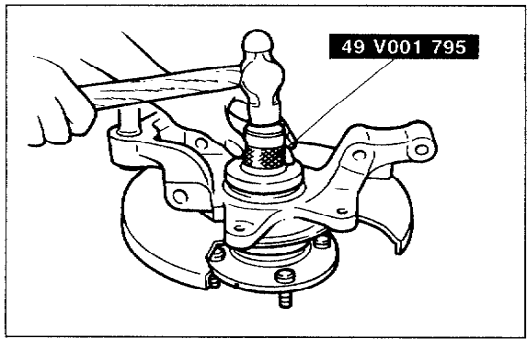

03U0MX-014

Oil seal

Caution

- **Use a new oil seal, and apply grease to the lip of the seal.**
- **Install the oil seal flush with the knuckle.**

1. Install the new oil seal with the **SST**.

Downloaded from www.Manualslib.com manuals search engine

REAR DRIVESHAFT

DOUBLE-OFFSET JOINT

Inspection / Removal / Installation

1. Inspection the rear driveshaft, referring to **Inspection**.
2. Remove in the order shown in the figure, referring to **Removal Note**.
3. Install in the reverse order of removal, referring to **Installation Note**.

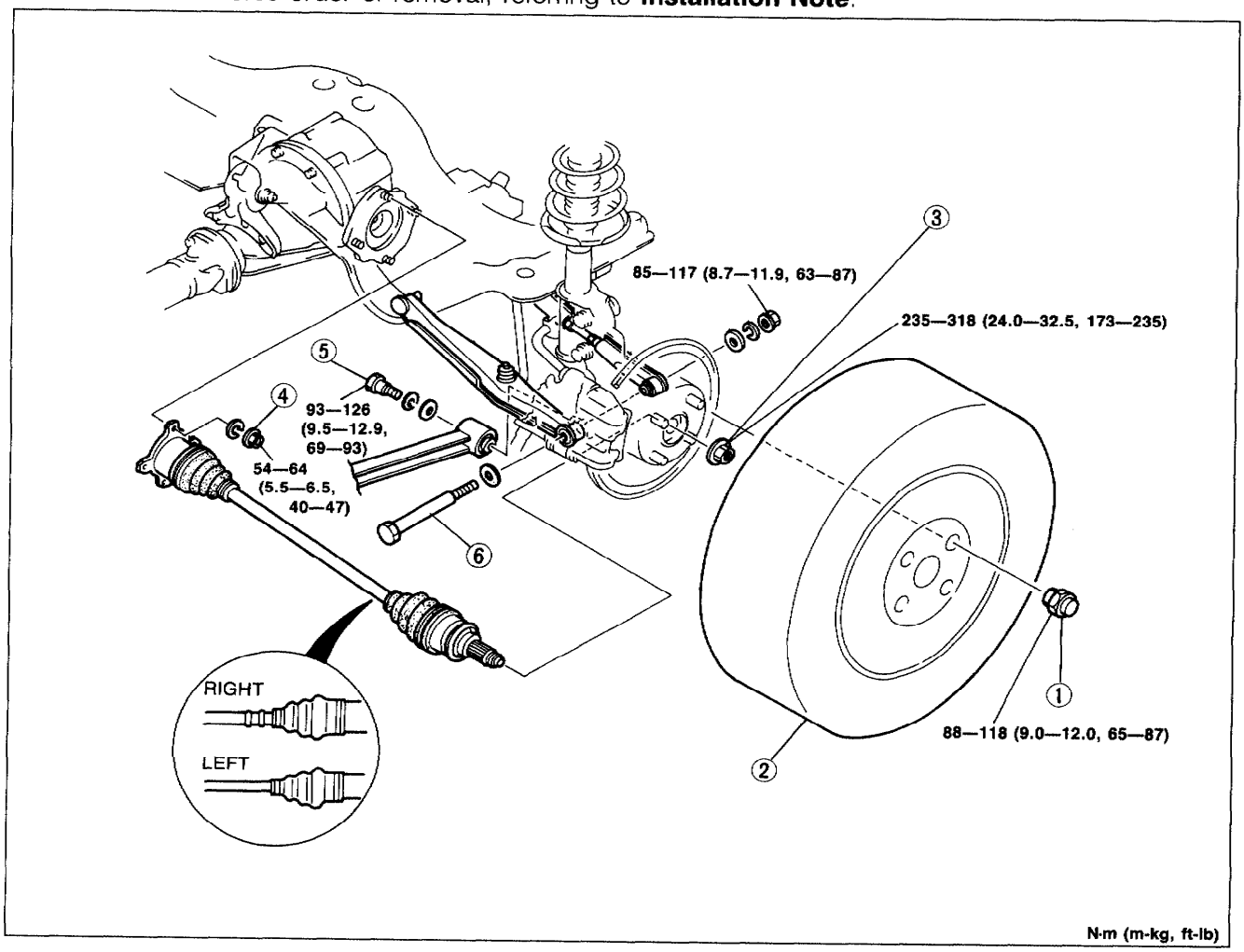

03U0MX-826

1. Wheel nuts
2. Wheel and tire
3. Wheel hub nut
4. Nut (Driveshaft)
   Removal Note ..... page M–13
5. Bolt (Trailing link)
6. Bolt (Lateral link)
7. Rear driveshaft
   Disassembly / Inspection / Assembly ..... page M–13

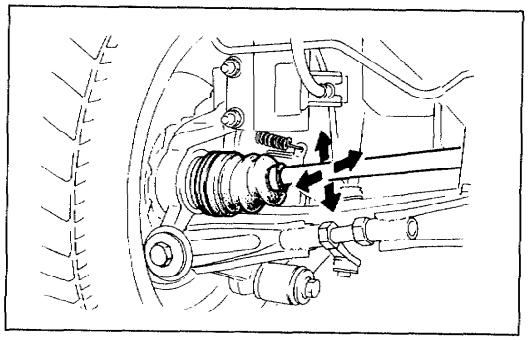

03U0MX-827

Inspection

Driveshaft

1. Check the dust boot on the driveshaft for cracks, damage, leaking grease, and loose boot bands.
2. Check the driveshaft for bending, cracking, and wear of joints or splines.
   Replace the driveshaft if necessary.

Downloaded from www.Manualslib.com manuals search engine

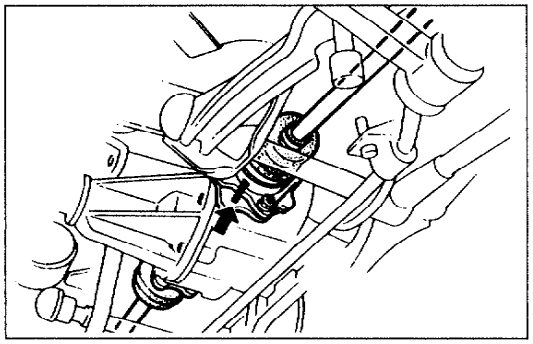

03U0MX-828

Removal Note
Nuts (Driveshaft)
1. Before removing the driveshaft, mark the driveshaft and output shaft for proper reassembly.

Disassembly / Inspection / Assembly
1. Disassemble in the order shown in the figure, referring to **Disassembly Note**.
2. Inspect all parts and repair or replace as necessary.
3 Assemble in the reverse order of removal, referring to **Assembly Note**.

Caution
- **Secure the driveshaft in a vise with protective material (such as copper plates) on the vise jaws.**
- **Be careful that dust or other foreign material does not enter the ball joint while the work is being performed.**
- **Do not disassemble the wheel side ball joint.**
- **Do not wash the ball joint unless it is being disassembled.**

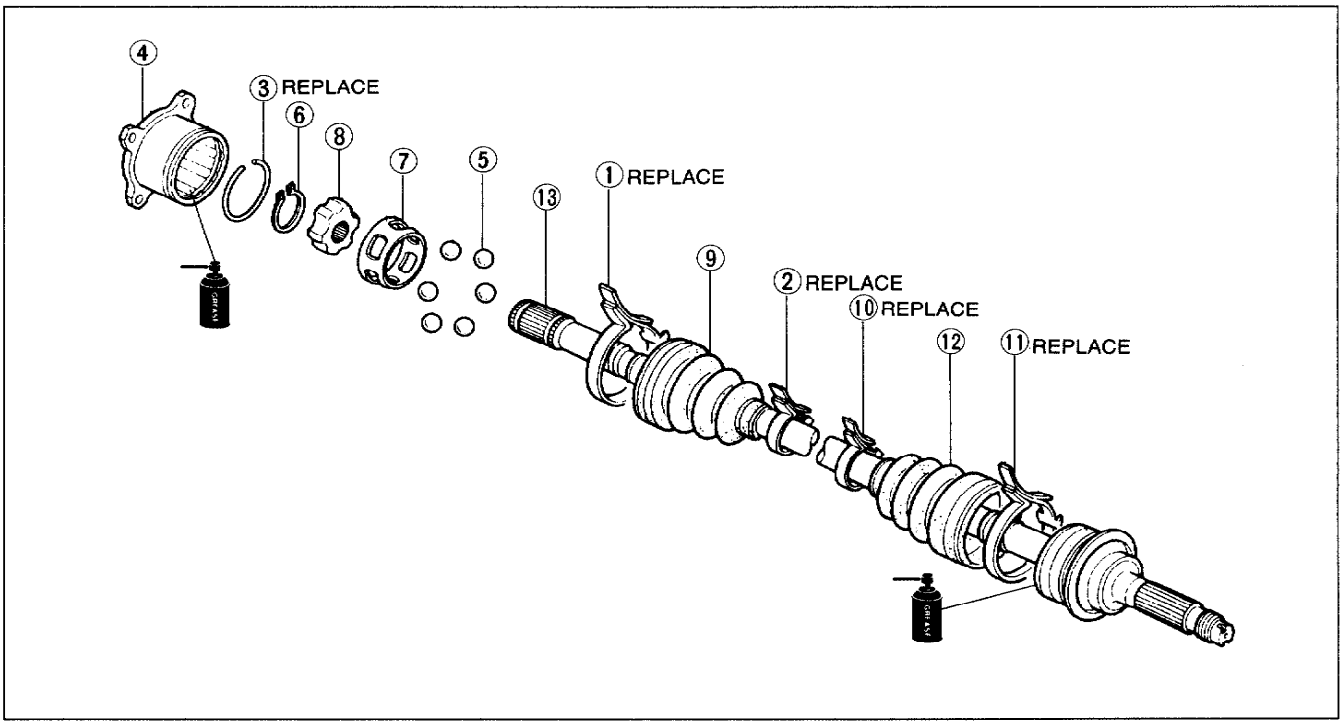

03U0MX-829

1. Boot band
2. Boot band
3. Clip
   Disassembly Note
   ..... page M–14
4. Outer ring
5. Ball
6. Snap ring
   Disassembly Note
   ..... page M–14
7. Cage
   Disassembly Note
   ..... page M–14
   Assembly Note page M–15
8. Inner ring
   Disassembly Note
   ..... page M–14
9. Boot
   Disassembly Note
   ..... page M–14
10. Boot band
11. Boot
   Disassembly Note
   ..... page M–14
   Assembly Note page M–15
12. Axleshaft
   Inspect for bending, twisting and other damage

Downloaded from www.Manualslib.com manuals search engine

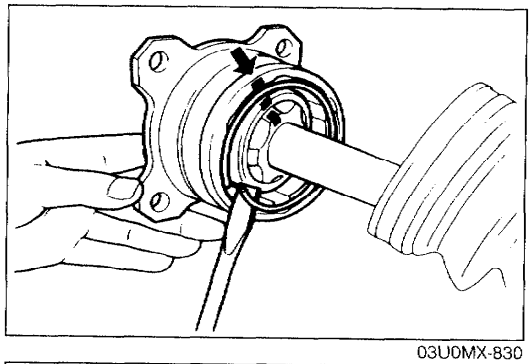

03U0MX-830

Disassembly Note
Clip

Caution
- **Mark with paint, do not use a punch.**

1. Mark the outer ring and the cage for proper reassembly.
2. Remove the clip with a screwdriver.

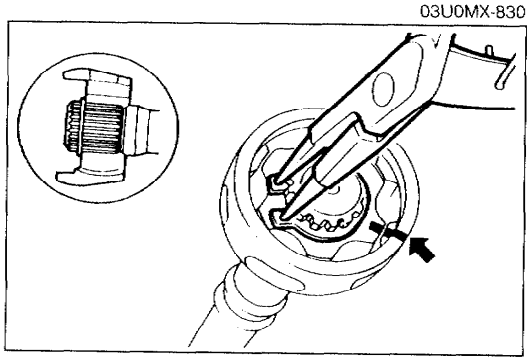

03U0MX-831

Snap ring

Caution
- **Mark with paint, do not use a punch.**

1. Mark the axleshaft, the cage and the inner ring for proper reassembly.
2. Remove the snap ring with snap-ring pliers.

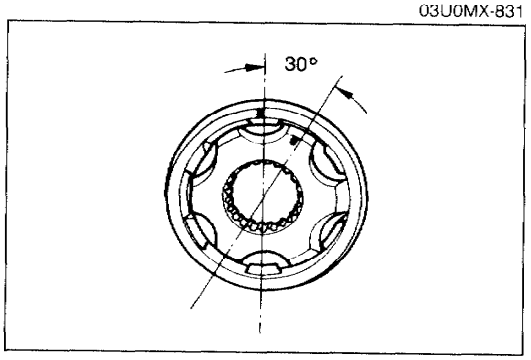

03U0MX-832

Cage
1. Turn the cage approximately 30°, then pull it away from the inner ring.

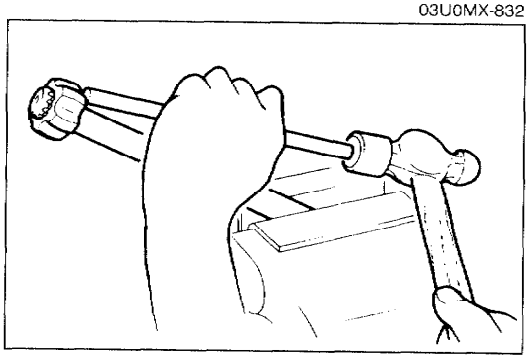

03U0MX-833

Inner ring
1. Remove the inner ring from the driveshaft with a bar and a hammer.

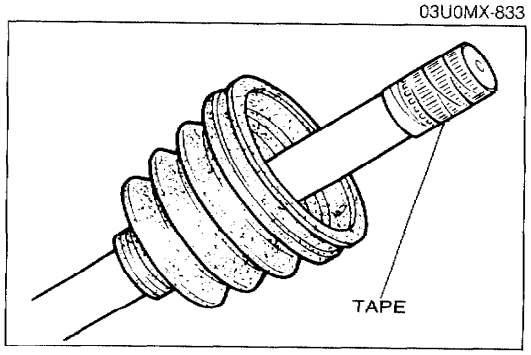

03U0MX-834

Boot

Caution
- **Do not remove the boot (wheel side) if not necessary.**

1. Wrap the splines of the driveshaft with tape to prevent damaging the boot.
2. Remove the boot.

Downloaded from www.Manualslib.com manuals search engine

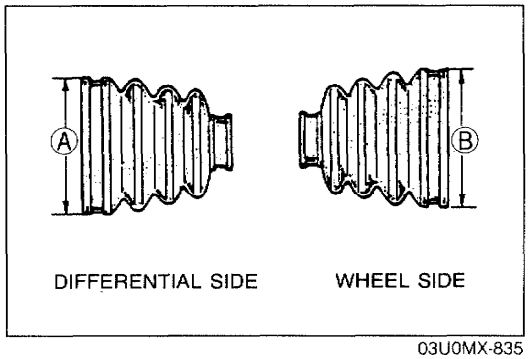

03U0MX-835

Assembly Note
Boot

Caution
- **The wheel-side and transaxle-side boots are different.**

A: 89.9mm (3.54 in)
B: 85.2mm (3.35 in)

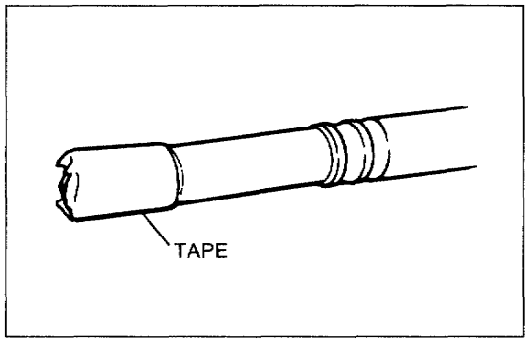

03U0MX-836

1. Wrap the splines of the wheel side of the shaft with tape and install the boot and a new boot band.

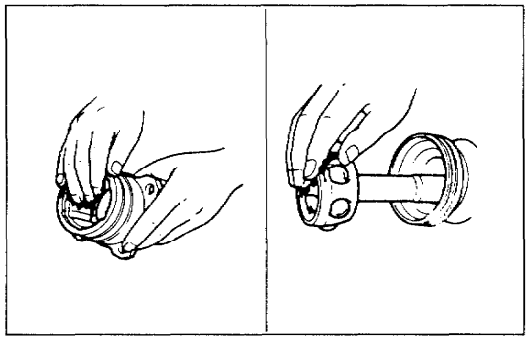

03U0MX-837

Caution
- **Do not use other than the specified grease.**

2. Apply molybdenum disulfide grease to the joint.

Quantity
Differential side: 75 g (2.64 oz)
Wheel side : 80 g (2.82 oz)

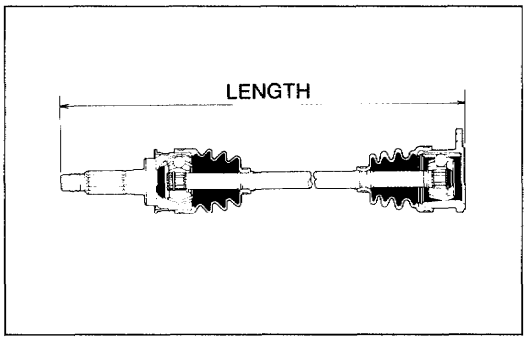

03U0MX-838

3. Measure the length of the driveshaft.

Standard length
Right side: 689mm (27.12 in)
Left side : 659mm (25.94 in)

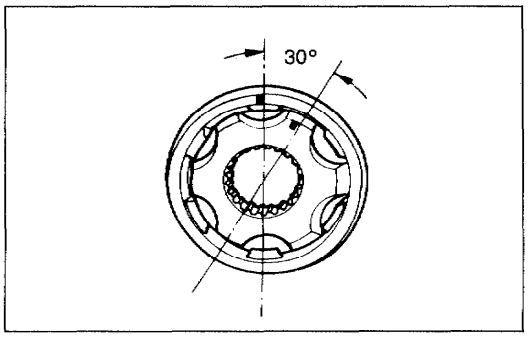

03U0MX-839

Cage
1. Install the cage at approximately 30° from the mark, then align the marks.

Downloaded from www.Manualslib.com manuals search engine

REAR DIFFERENTIAL

PREPARATION
SST

49 0107 680A Engine stand	For installation of differential carrier	49 M005 561 Hanger, diff. carrier	For support of differential carrier
49 S120 710 Holder, coupling flange	For removal and installation of flange nut	49 0839 425C Puller set, bearing	For removal of bearing inner race
49 0710 520 Puller, bearing	For removal of bearing inner race	49 F401 330B Installer set, bearing	For installation of bearing inner race
49 8531 565 Pinion model	For measurement of pinion height	49 0727 570 Gage body, pinion height (Part of 49 F027 0A0)	For measurement of pinion height
49 N027 001 Gauge block	For measurement of pinion height	49 M005 795 Installer set, oil seal	For installation of oil seal
49 0259 720 Wrench, diff. side bearing adjusting nut	For adjustment of drive pinion and ring gear backlash	49 0727 415 Installer, bearing	For installation of oil seal
49 G038 338 Attachment E	For installation of bearing inner race	49 8531 567 Collar A	For measurement of pinion height
49 F401 331 Body (Part of 49 D017 2A1)	For installation of bearing inner race	49 F401 336B Attachment B (Part of 49 D017 2A1)	For installation of bearing inner race

Downloaded from www.Manualslib.com manuals search engine

49 M005 796 Body (Part of 49 M005 795)		For installation of oil seal

03U0MX-840

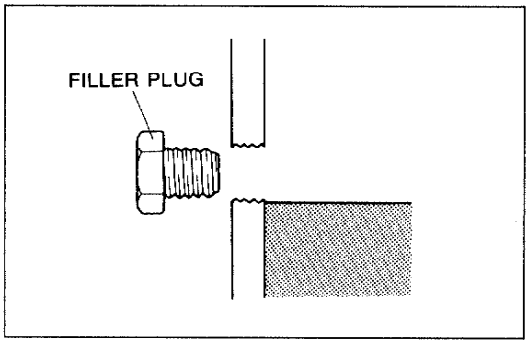

9MU0MX-033

DIFFERENTIAL OIL

Inspection

1. Remove the filler plug.
2. Verify that the oil is at the bottom of the filler plug hole. If it is low, add the specified oil.
3. Install the filler plug.

Tightening torque:
39—54 N·m (4.0—5.5 m-kg, 29—40 ft-lb)

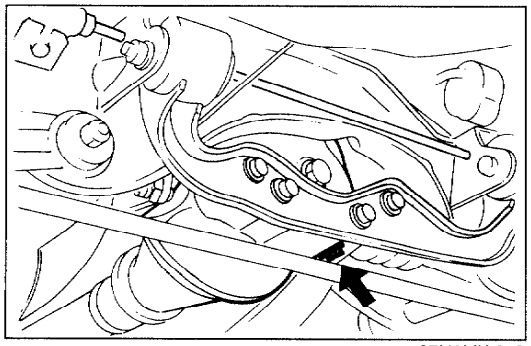

97U0MX-048

Replacement

1. Remove the filler and drain plugs.
2. Drain the differential oil into a suitable container.
3. Wipe the plugs clean.
4. Install the drain plug and washer.

Tightening torque:
39—54 N·m (4.0—5.5 m-kg, 29—40 ft-lb)

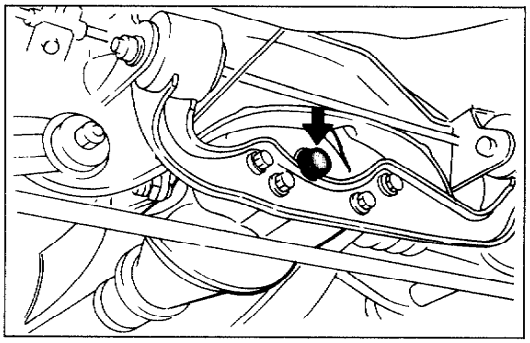

03U0MX-841

5. Add the specified oil from the filler plug until the level reaches the bottom of the plug hole.

Specified oil
Type:
Above –18°C (0°F): GL-5, SAE 90
Below –18°C (0°F): GL-5, SAE 80W
Capacity: 0.65 liter (0.6 US qt, 0.5 Imp qt)

6. Install the filler plug.

Tightening torque:
39—54 N·m (4.0—5.5 m-kg, 29—40 ft-lb)

Downloaded from www.Manualslib.com manuals search engine

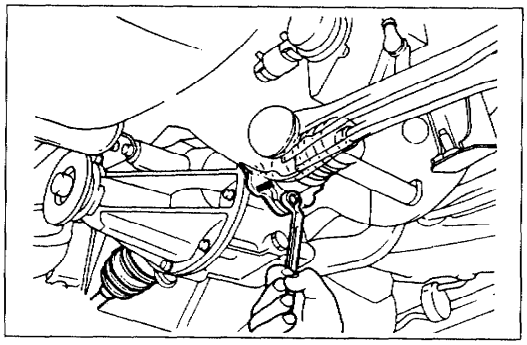

03U0MX-842

OIL SEAL (OUTPUT SHAFT)

Replacement

1. Jack up the vehicle and support it with safety stands.
2. Drain the differential gear oil.

Note

- **Mark the driveshaft and output shaft flanges for proper reassembly.**

3. Separate the driveshaft from the differential, and suspend it as shown in the figure.

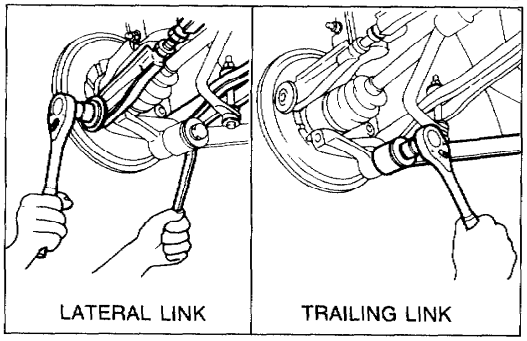

03U0MX-843

4. Remove the lateral link.
5. Remove the trailing link.
6. Pull the wheel hub out to separate the driveshaft from the output shaft.

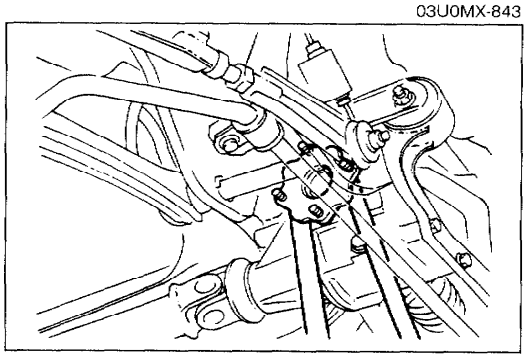

03U0MX-844

7. Remove the output shaft with two pry bars as shown in the figure.

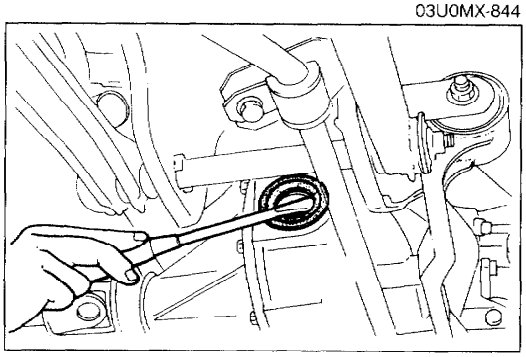

03U0MX-845

8. Remove the oil seal with a screwdriver.

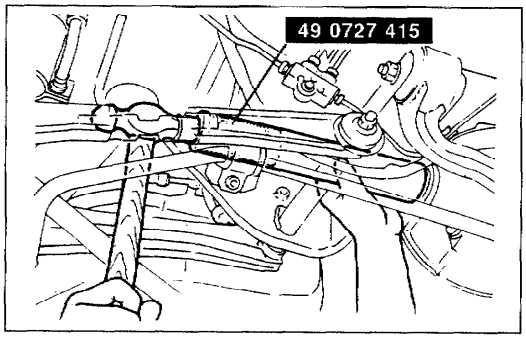

03U0MX-846

9. Apply lithium-base grease to the new oil seal lip and install it with the **SST**.

Downloaded from www.Manualslib.com manuals search engine

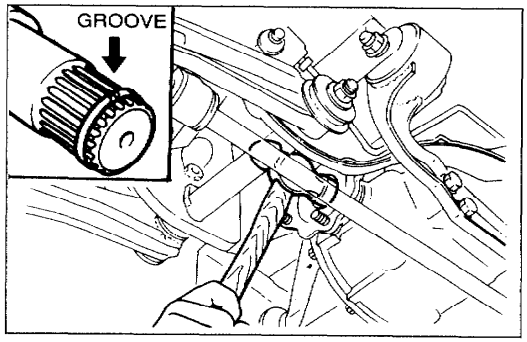

03U0MX-847

10. Install a new clip at the end of the output shaft.
11. Install the output shaft into the side gear by lightly tapping with a plastic hammer.
12. Verify that the output shaft is hooked into the side gear by pulling it by hand.

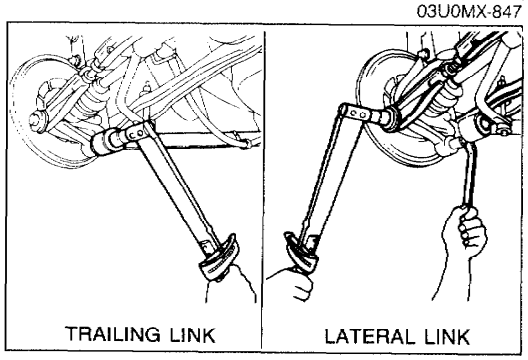

03U0MX-848

13. Install the lateral link.

Tightening torque:
63—75 N·m (6.4—7.6 m-kg, 46—55 ft-lb)

14. Install the trailing link.

Tightening torque:
49—59 N·m (5.0—6.0 m-kg, 36—43 ft-lb)

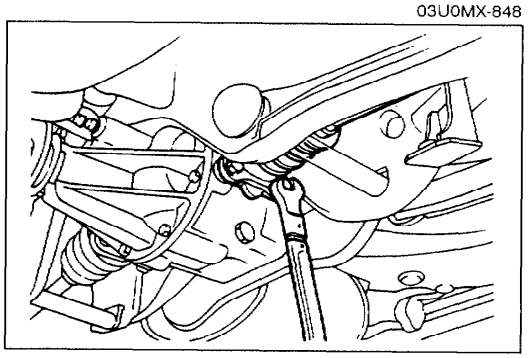

03U0MX-849

15. Align the marks and reinstall the driveshaft.

Tightening torque:
49—59 N·m (5.0—6.0 m-kg, 36—43 ft-lb)

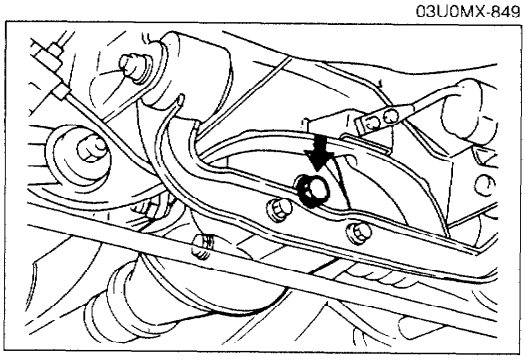

03U0MX-850

16. Add the specified oil through the filler plug hole until it reaches the bottom of the hole.

Specified oil
Type:
Above −18°C (0°F): GL-5, SAE 90
Below −18°C (0°F): GL-5, SAE 80W
Capacity:
0.65 liter (0.6 US qt, 0.5 Imp qt)

17. Install the filler plug and a new gasket.

Tightening torque:
39—54 N-m (4.0—5.5 m-kg, 29—40 ft-lb)

Downloaded from www.Manualslib.com manuals search engine

REAR DIFFERENTIAL
Removal / Installation

Note
- **Drain the differential oil before removal.**

1. Remove in the order shown in the figure, referring to **Removal Note**.
2. Install in the reverse order of removal, referring to **Installation Note**.

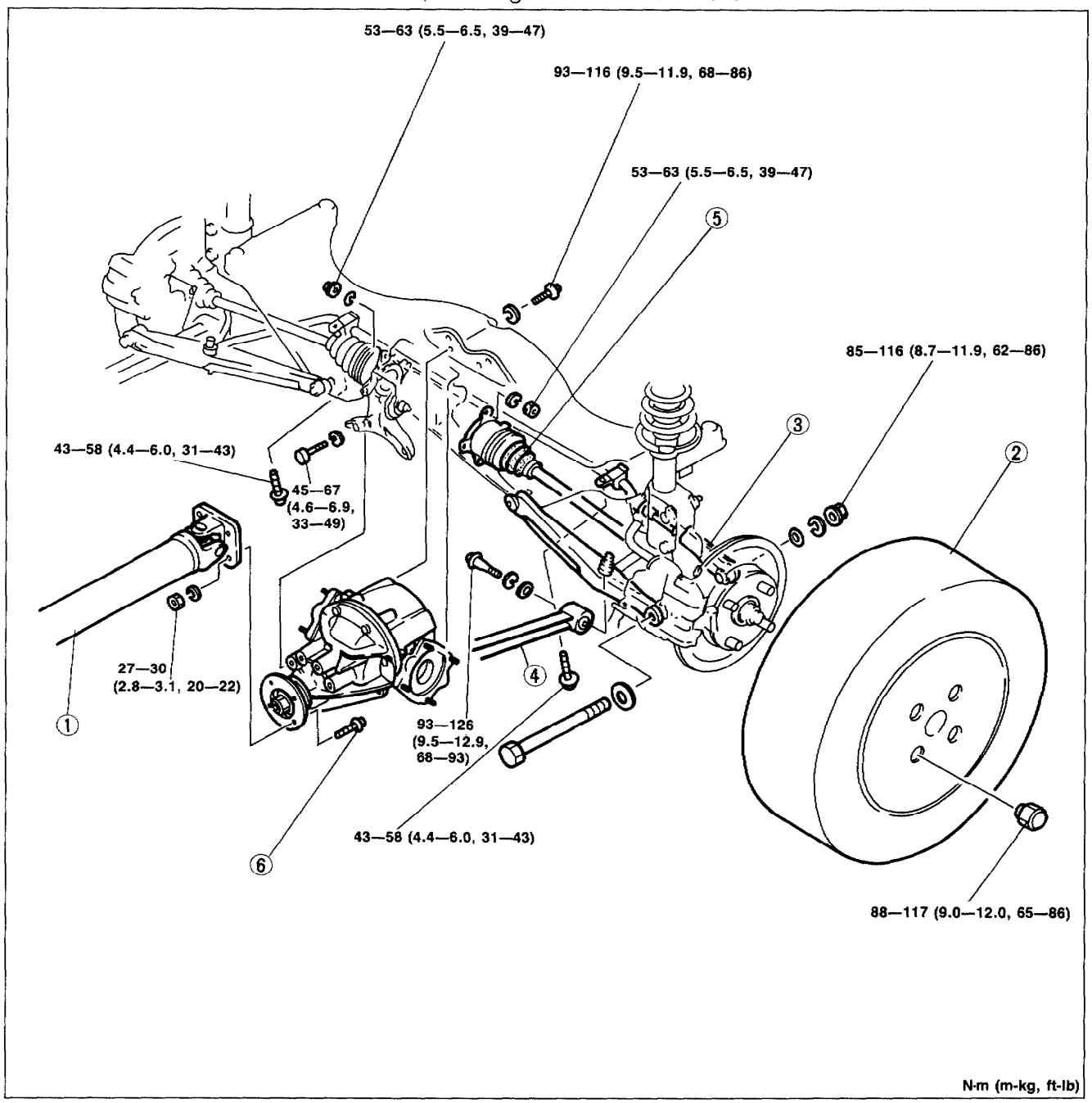

03U0MX-851

1. Propeller shaft
   Service ..... Section L
2. Wheel and tire
3. Lateral link
4. Trailing link
5. Driveshaft
   Disassembly Note
   ..... page M–21
   Assembly Note page M–21
6. Rear differential
   Disassembly Note
   ..... page M–21
   Assembly Note page M–21
   Overhaul..... page M–22

Downloaded from www.Manualslib.com manuals search engine

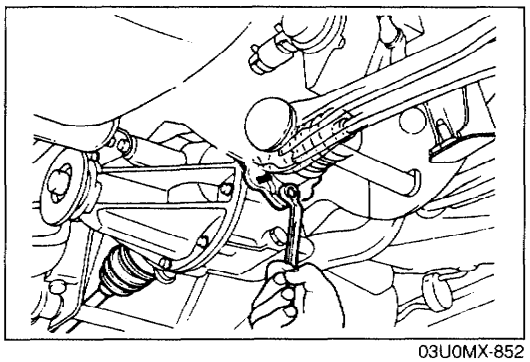

03U0MX-852

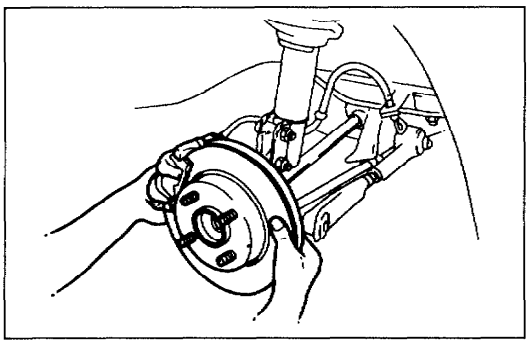

03U0MX-853

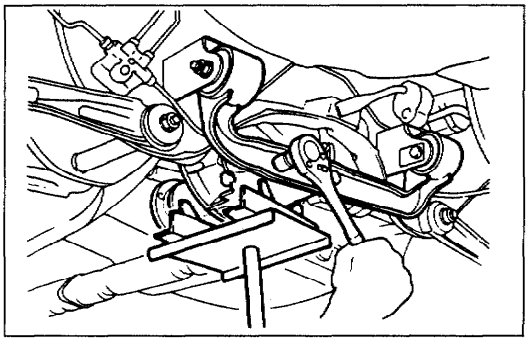

03U0MX-854

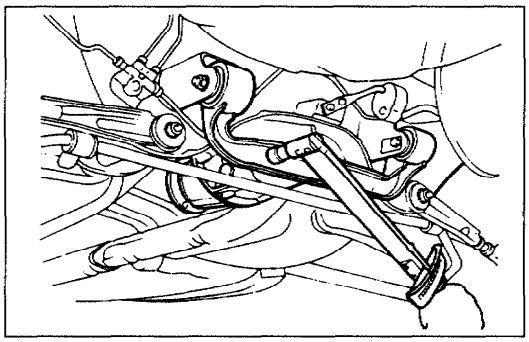

03U0MX-855

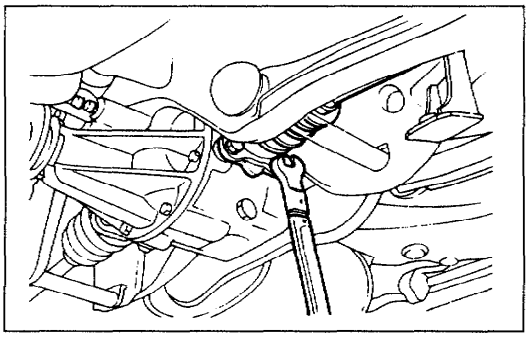

03U0MX-856

Removal Note
Driveshaft

1. Before removing the driveshaft, mark the driveshaft and output shaft for proper reassembly.

2. Pull the wheel hub out to separate the driveshaft from the output shaft.

Rear differential

1. Support the differential with a jack while removing it.

Installation Note
Rear differential

1. Support the differential with a jack while installing it.

Tightening torque:
Front: 45—68 N·m (4.6—6.9 m-kg, 33—50 ft-lb)
Rear: 93—116 N·m (9.5—11.9 m-kg, 68—86 ft-lb)

Driveshaft

1. Align the marks and reinstall the driveshaft.

Tightening torque:
53—63 N·m (5.5—6.5 m-kg, 39—47 ft-lb)

Downloaded from www.Manualslib.com manuals search engine

Overhaul

Caution

- **Install the differential carrier within 10 min. after applying sealant. Allow the sealant to set at least 30 min. after installation before filling the differential with the specified oil.**

1. Disassemble in the order shown in the figure, referring to **Disassembly Note**.
2. Inspect all parts and repair or replace as necessary.
3. Assemble in the reverse order of disassembly, referring to **Assembly Note**.

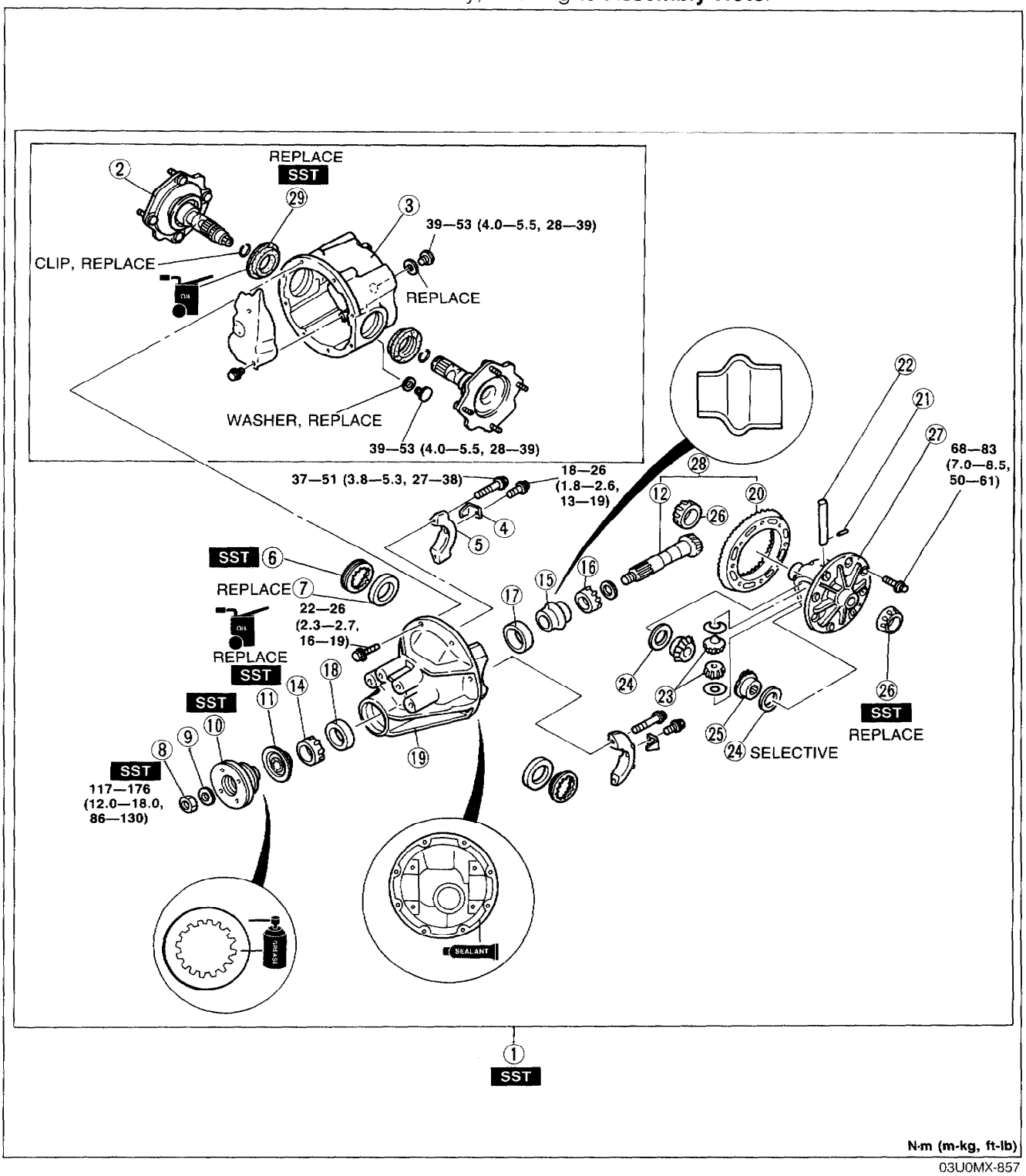

03U0MX-857

Downloaded from www.Manualslib.com manuals search engine

1. Differential gear assembly
   Disassembly Note..... page M–24
2. Output shaft
   Disassembly Note..... page M–24
   Assembly Note ..... page M–31
3. Differential case
   Assembly Note ..... page M–31
4. Lock plate
5. Bearing cap
   Disassembly Note..... page M–24
6. Adjusting screw
   Disassembly Note..... page M–24
7. Bearing outer race (Side bearing)
8. Nut (Companion flange)
   Disassembly Note..... page M–24
   Assembly Note ..... page M–28
9. Washer
10. Companion flange
    Disassembly Note..... page M–24
    Inspect splines for cracks and other damage
    Assembly Note ..... page M–28
11. Oil seal (Companion flange)
    Assembly Note ..... page M–28
12. Drive pinion
    Assembly Note ..... page M–25
    Inspect splines for cracks and other damage
13. Spacer
14. Bearing inner race (Front bearing)
    Inspect for rough rotation
15. Collapsible spacer
16. Bearing inner race (Rear bearing)
    Disassembly Note..... page M–25
    Inspect for rough rotation
17. Bearing outer race (Rear bearing)
    Disassembly Note..... page M–25
18. Bearing outer race (Front bearing)
    Disassembly Note..... page M–25
19. Differential carrier
20. Ring gear
    Inspect for cracks and other damage
21. Roll pin
    Disassembly Note..... page M–25
22. Pinion shaft
23. Pinion gear
    Inspect for cracks and other damage
24. Thrust washer
25. Side gear
    Inspect for cracks and other damage
26. Bearing inner race (Side bearing)
27. Gear case
28. Final gear set
29. Oil seal (Output shaft)
    Assembly Note ..... page M–31

03U0MX-858

Downloaded from www.Manualslib.com manuals search engine

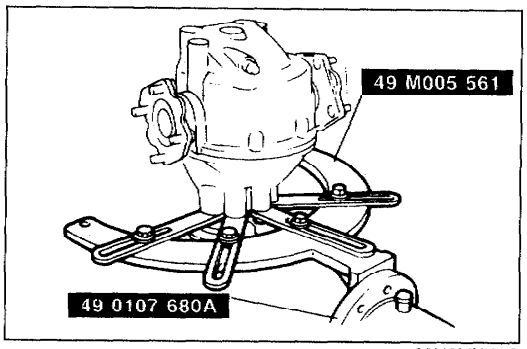

03U0MX-859

Disassembly Note
Differential gear assembly
1. Mount the differential carrier on the **SST**.

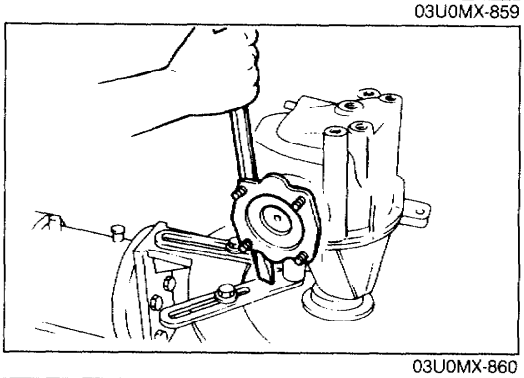
03U0MX-860

Output shaft
1. Remove the output shaft with a pry bar as shown in the figure.

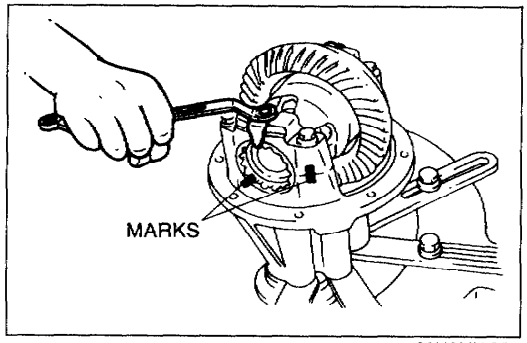

03U0MX-861

Bearing cap
1. Mark one bearing cap and the carrier.

Adjusting screw
1. Mark one adjusting screw and the carrier.

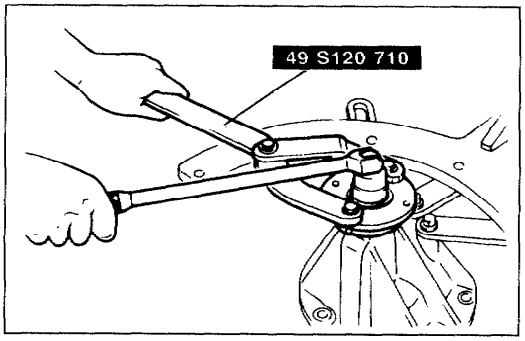

03U0MX-862

Nut (Companion flange)
1. Hold the companion flange with the **SST** and remove the nut.

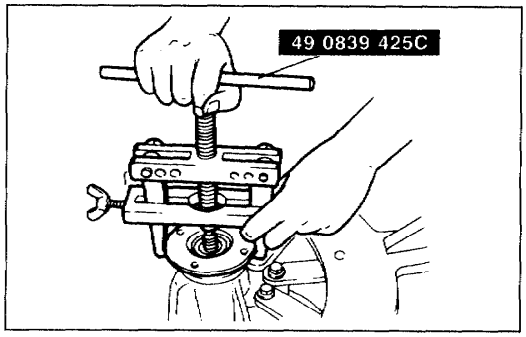

03U0MX-863

Companion flange
1. Remove the companion flange with the **SST**.

Downloaded from www.Manualslib.com manuals search engine

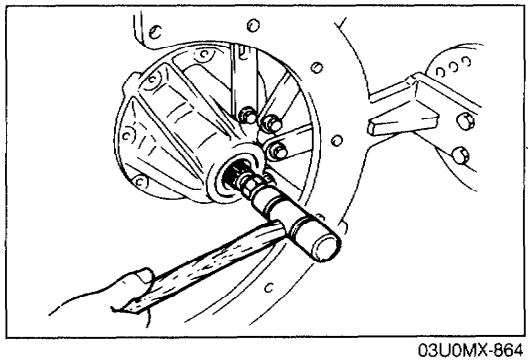

03U0MX-864

Drive pinion

1. Push out the drive pinion by attaching a miscellaneous nut to the drive pinion and tapping it with a copper hammer.

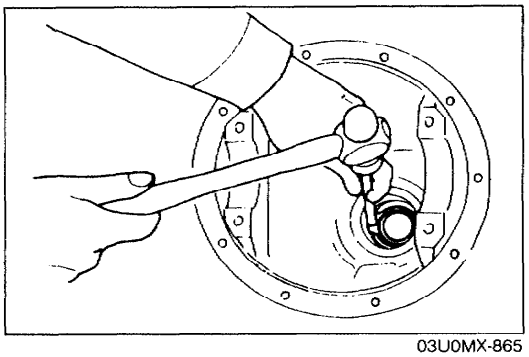

03U0MX-865

Bearing outer race (Front), (Rear)

Note
- **Identify the bearing outer races for proper reassembly.**

1. Remove the bearing outer races by alternately tapping the races at the two grooves in the carrier.

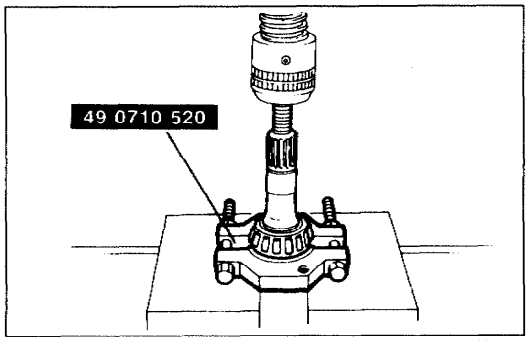

03U0MX-866

Bearing inner race (Rear bearing)

Note
- **Support the drive pinion by hand so that it does not fall.**

1. Remove the rear bearing with the **SST**.

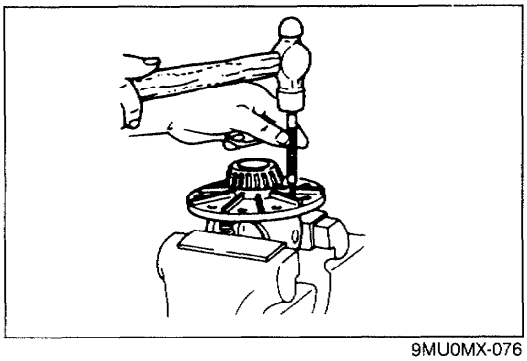

9MU0MX-076

Knock pin

Note
- **Tap out toward the ring gear side.**

1. Secure the gear case in a vise and remove the knock pin.

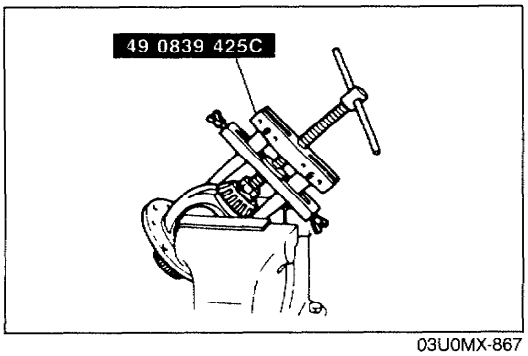

03U0MX-867

Bearing inner races (Side bearing)

Note
- **Do not remove the bearing inner races if not necessary.**
- **Replace the bearing inner races with new bearings if removed.**

1. Remove the side bearings from the gear case with the **SST**.

Downloaded from www.Manualslib.com manuals search engine

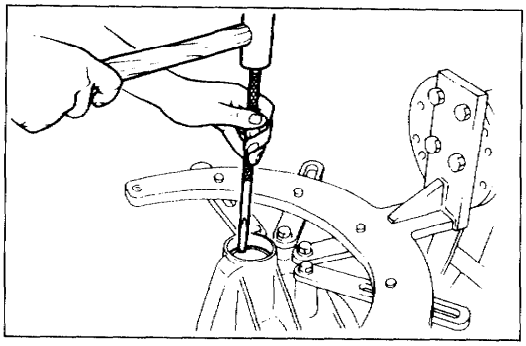

03U0MX-868

Assembly Note
Bearing outer race

1. Install the front and rear bearing outer races with a brass drift and a hammer.

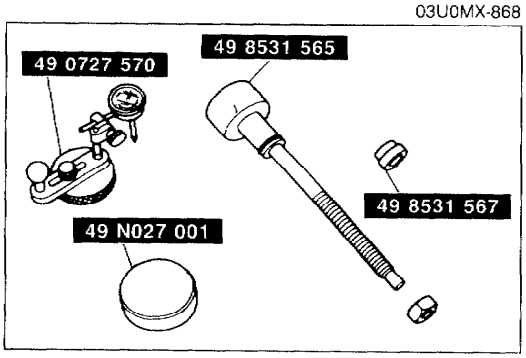

03U0MX-869

Adjustment of pinion height

1. Adjust the drive pinion height as follows with the **SST**.

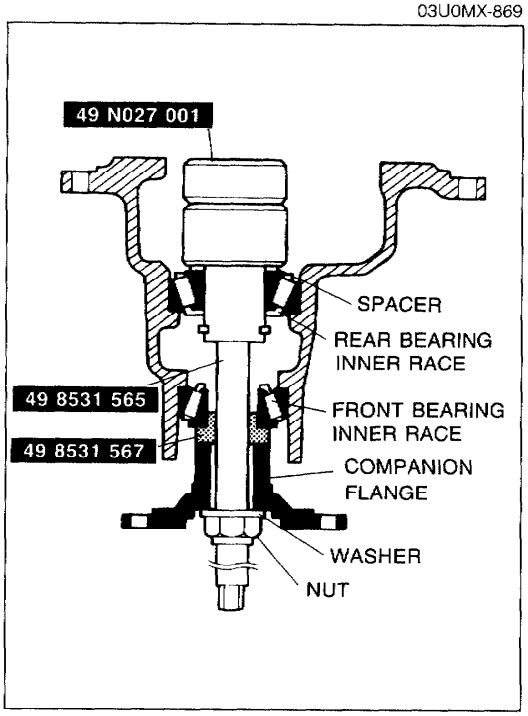

03U0MX-870

Note
- **Use the spacer that was removed.**
- **Do not install the collapsible spacer.**

a) Install the bearing inner race (rear), spacer, O-ring and **SST**.
b) Install the bearing inner race (front), companion flange, washer, and nut.
c) Tighten the nut just enough so that the **SST** can be turned by hand.

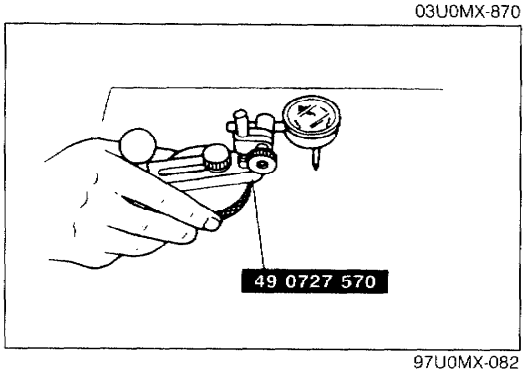

97U0MX-082

d) Place the **SST** on a surface plate and set the dial indicator to "Zero".

Downloaded from www.Manualslib.com manuals search engine

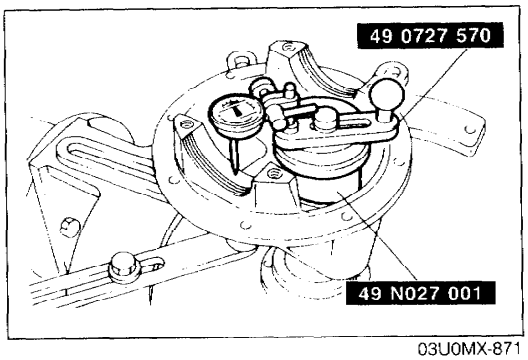

03U0MX-871

e) Place the **SST** atop the drive pinion model. Set the gauge body atop the gauge block.
f) Place the feeler of the dial indicator so that it contacts where the bearing inner race (side bearing) is installed in the carrier. Measure the lowest position on the left and right sides of the carrier.

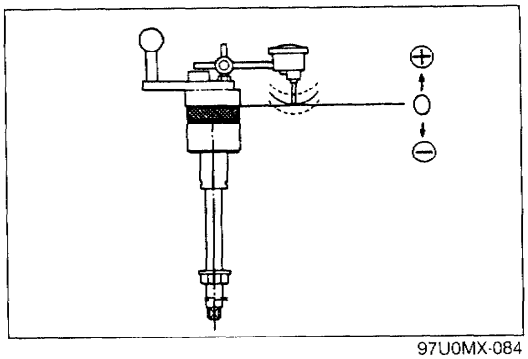

97U0MX-084

g) Add the two (left and right) values obtained in Step f, and divide the total by 2.

Specification: 0mm (0 in)

Mark	Thickness	Mark	Thickness
08	3.08mm (0.1213 in)	29	3.29mm (0.1295 in)
11	3.11mm (0.1224 in)	32	3.32mm (0.1307 in)
14	3.14mm (0.1236 in)	35	3.35mm (0.1319 in)
17	3.17mm (0.1248 in)	38	3.38mm (0.1331 in)
20	3.20mm (0.1260 in)	41	3.41mm (0.1343 in)
23	3.23mm (0.1271 in)	44	3.44mm (0.1354 in)
26	3.26mm (0.1283 in)	47	3.47mm (0.1366 in)

97U0MX-085

h) If it is not within specification, adjust the pinion height by selection of a spacer.

Note
- **Spacers are available in increments of 0.03mm. Select the spacer thickness that is closest to that necessary.**

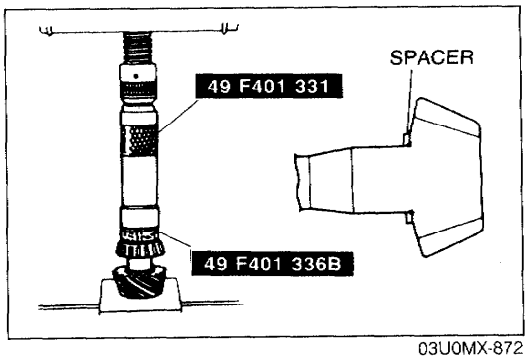

03U0MX-872

Adjustment of drive pinion preload

1. Install the spacer.

Note
- **Press the bearing on until the force required suddenly increases.**
- **Install the spacer selected from the pinion height adjustment above, being careful that the installation direction is correct.**

2. Press the bearing inner race (rear bearing) on with the **SST**.

Caution
- **Do not install the oil seal.**

3. Install the collapsible spacer.
4. Install the drive pinion assembly.
5. Install the companion flange, and tighten the flange nut.

Tightening torque: 117 N·m (12 m-kg, 86 ft-lb)

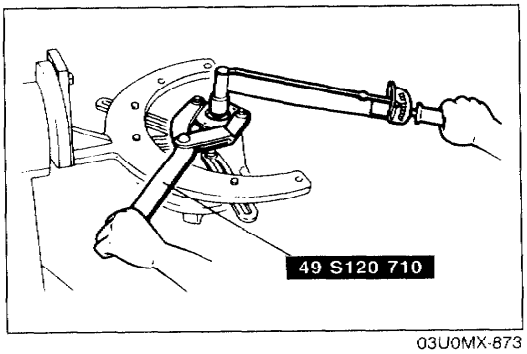

03U0MX-873

Downloaded from www.Manualslib.com manuals search engine

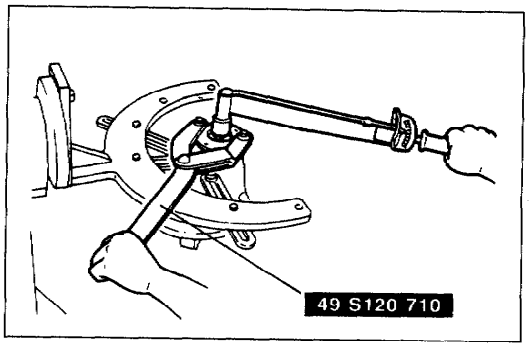

03U0MX-874

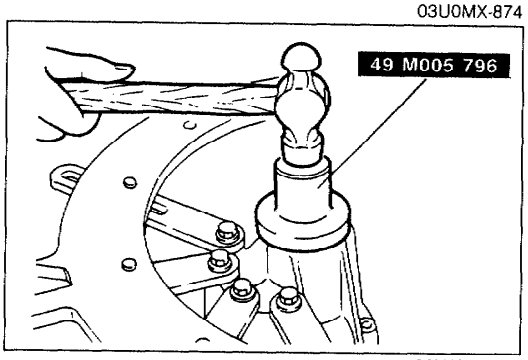

03U0MX-875

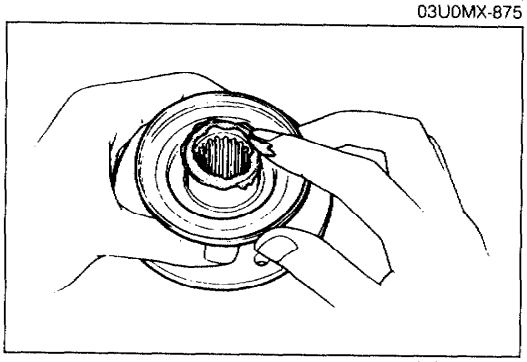
03U0MX-876

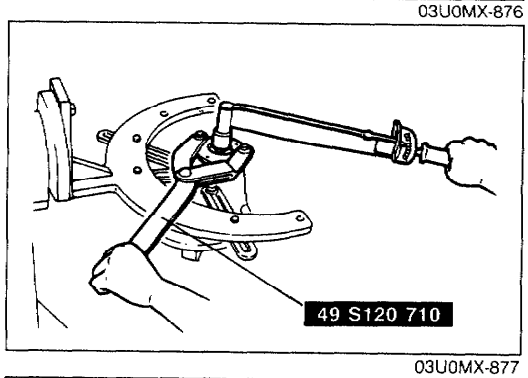

03U0MX-877

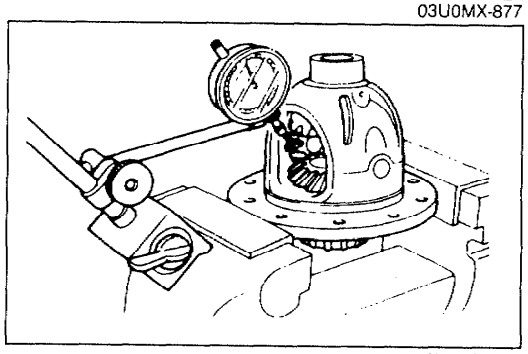
03U0MX-878

6. Turn the companion flange by hand to seat the bearing.
7. Measure the drive pinion preload.
   Adjust the preload by tightening the flange nut.

   Preload:
   0.29—0.68 N·m (3—7 cm-kg, 2.6—6.0 in-lb)

   Tightening torque:
   117—176 N·m (12—18 m-kg, 86—130 ft-lb)

   If the specified preload cannot be obtained, replace the collapsible spacer with a new one and check again.
8. Remove the nut, washer, and companion flange.

Oil seal (Companion flange)

Caution
- **Apply differential oil to the oil seal lip.**

1. Tap a new oil seal into the differential carrier with the **SST**.

Companion flange
1. Apply a light coat of grease to the end face of the companion flange.

Nut (Companion flange)
1. Adjust the preload by tightening the flange nut.

   Preload:
   0.29—0.68 N·m (3—7 cm-kg, 2.6—6.0 in-lb)

   Tightening torque:
   117—176 N·m (12—18 cm-kg, 86—130 in-lb)

Adjustment of side gear and pinion gear backlash
1. Measure the backlash of the side gears and pinion gears. Adjust by inserting the proper thickness thrust washer at both sides.

   Backlash: 0—0.1mm (0—0.004 in)

Downloaded from www.Manualslib.com manuals search engine

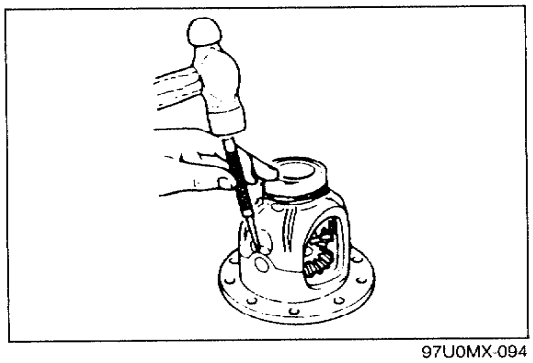

97U0MX-094

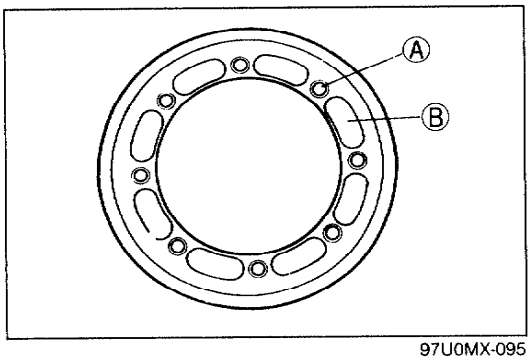

97U0MX-095

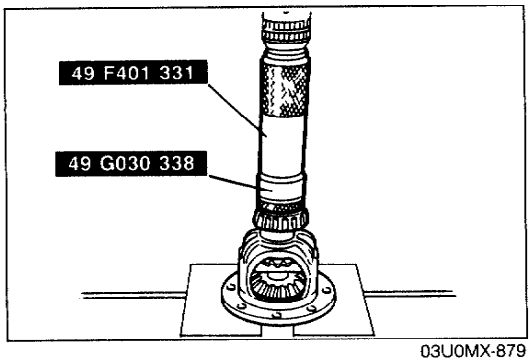

03U0MX-879

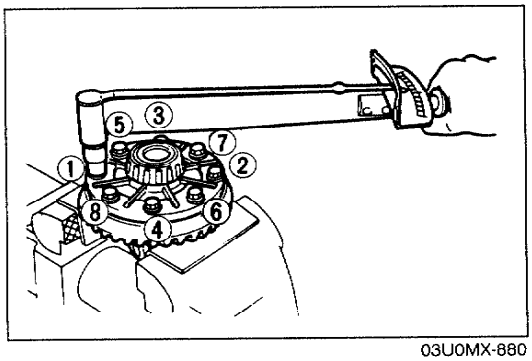

03U0MX-880

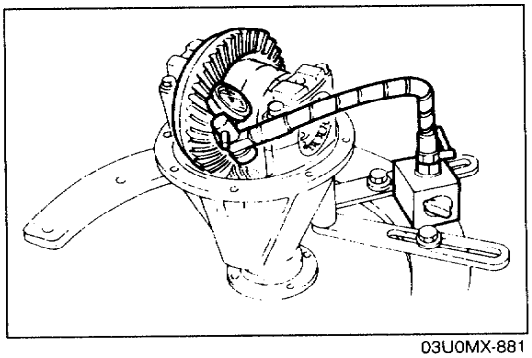

03U0MX-881

Thrust washer thickness:

Identification mark	Thickness
0	2.00mm (0.0787 in)
05	2.05mm (0.0807 in)
1	2.10mm (0.0827 in)
15	2.15mm (0.0846 in)
2	2.20mm (0.0866 in)

2. Install the knock pin to secure the pinion shaft. Stake the pin with a punch to prevent it from coming out of the case.

Adjustment of drive pinion and ring gear backlash

Note
- **Apply approx. 0.04 cc (0.0024 cu in) of compound at each point.**

1. Apply thread-locking compound to points Ⓐand Ⓑaround the gear back face.
2. Mount the ring gear onto the gear case.

Tightening torque:
69—83 N·m (7.0—8.5 m-kg, 51—61 ft-lb)

3. Press the new bearing inner race (side gear) on with the **SST**.

4. Install the differential gear assembly in the carrier.
5. Note the identification mark on the adjusting screw, and install the screws to their respective sides.
6. Install the differential bearing caps, making sure that the identification mark on the cap corresponds with the one on the carrier with the **SST**.

7. Mark the ring gear at four points at approx. **90°** intervals. Mount a dial indicator to the carrier so that the feeler comes into contact at a right angle with one of the ring gear teeth.
8. Turn both bearing adjusting screw, equally with the **SST** until the backlash is as specified.

Backlash: 0.09—0.11mm (0.0035—0.0043 in)

Downloaded from www.Manualslib.com manuals search engine

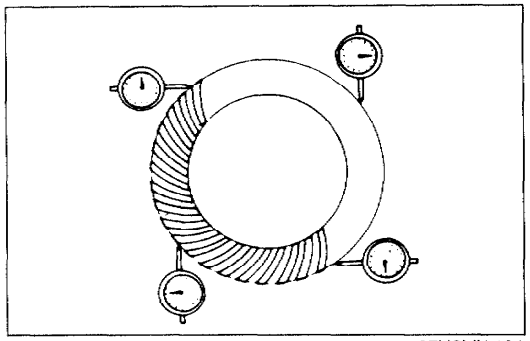

97U0MX-104

9. Check the backlash at the three other marked points, and make sure the minimum backlash is above **0.05mm (0.0020 in)** and the difference between the maximum and minimum is less than **0.07mm (0.0028 in)**.

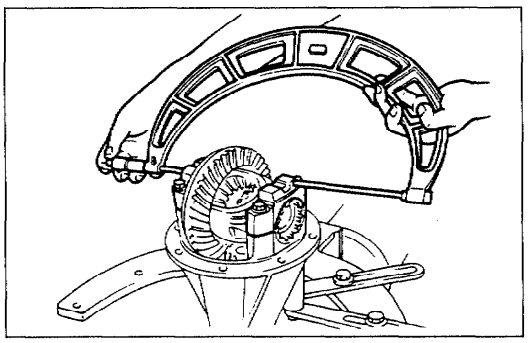

03U0MX-882

10. Tighten the adjusting screws equally until the distance between the pilot sections on the bearing caps is as specified.

Specified distance:
150.13—150.20mm (5.910—5.913 in)

Note
- **When adjusting the differential bearing preload, be careful not to affect the backlash of the drive pinion and ring gear.**

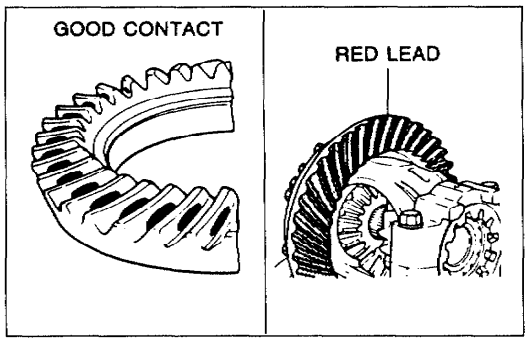

03U0MX-883

Inspection and adjustment of teeth contact

1. Coat both surfaces of 6—8 teeth of the ring gear with a uniformly thin coat of red lead.
2. While moving the ring gear back and forth by hand, rotate the drive pinion several times and check the tooth contact.
3. If the tooth contact is good, wipe off the red lead.
4. If it is not good, readjust the pinion height, and then readjust the backlash.

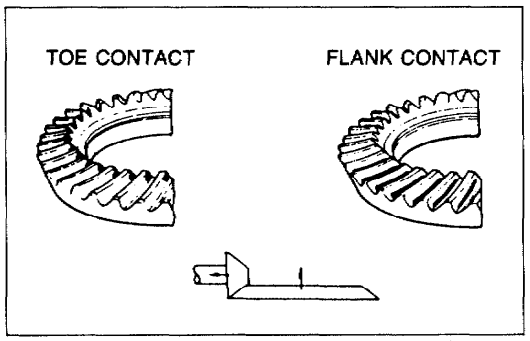

63G09X-385

(1) Toe and flank contact
Replace the spacer with a thinner one to move the drive pinion outward.

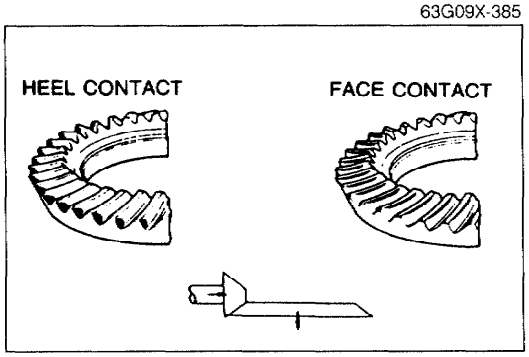

9MU0MX-068

(2) Heel and face contact
Replace the spacer with a thicker one to bring the drive pinion inward.

Downloaded from www.Manualslib.com manuals search engine

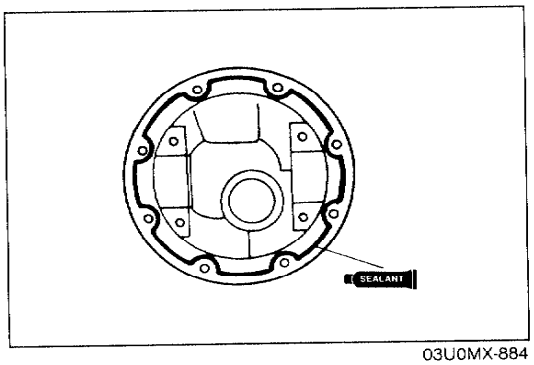

03U0MX-884

Differential case

1. Apply sealant to the case face.
2. Tighten the bolts.

Tightening torque:
23—26 N·m (2.3—2.7 m-kg, 10—20 ft-lb)

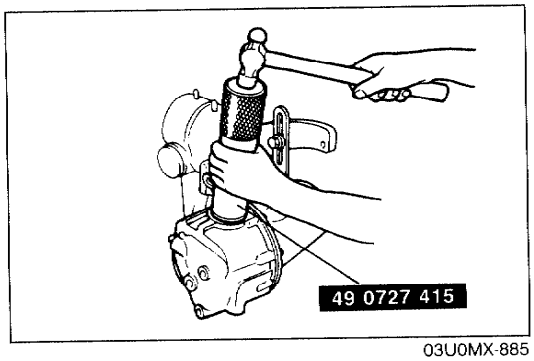

03U0MX-885

Oil seal (Output shaft)

Caution
- **Apply lithium-base grease to the new oil seal lip.**

1. Install the new oil seal with the **SST**.

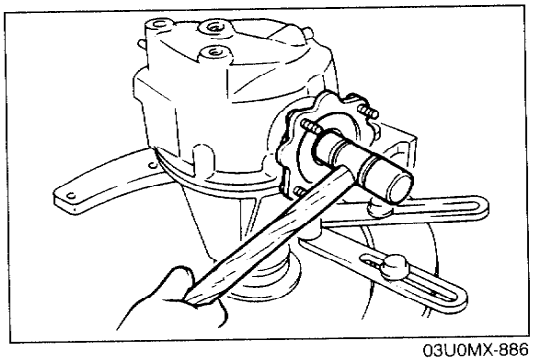

03U0MX-886

Output shaft

1. Install new clips.
2. Install the output shaft into the side gears by lightly tapping with a plastic hammer.
3. Verify that the output shafts are hooked into the side gears by pulling them by hand.

Downloaded from www.Manualslib.com manuals search engine

Downloaded from www.Manualslib.com manuals search engine

STEERING SYSTEM

INDEX ..... **N– 2**

FEATURES

OUTLINE ..... **N– 3**
SPECIFICATION ..... **N– 3**

SERVICE

SUPPLEMENTAL SERVICE INFORMATION .. **N– 3**
ENGINE SPEED SENSING
POWER STEERING ..... **N– 4**
PREPARATION ..... **N– 4**
POWER STEERING FLUID ..... **N– 6**
STEERING GEAR AND LINKAGE ..... **N– 7**
POWER STEERING OIL PUMP **N–17**

03U0NX-801

Downloaded from www.Manualslib.com manuals search engine

INDEX

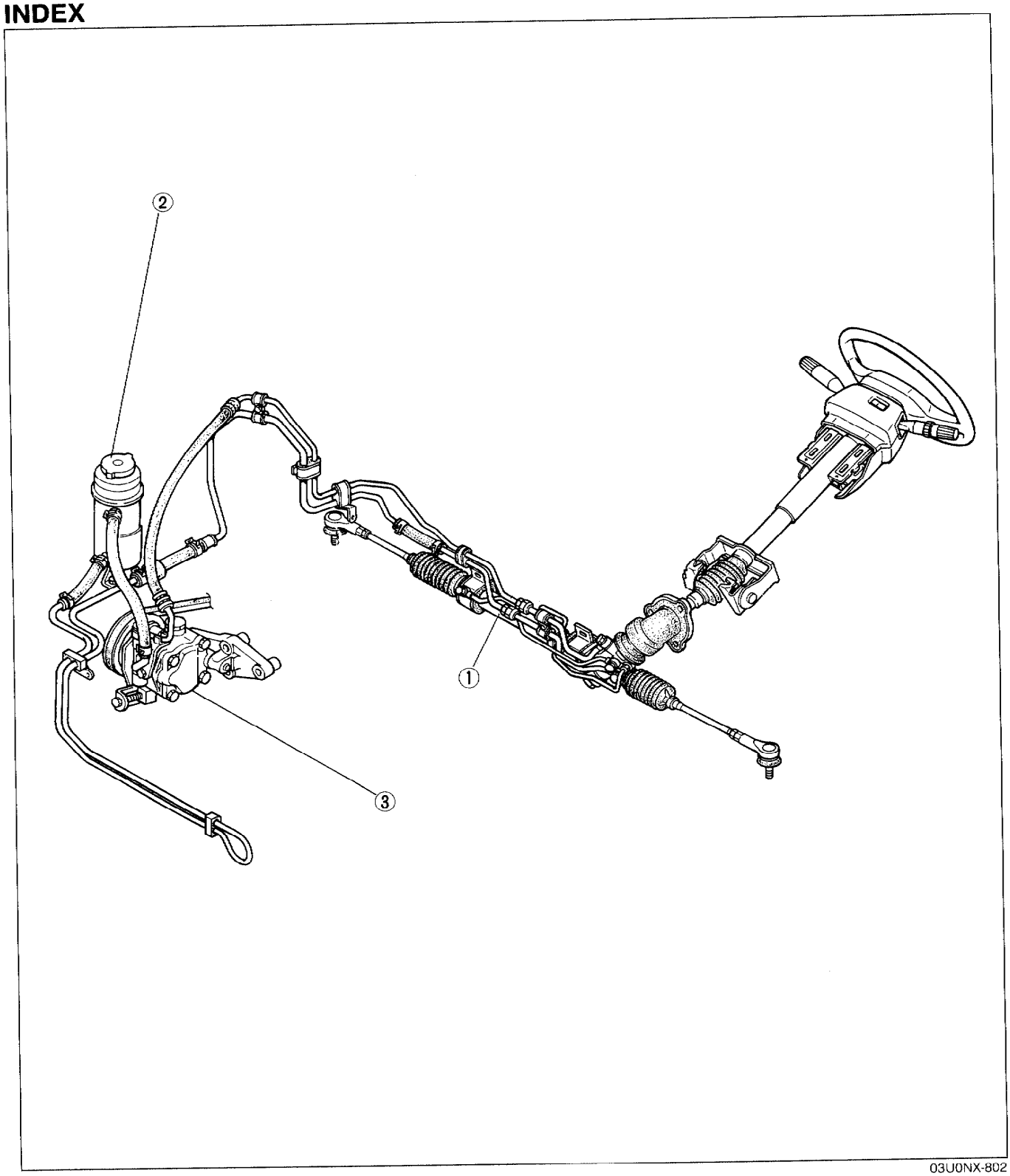

03U0NX-802

1. Steering gear and linkage
Removal / Installation..... page N– 7
Disassembly / Inspection / Assembly
..... page N–10

2. Power steering fluid
Inspection..... page N– 6

3. Power steering oil pump
Disassembly / Inspection / Assembly
..... page N–17

Downloaded from www.Manualslib.com manuals search engine

OUTLINE

- A rack-and-pinion type steering is used on all models.
- The structure of steering system is basically same as 2WD models.

SPECIFICATION

Item	Type	Engine speed sensing power steering
Steering wheel	Outer diameter mm (in)	370 (14.57)
	Lock-to-lock turns	2.76
Steering shaft and joint	Shaft type	Collapsible
	Joint type	2-cross joint
	Tilt stroke mm (in)	30 (1.18)
Steering gear	Type	Rack-and-pinion
	Gear ratio	∞ (Infinite)
	Rack stroke mm (in)	121 (4.76)
Oil	Type	ATF M-Ⅲ or DEXRON-Ⅱ
	Capacity liter (US qt, Imp qt)	0.9—1.0 (0.95—1.06, 0.79—0.88)

03U0NX-803

SUPPLEMENTAL SERVICE INFORMATION

The following points shown in this section are changed in comparison with Workshop Manual (1195-10-89E).

Steering gear and linkage
- Removal / Installation procedure
- Disassembly / Inspection / Assembly procedure

Power steering fluid
- Inspection procedure

Power steering oil pump
- Disassembly / Inspection / Assembly procedure

03U0NX-804

Downloaded from www.Manualslib.com manuals search engine

ENGINE SPEED SENSING POWER STEERING

PREPARATION
SST

49 B032 306 Wrench, plug	For removal and installation of plug	49 B032 312 Protector, slipper seal	For installation of seal ring
49 B032 327 Wrench, outer box	For removal and installation of outer box	49 B032 326 Protector, outer box	For installation of outer box
49 B032 323 Remover body, rod seal	For removal of oil seal	49 B032 314 Slipper seal former	For form of seal ring
49 F032 303 Handle	For removal of oil seal	49 B032 315 Installer, oil seal	For installation of oil seal
49 B032 309 Installer body, pinion seal	For installation of oil seal	49 B032 316 Support block, plug	For removal of oil seal & bearing
49 B032 310 Protector, pinion seal	For installation of oil seal	49 B032 317 Remover, bearing & oil seal	For removal of oil seal & bearing
49 B032 311 Protector, slipper seal	For installation of pinion shaft	49 B032 325 Guide, rod seal	For installation of inner guide & oil seal
49 G030 797 Handle	For installation of pinion seal	49 B032 324 Protector body, rod seal	For installation of inner guide & oil seal

Downloaded from www.Manualslib.com manuals search engine

49 B032 320 Wrench	For removal and installation of adjustment cover locknut	49 0180 510B Attachment, preload	For measurement of pinion torque
49 B032 321 Adapter	For hermetic inspection	49 B032 305 Holder, power steering pump	For installation of oil pump
49 G032 317 Hose (Part of 49 B032 3A1)	For hermetic inspection	49 1232 670A Gauge set, power steering	For measurement of fluid pressure
49 1232 673 Valve body (Part of 49 1232 670A)	For measurement of fluid pressure	49 H032 301 Wrench	For removal of tie-rod
49 1232 672 Gauge (Part of 49 1232 670A)	For measurement of fluid pressure	49 B032 304 Adapter	For measurement of fluid pressure
49 H002 671 Adapter	For measurement of fluid pressure	49 G017 5A0 Support, engine	For removal and installation of steering gear

03U0NX-805

Downloaded from www.Manualslib.com manuals search engine

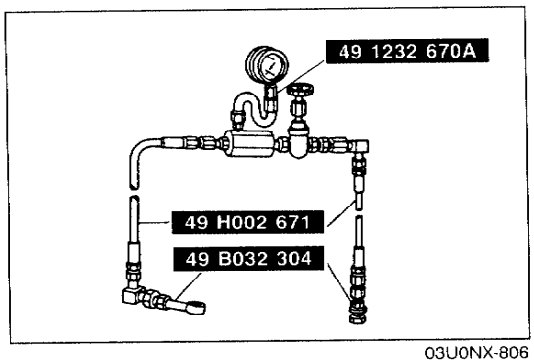

03U0NX-806

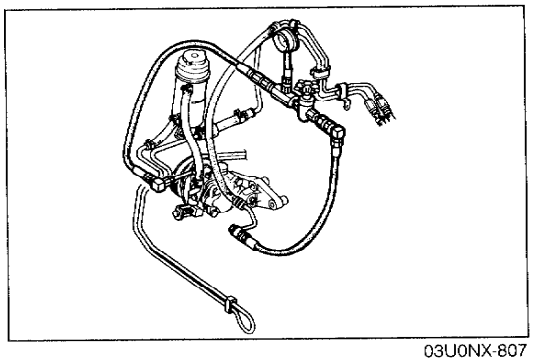

03U0NX-807

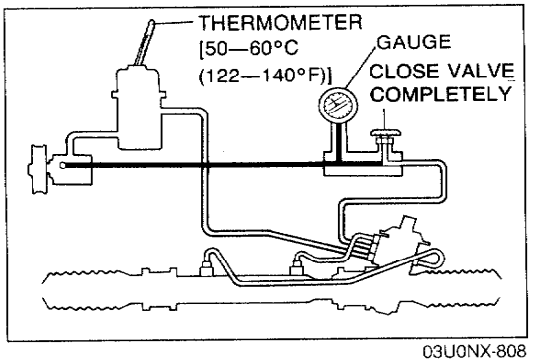

03U0NX-808

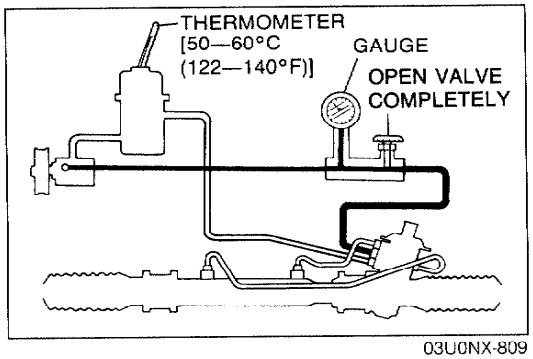

03U0NX-809

POWER STEERING FLUID

Inspection

Fluid pressure

1. Assemble the **SST** as shown in the figure.

Tightening torque:
39—49 N·m (4.0—5.0 m-kg, 29—36 ft-lb)

Note
- **Before disconnecting the hose, make marks at the connections for proper reinstallation.**

2. Disconnect the high-pressure hose from the oil pump. Attach the **SST**.
3. Bleed air from the system.
4. Open the gauge valve fully. Start the engine and turn the steering wheel fully left and right to raise the fluid temperature to **50—60°C (122—140°F)**.

5. Close the gauge valve completely. Increase the engine speed to **1,000—1,500 rpm** and measure the fluid pressure generated by the oil pump. If the pressure is below specification, replace the oil pump assembly.

Oil pump fluid pressure:
7,848 kPa (80 kg/cm^2, 1,137 psi)

Caution
- **If the valve is left closed for more than 15 seconds, the fluid temperature will increase excessively and adversely affect the oil pump.**

6. Open the gauge valve fully again and increase the engine speed to **1,000—1,500 rpm**.
7. Turn the steering wheel fully to the left and right and measure the fluid pressure generated by the gear housing. If the pressure is below specification, replace the gear housing assembly.

Gear housing fluid pressure:
7,848 kPa (80 kg/cm^2, 1,137 psi)

Caution
- **If the steering wheel is kept in the fully turned position for more than 15 seconds, the fluid temperature will rise excessively.**

8. Remove the gauge set. Install and tighten the high-pressure hose to the specified torque.

Tightening torque:
16—24 N·m (1.6—2.4 m-kg, 12—17 ft-lb)

9. Bleed air from the system.

03U0NX-810

Downloaded from www.Manualslib.com manuals search engine

STEERING GEAR AND LINKAGE

Removal / Installation

1. Loosen the wheel lug nuts.
2. Jack up the front of the vehicle and support it with safety stands.
3. Remove the wheels.
4. Remove the battery and the battery tray.
5. Remove the undercover.
6. Remove in the order shown in the figure, referring to **Removal Note**.
7. Install in the reverse order of removal, referring to **Installation Note**.
8. After installation, bleed air from the steering system.

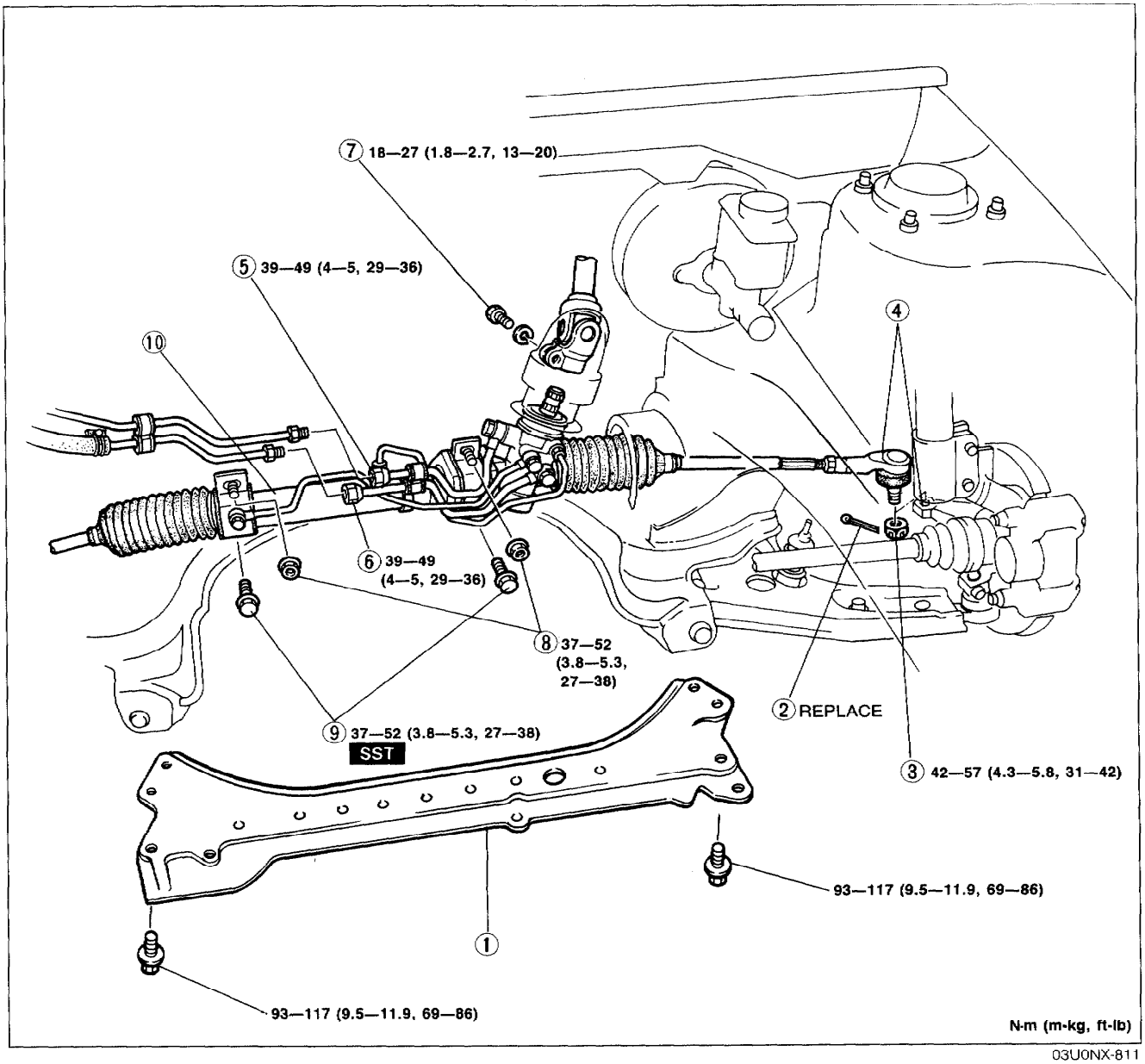

03U0NX-811

1. Crossmember
2. Cotter pin
3. Nut
4. Tie-rod end/Steering knuckle
5. Pressure pipe
6. Return pipe
7. Fixing bolt (intermediate shaft/pinion shaft)
8. Nut (Steering gear mounting nut)
9. Bolt (Steering gear mounting bolt)
   Removal note ..... page N– 8
   Installation note ..... page N– 9
10. Steering gear and linkage
    Disassembly / Inspection / Assembly
    ..... page N–10

Downloaded from www.Manualslib.com manuals search engine

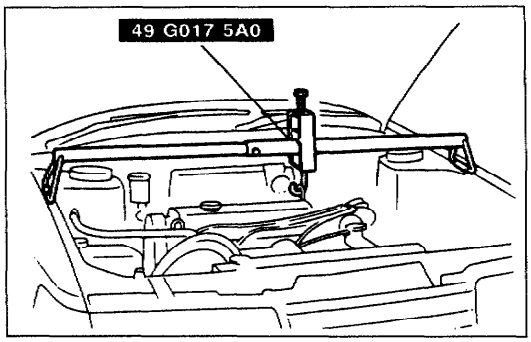

03U0NX-812

Removal note
Bolt (Steering gear mounting bolt)
1. Set the **SST** as shown.

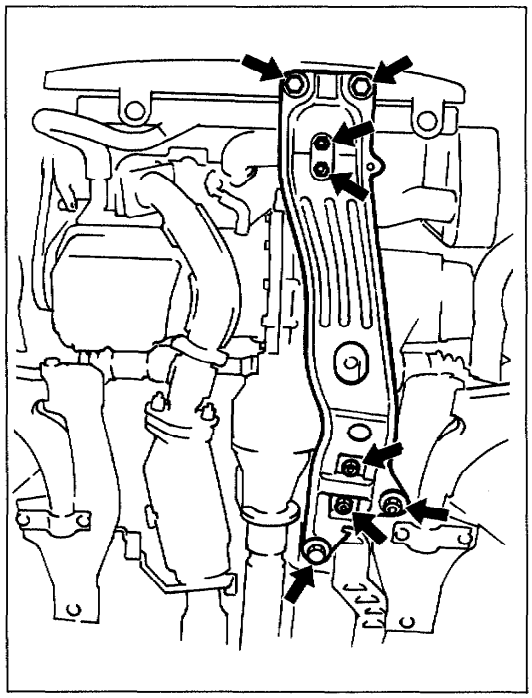

03U0NX-813

2. Remove the No.1 and No.2 engine mount nuts.
3. Remove the engine mount member.

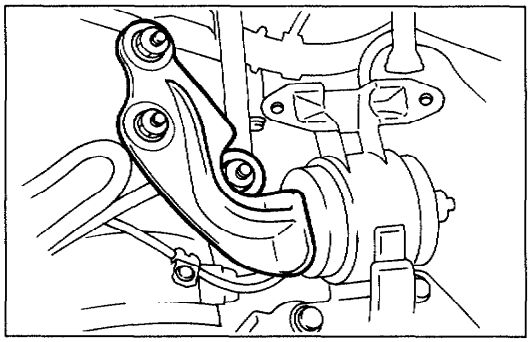

03U0NX-814

4. Remove the No.4 engine mount mounting bolts.

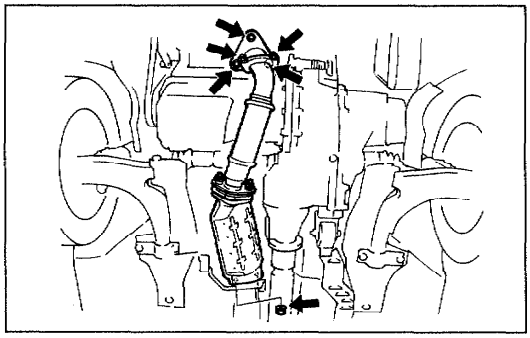

03U0NX-815

5. Remove the front exhaust pipe and the catalytic converter together.

Downloaded from www.Manualslib.com manuals search engine

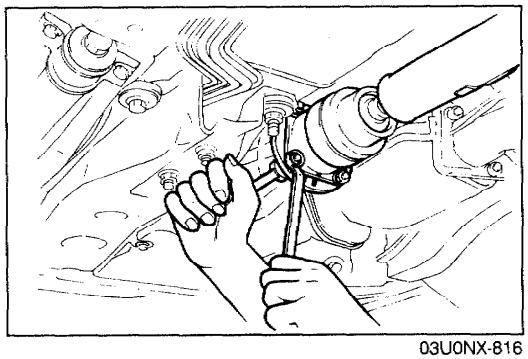

03U0NX-816

6. Separate the front of propeller shaft.

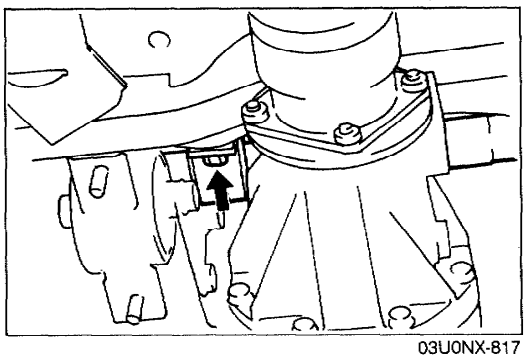

03U0NX-817

7. Lower the engine gradually until the lower left mounting bolt can be removed.

Caution
- **Do not lower the engine too much because it will damage the front left driveshaft boolt.**

8. Remove the lower left mounting bolt.

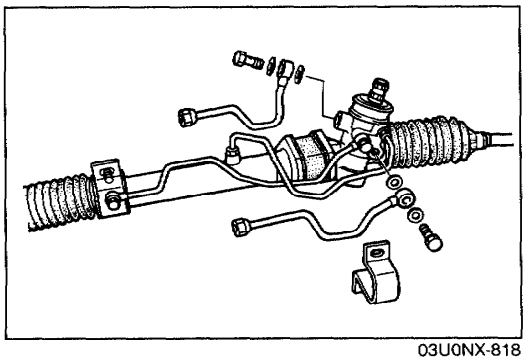

03U0NX-818

9. Remove the pressure pipe and the return pipe.
10. Remove the left bracket.
11. Pull the steering gear from the left side to remove it.

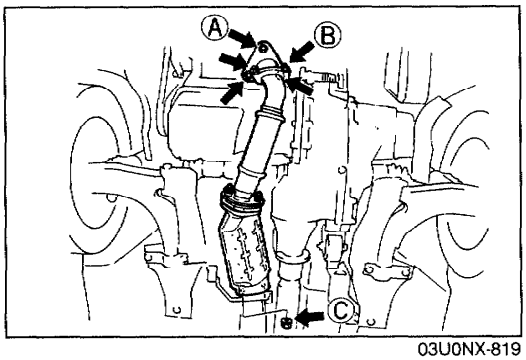

03U0NX-819

Installation note
Bolt (Steering gear mounting bolt)

Tightening torque:
Pressure pipe (O-ring replace):
29—39 (3—4, 22—29)
Return pipe (O-ring replace):
29—39 (3—4, 22—29)
Propeller shaft (Refer to Section L):
27—30 (2.8—3.1, 20—22)
Exhaust pipe (Gasket replace)
A: 31—46 (3.2—4.7, 23—34)
B: 21—27 (2.1—2.8, 15—20)
C: 40—55 (4.1—5.6, 30—41)
No.4 engine mount: 67—93 (6.8—9.5, 49—69)
Engine mount member: 64—89 (6.5—9.1, 47—66)
No.1 and No.2 engine mount nut:
37—52 (3.8—5.3, 27—38)

N·m (m-kg, ft-lb)

Downloaded from www.Manualslib.com manuals search engine

Disassembly / Inspection / Assembly

1. Disassemble in the order shown in the figure, referring to **Disassembly Note**.
2. Inspect all parts and repair or replace as necessary.
3. Assemble in the reverse order of disassembly, referring to **Assembly Note**.

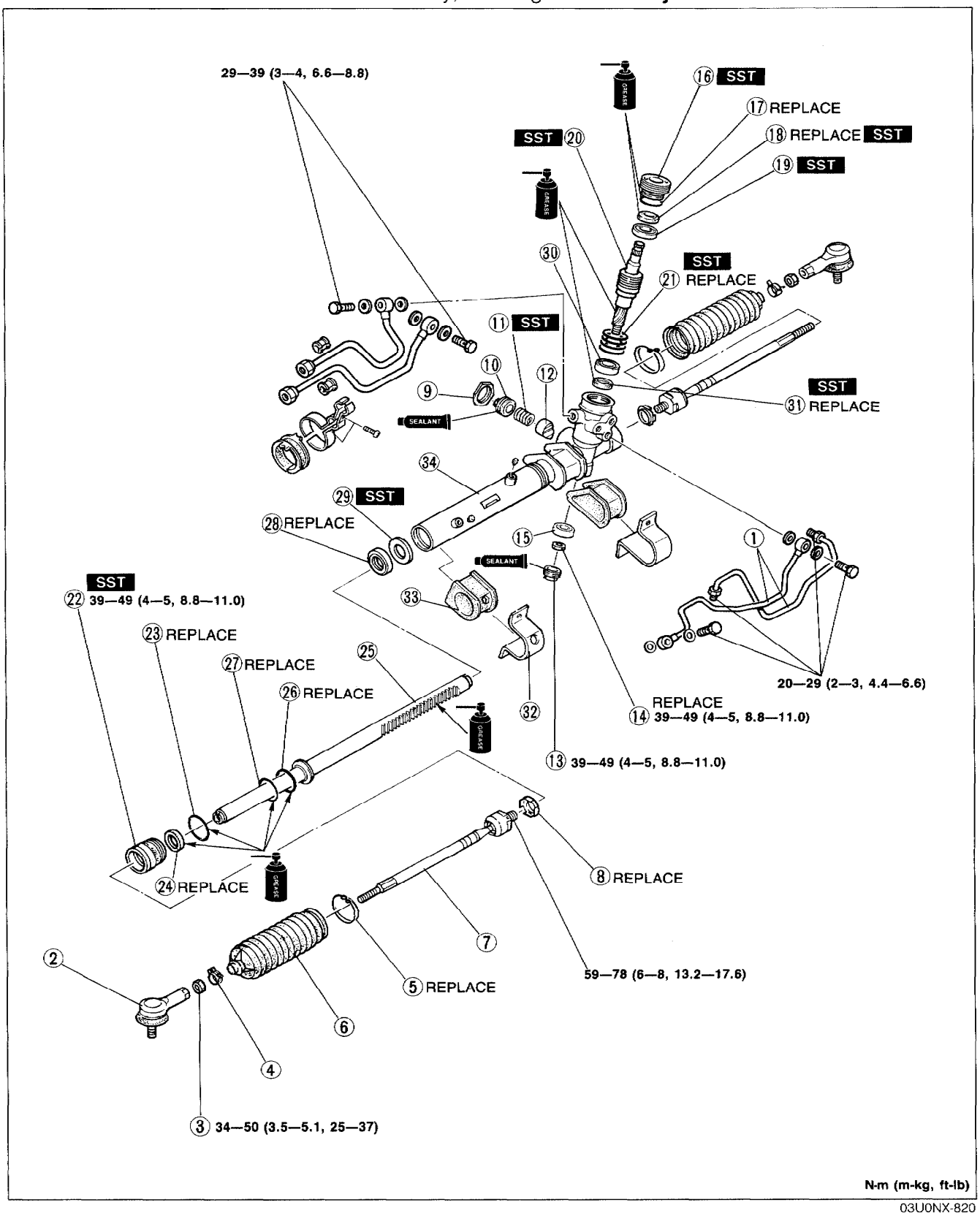

03U0NX-820

Downloaded from www.Manualslib.com manuals search engine

1. Oil pipe
   Disassembly note..... page N–12
2. Tie-rod end
3. Locknut
4. Boot band
5. Boot wire
6. Boot
7. Tie-rod
   Disassembly note..... page N–12
   Inspect for damage
   Inspect operation of ball joint
8. Washer
9. Locknut
   Disassembly note..... page N–12
10. Adjusting cover
    Assembly note ..... page N–16
11. Spring
12. Support yoke
13. Housing cover
    Disassembly note..... page N–12
14. Locknut
15. Bearing
    Inspect for wear and operation
16. Plug
    Disassembly note..... page N–12
    Inspection..... page N–14
    Assembly note ..... page N–15
17. O-ring
18. Oil seal
    Disassembly note..... page N–13
19. Bearing
    Disassembly note..... page N–13
    Inspect for wear and operation
20. Pinion shaft assembly
    Inspect for damage and wear
21. Seal ring
    Assembly note ..... page N–15
22. Outer box assembly
    Disassembly note..... page N–13
    Assembly note ..... page N–14
23. O-ring
24. U-gasket
25. Steering rack
    Inspection..... page N–14
    Assembly note ..... page N–14
26. Seal ring
27. O-ring
28. Oil seal
    Disassembly note..... page N–13
29. Inner guide
    Disassembly note..... page N–13
30. Bearing
    Inspect for wear and operation
31. Oil seal
    Assembly note ..... page N–15
32. Mounting bracket
33. Mounting rubber
34. Gear box
    Inspect for damage and crack

03U0NX-821

Downloaded from www.Manualslib.com manuals search engine

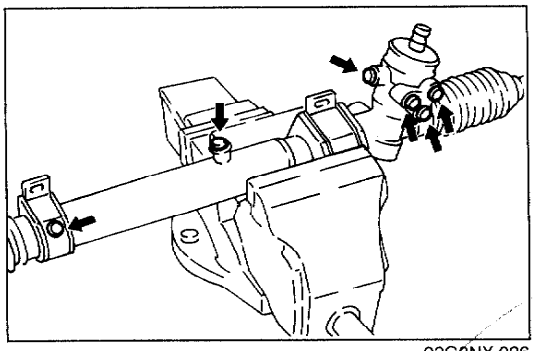

93G0NX-026

Disassembly note
Oil pipe

Caution
- **After disconnecting the pipes, use a plug or adhesive type tape to seal each port to prevent the entry of foreign materials.**

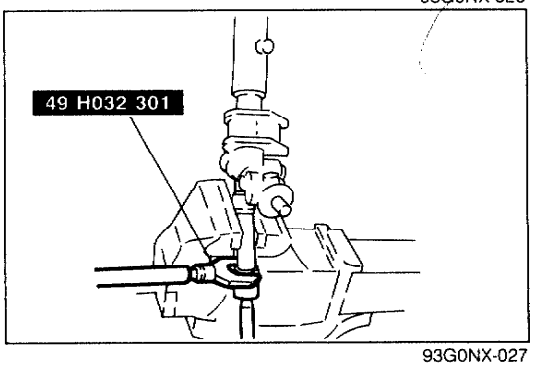

93G0NX-027

Tie-rod
1. Use the **SST** to remove the tir-rod.

Caution
- **To avoid scratching the rack, secure the rack in a vise protected with brass pads or cloth.**

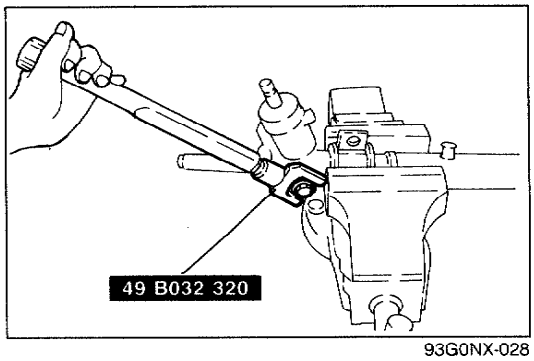

93G0NX-028

Locknut
1. Use the **SST** to remove the locknut.

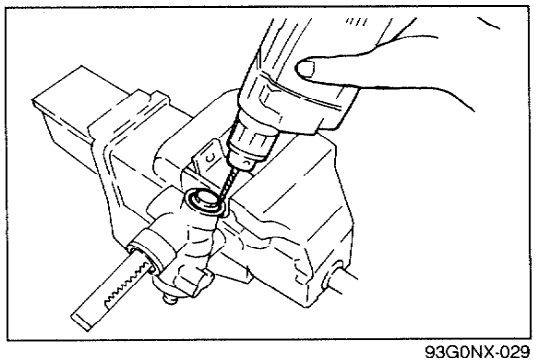

93G0NX-029

Housing cover
1. Use a drill (ϕ1.5mm (0.06 in)) to make a recessed area (approx. 1.5mm (0.06 in)) at the punch-crimped part of the threaded part.

Caution
- **If the drill diameter and/or the depth of the recess are excessive, the threads will be too loose when the plug is reused.**

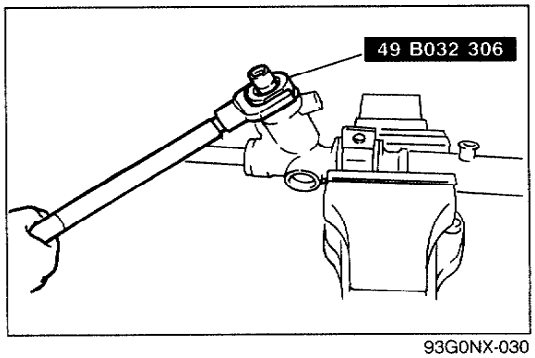

93G0NX-030

Plug
1. Use the **SST** to remove the plug.

Downloaded from www.Manualslib.com manuals search engine

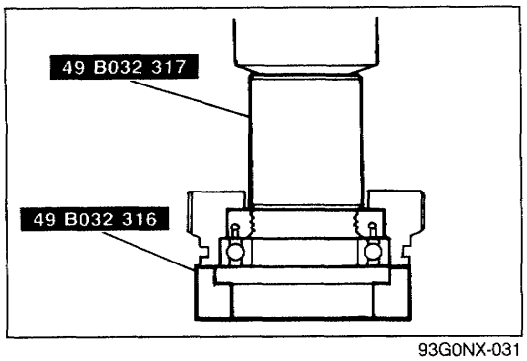

93G0NX-031

Oil seal and bearing

1. Use the **SST** to remove the bearing and the oil seal from the plug.

Caution

- **The oil seal can not be reused.**

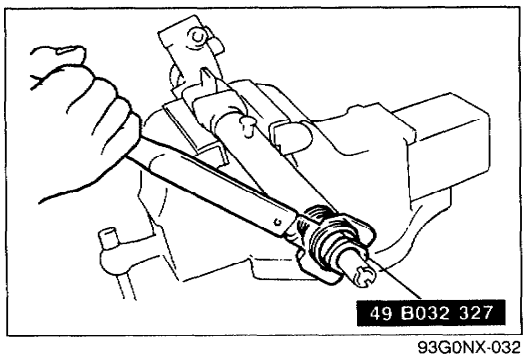

93G0NX-032

Outer box assembly

1. Use the **SST** to remove the outer box.

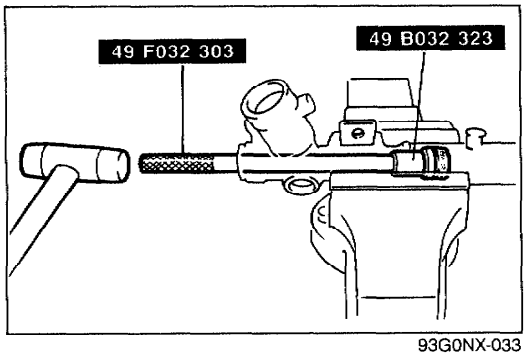

93G0NX-033

Oil seal and inner guide

1. Use the **SST** to remove the oil seal and inner guide toward the cylinder side.

Caution

- **The oil seal can not be reused.**

Downloaded from www.Manualslib.com manuals search engine

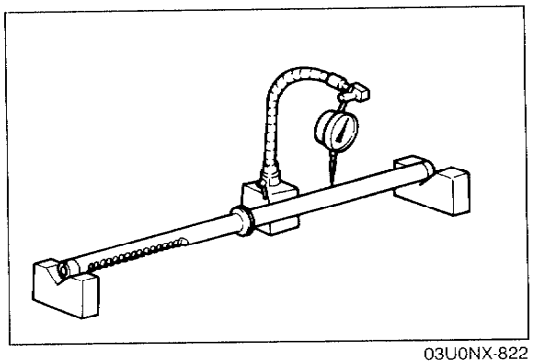

03U0NX-822

Inspection

Steering rack

1. Check the rack for cracking or other damage or for abnormal wear of the teeth; replace it if necessary.
2. Check the seal ring installation part of the rack for abnormal wear or damage; replace it if necessary.
3. Use V blocks to support both ends of the large-diameter part of the rack; check for excessive bending; replace it if necessary.

Bending limit: 0.15mm (0.006 in) (near rack center)

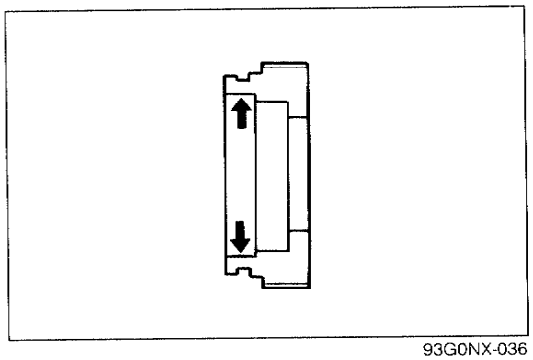

93G0NX-036

Plug

1. Check for scratches or other damage at the oil seal installation inner diameter; replace it if necessary.

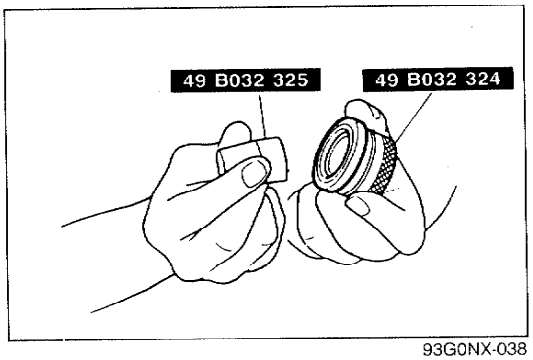

93G0NX-038

Assembly note

Note

- **With the oil seal, inner guide, steering rack and outer box installed to the gear box, check to confirm the air-tightness of the cylinder part of the gear box.**

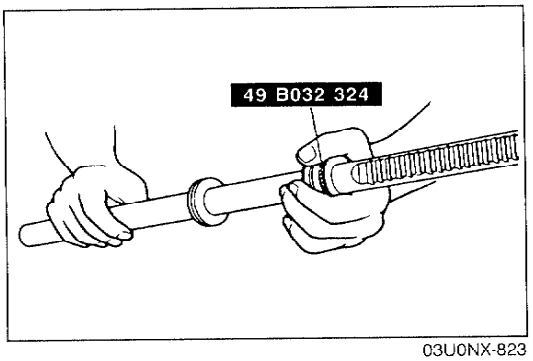

03U0NX-823

Steering rack

1. Install a new oil seal and new seal ring to the rack's piston.
2. After installing the seal ring, seat it properly at the piston circumference.
3. Install the oil seal and inner guide to the **SST**.
4. Using the **SST**, place the oil seal and inner, guide at the edge of the steering rack's pinion.
5. After mounting the steering rack to the gear box, use a press to install the oil seal and inner guide to the corrcet position.

Caution

- **When pressing in, do not apply a load pressure of more than 29,430 kPa (300 kg/cm^2, 4,266 psi), because to do so will damage the oil seal and inner guide.**
- **Apply grease to the seal ring, oil seal and inner guide.**

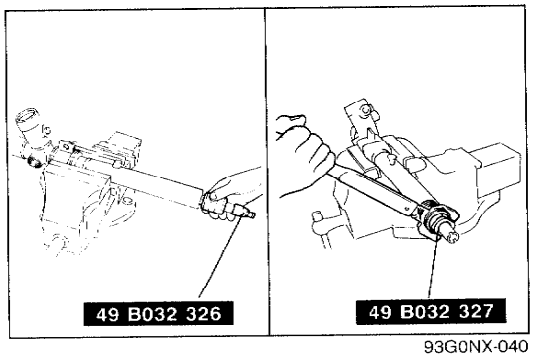

93G0NX-040

Outer box assembly

1. After installing the **SST** to the rack, install the outer box, and use the **SST** to tighten.

Downloaded from www.Manualslib.com manuals search engine

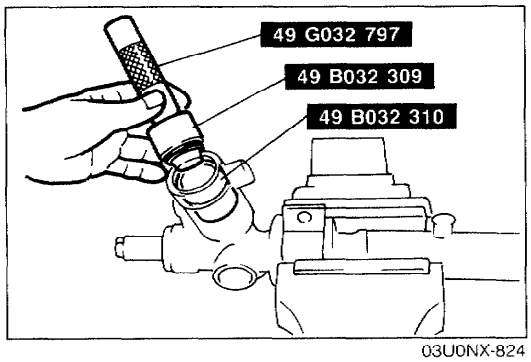

03U0NX-824

Oil seal

1. Use the **SST** to install a new oil seal to the gear housing.

Note
- **Apply grease to the oil seal.**

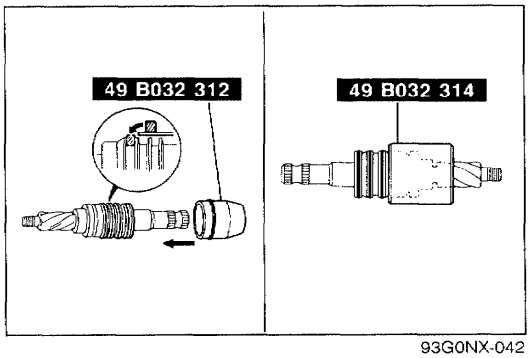

93G0NX-042

Seal ring

1. Use the **SST** to install a new seal ring to the valve part of the pinion shaft.
2. After installing it, use the **SST** to seat it properly.

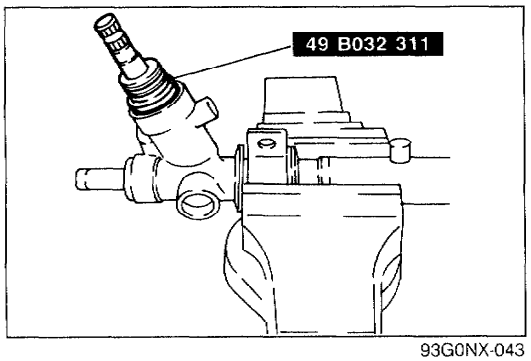

93G0NX-043

3. Use the **SST** to install the pinion shaft assembly to the gear housing.

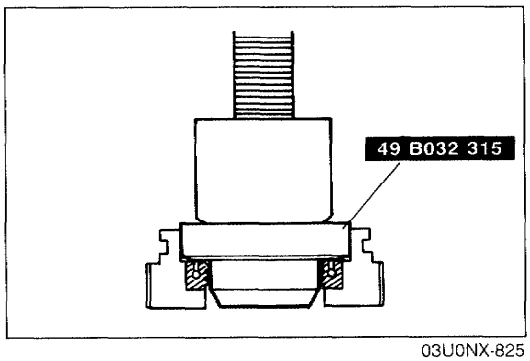

03U0NX-825

Plug

1. Use the **SST** to press in a new oil seal.
2. Press in by placing the flat plate against the bearing.

Caution
- **Apply grease to the oil seal and bearing.**

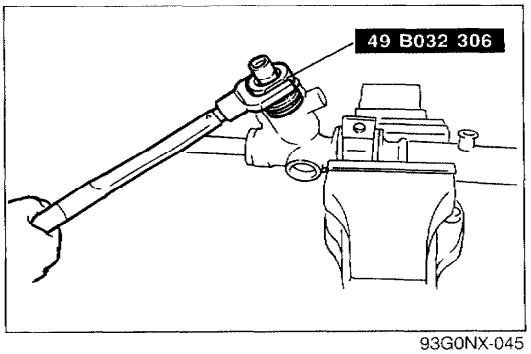

93G0NX-045

3. Use the **SST** to tighten the plug to the gear housing.

Downloaded from www.Manualslib.com manuals search engine

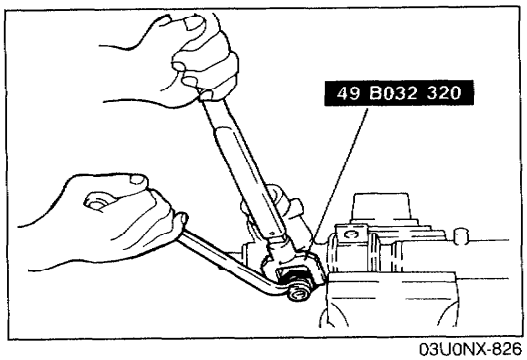

03U0NX-826

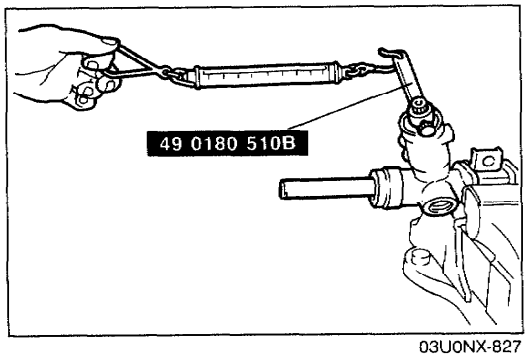

03U0NX-827

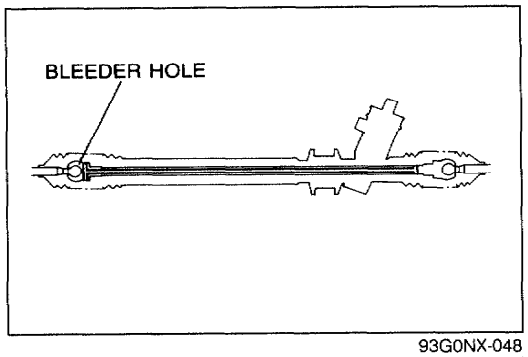

93G0NX-048

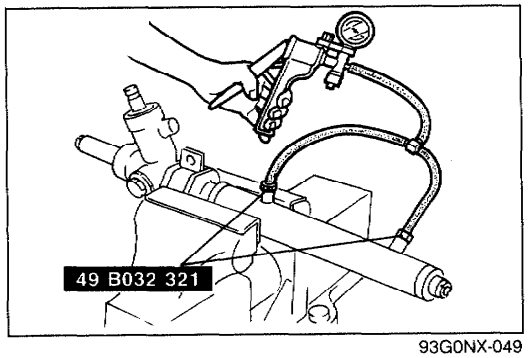

93G0NX-049

Adjusting cover

1. Apply sealant to the adjusting cover and temporarily tighten it to a torque of **11 N·m (110 cm-kg, 95 in-lb)**.
2. Move the rack back and forth **approx. 3 times** and loosen the adjusting cover.
3. Retighten the adjusting cover to the specified torque and then loosen it **0—40°**.

Tightening torque:
4.4—5.4 N·m (45—55 cm-kg, 39—48 in-lb)

4. Tighten the locknut with the **SST**.
5. Measure the pinion starting torque with the **SST** and a pull scale.

Starting torque:
At ± 90° from the straight-ahead position:
1.0—1.3 N·m (10—14 cm-kg, 8.7—12 in-lb)
(Pull scale reading: 1.0—1.4 kg)
At other position:
1.6 N·m (17 cm-kg, 14.7 in-lb) max.
(Pull scale reading: 1.7 kg max.)

6. If not as specified, repeat Steps 3 to 5.

Tie-rod

Note
- **Install the tie-rod (with air bled out) at the rack housing side.**

Cylinder air-tighteness check

1. Install the **SST** to the cylinder part of the gear housing.
2. Using a vacuum pump, apply a vacuum of 400 mmHg and check to be sure that the vacuum is maintained for 30 seconds.
3. If there is any leakage, replace the oil seal.

Downloaded from www.Manualslib.com manuals search engine

POWER STEERING OIL PUMP

Disassembly / Inspection / Assembly

1. The following procedures show replacement of the O-rings. If a problem is found in other parts, replace the oil pump assembly.
2. Disassemble in the order shown in the figure, referring to **Disassembly Note**.
3. Inspect all parts and repair or replace as necessary.
4. Assemble in the reverse order of disassembly, referring to **Assembly Note**.

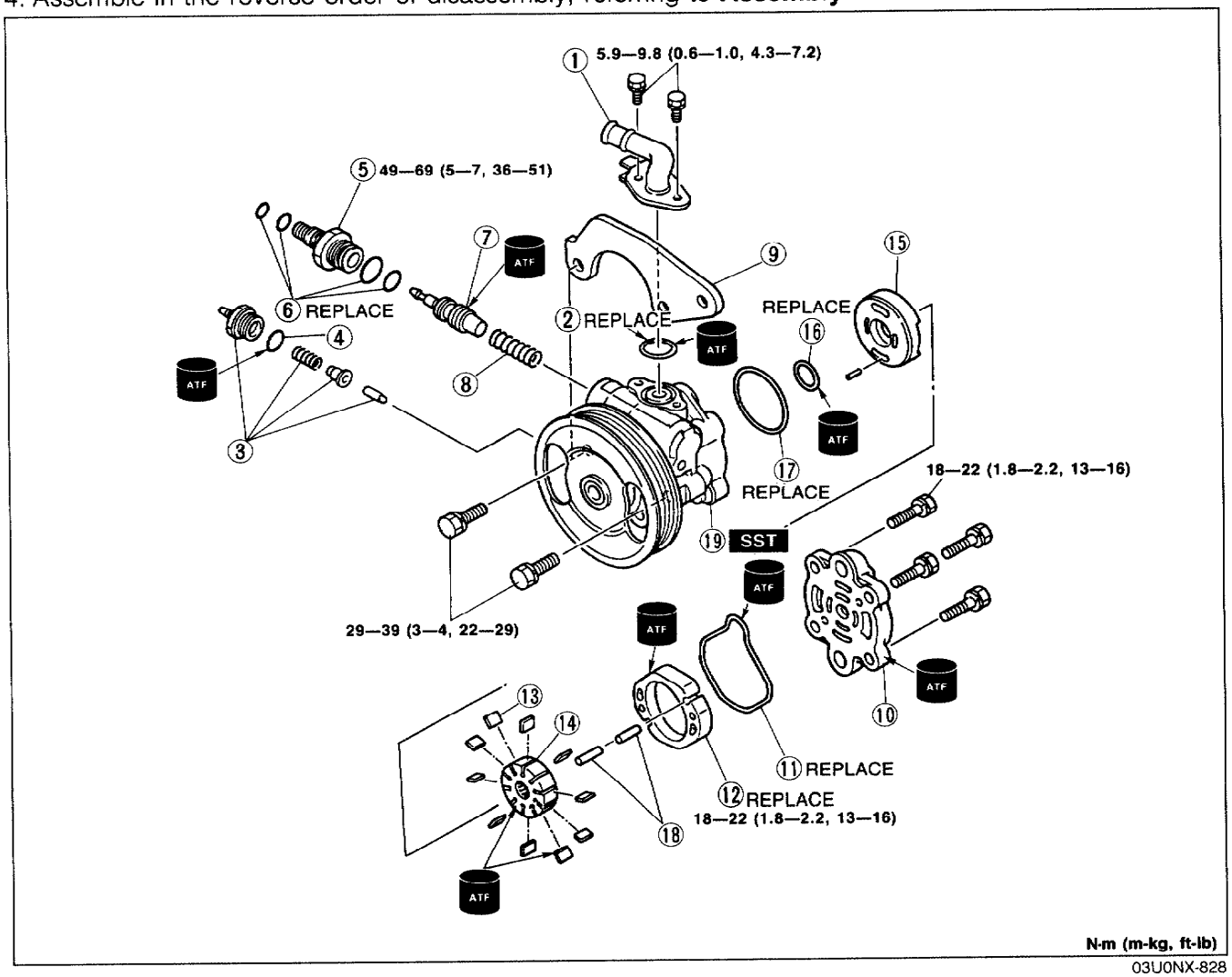

03U0NX-828

1. Suction pipe
2. O-ring
3. Pressure-switch assembly
4. O-ring
5. Connector
6. O-ring
7. Control valve
   Inspect for damage and wear
8. Spring
   Inspect for damage
9. Bracket
10. Pump body (rear)
    Inspect for damage and wear
11. O-ring
12. Cam ring
    Inspect for damage and wear
    Assembly note ..... page N–17
13. Vane
    Inspect for damage and wear
    Assembly note ..... page N–17
14. Rotor
    Inspect for damage and wear
    Assembly note ..... page N–17
15. Side plate
    Inspect for damage and wear
16. O-ring
17. O-ring
18. Pin
19. Pump body (front)
    Inspect for damage and wear

Downloaded from www.Manualslib.com manuals search engine

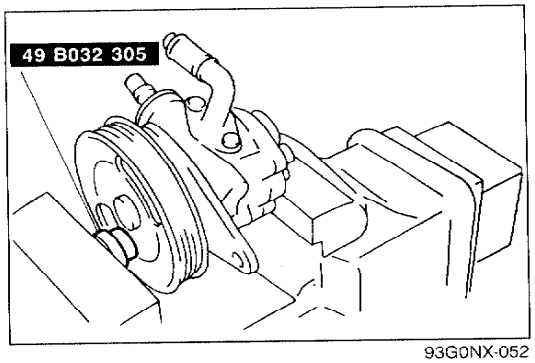

93G0NX-052

Disassembly note

Oil pump

Note

- **As shown in the figure, when securring the oil pump in a vise, be sure to use the SST so that force is not applied to the pulley or shaft.**

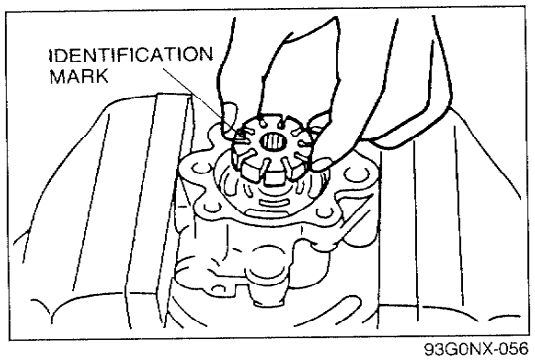

93G0NX-056

Assembly note

Rotor

1. Install the rotor to the shaft with the rotor's identification mark facing upward.

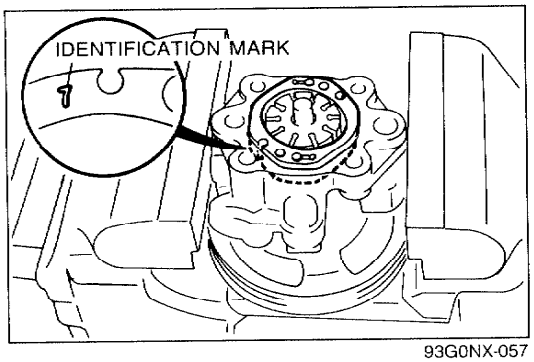

93G0NX-057

Cam ring

1. Install the cam ring so that its identification mark is facing downward.

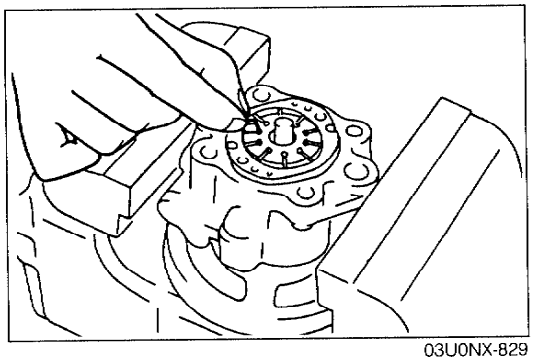

03U0NX-829

Vane

1. Install the vanes (10 pieces) to the rotor, with the R part of the vanes facing outward.

Downloaded from www.Manualslib.com manuals search engine

BRAKING SYSTEM

INDEX ..... **P– 2**

FEATURES

OUTLINE ..... **P– 3**
OUTLINE OF CONSTRUCTION ..... **P– 3**
SPECIFICATIONS ..... **P– 3**

SERVICE

SUPPLEMENTAL SERVICE INFORMATION .. **P– 4**
CONVENTIONAL BRAKE SYSTEM ..... **P– 4**
DUAL PROPORTIONING VALVE ..... **P– 4**

03U0PX-801

Downloaded from www.Manualslib.com manuals search engine

INDEX

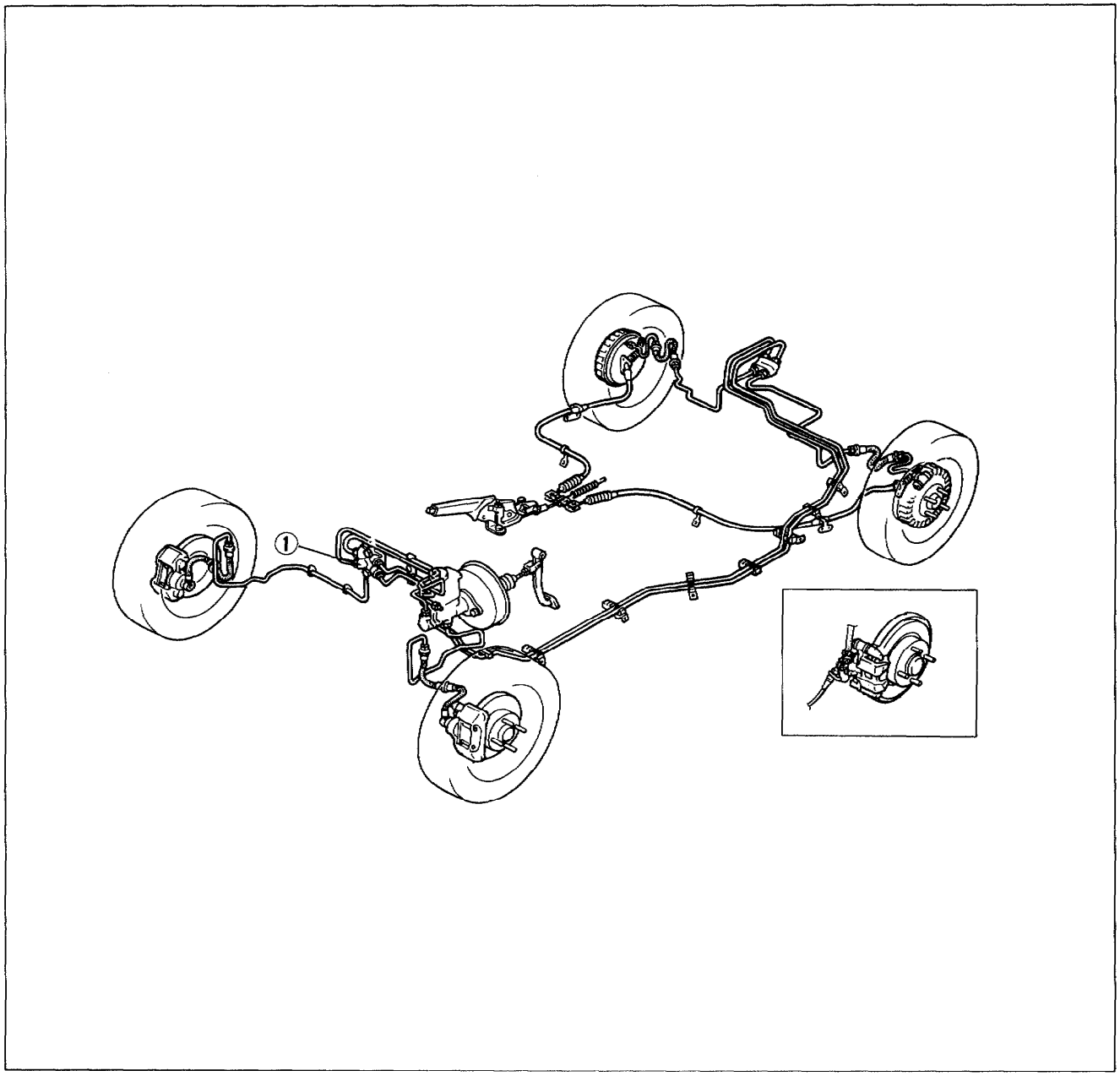

03U0PX-802

1. Dual proportioning valve
   Inspection ..... page P–4

Downloaded from www.Manualslib.com manuals search engine

OUTLINE

OUTLINE OF CONSTRUCTION

The braking system is mostly unchanged however, the dual proportioning valve is changed on 4-wheel drive models. Other parts are basically the same as the previous models.

03U0PX-803

SPECIFICATIONS

Item			5MTX	4ATX
Brake pedal	Type		Suspended	
	Pedal lever ratio		4.2	
	Maximum stroke	mm (in)	131 (5.16)	
Master cylinder	Type		Tandem (with level sensor)	
	Cylinder bore	mm (in)	22.22 (0.875)	
Power brake unit	Type		Single diaphragm	
	Diameter	mm (in)	214 (8.43)	239 (9.41)
Front disc brake	Type		Ventilated disc	
	Cylinder bore	mm (in)	53.97 (2.12)	
	Pad dimensions (Area x Thickness)	mm^2 x mm (in^2 x in)	4,300 (6.66) x 10 (0.39)	
	Disc plate dimensions (Outer diameter x Thickness)	mm (in)	257 x 22 (10.12 x 0.87)	
Rear disc brake	Type		Solid disc	
	Cylinder bore	mm (in)	30.2 (1.19)	
	Pad dimensions (Area x Thickness)	mm^2 x mm (in^2 x in)	2,600 (4.03) x 7.5 (0.30)	
	Disc plate dimensions (Outer diameter x Thickness)	mm x in	251 x 9 (9.88 x 0.35)	
Braking force control device			Dual proportioning valve	
Parking brake			Center lever (Mechanical, two rear brakes)	
Brake fluid			FMVSS 116: DOT-3 SAE: J1703	

03U0PX-804

Downloaded from www.Manualslib.com manuals search engine

SUPPLEMENTAL SERVICE INFORMATION

The point shown in this section is comparison with workshop manual (1195-10-89E)

Dual proportioning valve
- Inspection

03U0PX-805

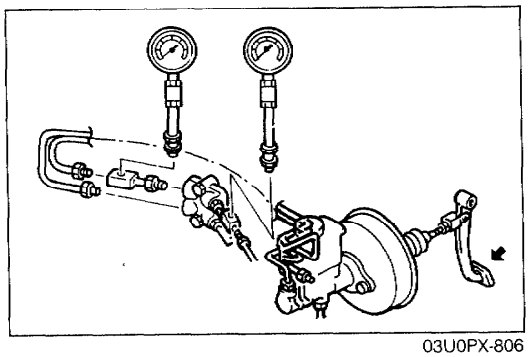

03U0PX-806

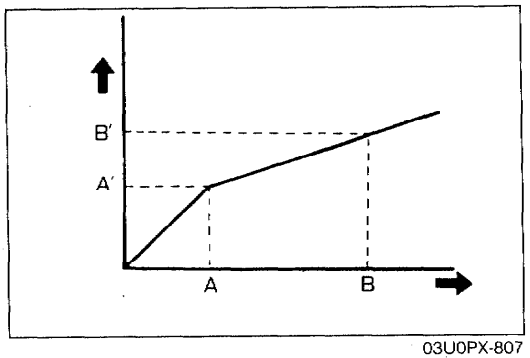

03U0PX-807

CONVENTIONAL BRAKE SYSTEM

DUAL PROPORTIONING VALVE

Inspection

1. Connect two pressure gauges (9,810 kPa [100 kg/cm^2, 1,422 psi]) to the brake pipes with adapters as shown in the figure.

   Adapter and flare nut tightening torque:
   13—22 N·m (1.3—2.2 m-kg, 9.4—16 ft-lb)

   Note
   - **Disconnect and connect the brake pipes with SST.**

2. Bleed the air from the brake system.
3. Depress the brake pedal until the master cylinder pressure equals A; then record rear brake pressure A'.
4. Depress the brake pedal again, apply additional pressure until the pressure equals B; then record pressure B'.

Fluid pressure

kPa (kg/cm^2, psi)

A	A'	B	B'
2,943 (30, 427)	2,943 (30, 427) ± 196 (2, 28)	5,886 (60, 853)	3,826 (39, 555) ± 294

Downloaded from www.Manualslib.com manuals search engine

SUSPENSION

INDEX ..... **R– 2**
OUTLINE ..... **R– 4**
SPECIFICATIONS ..... **R– 4**
TROUBLESHOOTING GUIDE ..... **R– 5**
WHEEL ALIGNMENT ..... **R– 6**
PRE-INSPECTION ..... **R– 6**
FRONT WHEEL ALIGNMENT ..... **R– 6**
REAR WHEEL ALIGNMENT ..... **R– 8**
FRONT SUSPENSION (STRUT) ..... **R– 9**
PREPARATION ..... **R– 9**
FRONT SHOCK ABSORBER AND SPRING .. **R–10**
FRONT LOWER ARM **R–15**
FRONT STABILIZER **R–17**
REAR SUSPENSION (STRUT) **R–19**
PREPARATION **R–19**
REAR SHOCK ABSORBER AND SPRING **R–20**
LATERAL LINK AND TRAILING LINK **R–25**

03U0RX-001

Downloaded from www.Manualslib.com manuals search engine

INDEX

FRONT SUSPENSION

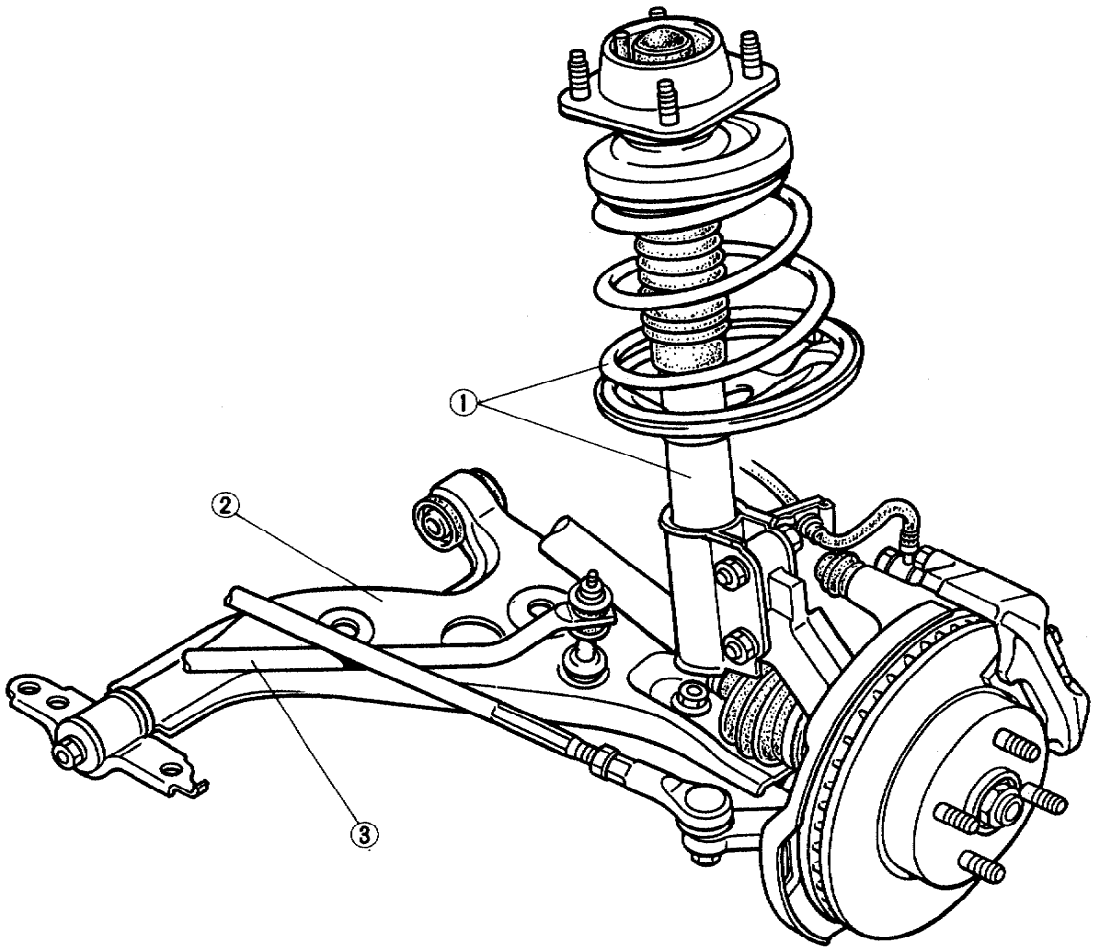

FRONT WHEEL ALIGNMENT

MAXIMUM STEERING ANGLE: 40°00' ± 2° (Inner) 33°00' ± 2° (Outer)

TOTAL TOE-IN: 2 ± 3mm (0.08 ± 0.12 in)
0.2° ± 0.3°

CAMBER: –0°05' ± 45'

CASTER: 1°55' ± 55'

03U0RX-002

1. Front shock absorber and spring
Removal / Installation ..... page R–10
Disassembly / Inspection ..... page R–11
Inspection ..... page R–12
Assembly ..... page R–13

2. Front lower arm
Removal / Inspection / Installation page R–15
Inspection ..... page R–16

3. Front stabilizer
Removal / Inspection / Installation page R–17

Downloaded from www.Manualslib.com manuals search engine

REAR SUSPENSION

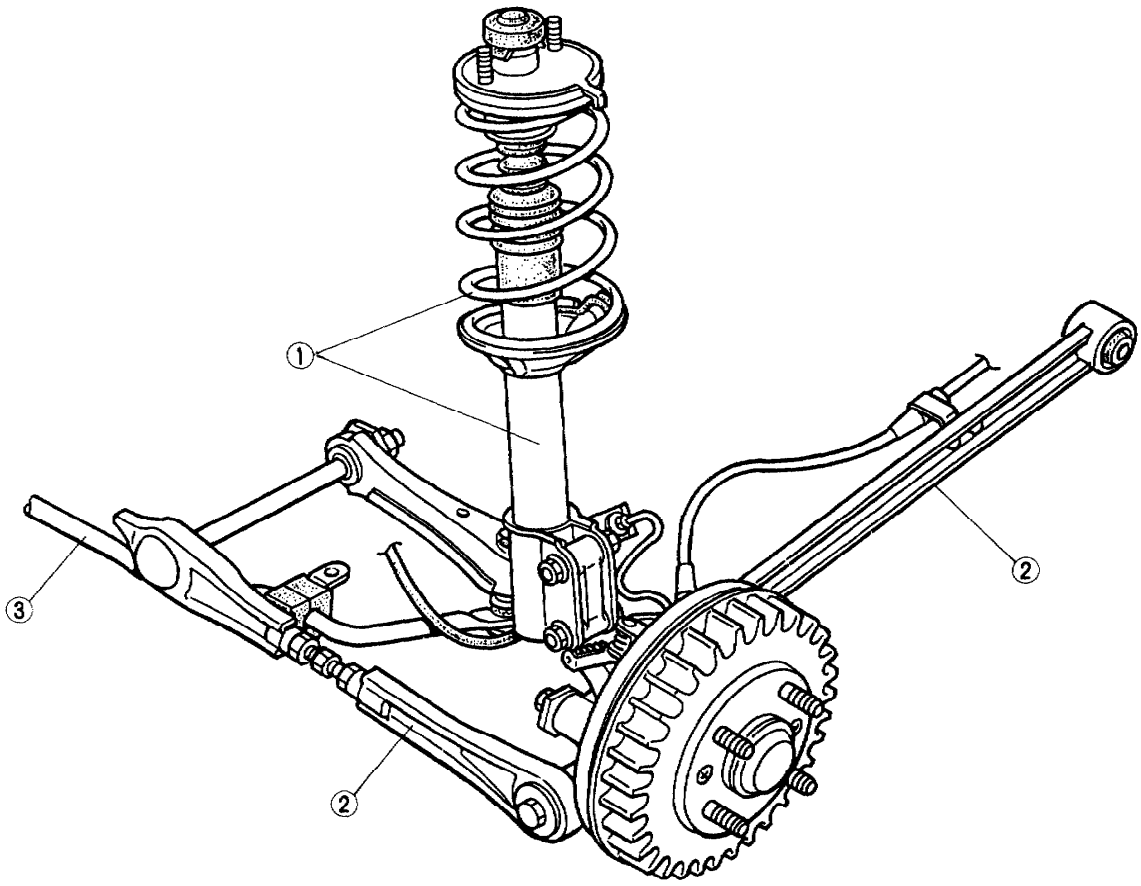

REAR WHEEL ALIGNMENT

TOTAL TOE-IN: 2 ± 3mm (0.08 ± 0.12 in)
0.2° ± 0.3°

CAMBER: –0°20' ± 45'

03U0RX-003

1. Rear shock absorber and spring
Removal / Installation ..... page R–20
Disassembly / Inspection ..... page R–21
Inspection ..... page R–22
Assembly ..... page R–23

2. Lateral link and trailing link
Removal / Inspection / Installation page R–25

3. Rear stabilizer
Removal / Inspection / Installation page R–26

Downloaded from www.Manualslib.com manuals search engine

OUTLINE

SPECIFICATIONS

Item				Specification
Suspension type				
Shock absorber	Suspension			Double-acting, oil-filled
Coil spring	Type	Front		Taper wound
		Rear		Straight wound
	Dimension			See coil spring specification below
Stabilizer	Type			Torsion bar
	Diameter mm (in)	BP SOHC	Front	19.1 (0.75)
			Rear	20.0 (0.79)
		BP DOHC	Front	22.0 (0.87)
			Rear	20.0 (0.79)
		B6 SOHC	Front	—
			Rear	20.0 (0.79)
Wheel alignment (*1Unladen)	Front	Maximum steering angle	Inner	40° ± 2°
			Outer	33° ± 2°
		Total toe-in	mm (in)	2 ± 3 (0.08 ± 0.12)
			degree	0.2° ± 0.3°
		Camber angle		–0°05' ± 45'
		Caster angle		1°55' ± 55'
		Kingpin angle		12°25'
	Rear	Total toe-in	mm (in)	2 ± 3 (0.08 ± 0.12)
			degree	0.2° ± 3°
		Camber angle		–0°20' ± 45'

03U0RX-004

*1 Fuel tank full; radiator coolant and engine oil at specified levels; and spare tire, jack, and tools in designated positions.

Coil Spring Specifications

Item		Wire diameter mm (in)	Coil outer diameter mm (in)	Free length mm (in)	Coil number	Identification mark color	
						M*1	A*2
Front	A	12.7 (0.5)	133–159 (5.24–6.26)	293 (11.54)	3.1	Pink	Yellow
	B	12.9 (0.51)	133–159 (5.24–6.26)	294 (11.57)	3.2	Light green	Yellow
	C	13.2 (0.52)	133–159 (5.24–6.26)	300 (11.81)	3.4	Purple	Yellow
	D	13.3 (0.52)	132–158 (5.20–6.22)	301 (11.85)	3.4	Light blue	Yellow
	E	13.3 (0.52)	132–158 (5.20–6.22)	286 (11.26)	3.2	Orange	Red
	F	13.4 (0.53)	133–159 (5.24–6.26)	287 (11.3)	3.3	Cream	Red
Rear	G	11.6 (0.46)	140 (5.51)	334 (13.15)	4.6	Brown	—
	H	11.9 (0.47)		333 (13.11)	4.7	Gray	—
	I	12.1 (0.48)		332 (13.07)	4.8	Orange	—
	J	11.7 (0.46)		333 (13.11)	4.5	Blue	—
	K	12.3 (0.48)		332 (13.07)	4.9	Blue & White	—
	L	12.5 (0.49)		331 (13.03)	5.1	Blue & Green	—

03U0RX-005

*1 Main identification mark color: Indicated on second coil from bottom.
*2 Auxiliary identification mark color: Indicated on third coil from bottom.

Downloaded from www.Manualslib.com manuals search engine

TROUBLESHOOTING GUIDE

Problem	Possible Cause	Remedy	Page
Body "rolls"	Weak stabilizer Worn or deteriorated stabilizer bushing Worn or deteriorated lower arm bushing Malfunction of shock absorber	Replace Replace Replace Replace	R–17,26 R–17,26 — R–10,20
Poor riding comfort	Weak coil spring Malfunction of shock absorber	Replace Replace	R–11,21 R–10,20
Body leans	Weak coil spring Worn or deteriorated stabilizer bushing Worn or deteriorated lower arm bushing	Replace Replace Replace	R–11,21 R–17,26 —
Abnormal noise from suspension system	Poor lubrication or wear of lower arm ball joint Looseness of peripheral connections Malfunction of shock absorber Worn or deteriorated stabilizer bushing Worn or deteriorated lower arm bushing	Lubricate or replace Tighten Replace Replace Replace	R–15 — R–10,20 R–17,26 —
General driving instability	Weak coil spring Malfunction of shock absorber Worn or deteriorated lower arm bushing Worn or deteriorated stabilizer bushing Improperly adjusted wheel alignment Damaged lower arm ball joint Malfunction of steering system Damaged or unbalanced wheel(s)	Replace Replace Replace Replace Adjust Replace — —	R–11,21 R–10,20 — R–17,26 R– 6 R–15 Section N Section Q
Heavy steering	Poor lubrication or wear of lower arm ball joint Improperly adjusted wheel alignment Malfunction of steering system Damaged or unbalanced wheel(s)	Lubricate or replace Adjust — —	R–15 R– 6 Section N Section Q
Steering wheel pulls to one side	Weak coil spring Worn or deteriorated stabilizer bushing Worn or deteriorated lower arm bushing Damaged lower arm ball joint Improperly adjusted wheel alignment Malfunction of steering system Malfunction of braking system Damaged or unbalanced wheel(s)	Replace Replace Replace Replace Adjust — — —	R–11,21 R–17,26 — R–15 R– 6 Section N Section P Section Q
"Shimmy" occurs (Steering wheel vibrates left/right)	Damaged lower arm ball joint Malfunction of shock absorber Loose shock absorber mounting Worn or deteriorated lower arm bushing Worn or deteriorated stabilizer bushing Improperly adjusted wheel alignment Damaged or worn wheel bearing Malfunction of steering system Damaged or unbalanced wheel(s)	Replace Replace Tighten Replace Replace Adjust Replace — —	R–15 R–10,20 R–10,20 — R–17,26 R– 6 Section M Section N Section Q
Steering wheel doesn't return properly	Stuck or damaged lower arm ball joint Improperly adjusted wheel alignment Malfunction of steering system Damaged or unbalanced wheel(s)	Replace Adjust — —	R–15 R– 6 Section N Section Q

03U0RX-006

Downloaded from www.Manualslib.com manuals search engine

WHEEL ALIGNMENT

PRE-INSPECTION

1. Check the tire inflations and set to the recommended pressure, if necessary.
2. Inspect the front wheel bearing play; replace the bearing if necessary.
3. Inspect the wheel and tire runout.
4. Inspect the ball joints and steering linkage for any excessive looseness.
5. The vehicle must be on level ground and have no luggage or passenger load.
6. The difference in height between the left and right sides from the center of the wheel to the fender brim must not exceed **10mm (0.39 in)**.
7. Shake the vehicle to check operation of the shock absorbers.

03U0RX-007

FRONT WHEEL ALIGNMENT
Specifications

Item				Specification
Wheel alignment (*1Unladen)	Front	Maximum steering angle	Inner	40° ± 2°
			Outer	33° ± 2°
		Total toe-in	mm (in)	2 ± 3 (0.08 ± 0.12)
			degree	0.2° ± 0.3°
		Camber angle		–0°05' ± 45'
		Caster angle		1°55' ± 55'
		Kingpin angle		12°25'

03U0RX-008

*1 Fuel tank full; radiator coolant and engine oil at specified level; and spare tire, jack, and tools in designated positions.

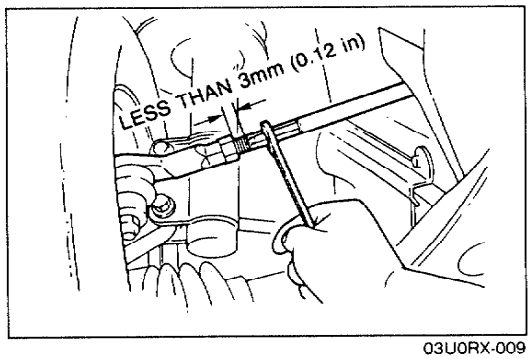

03U0RX-009

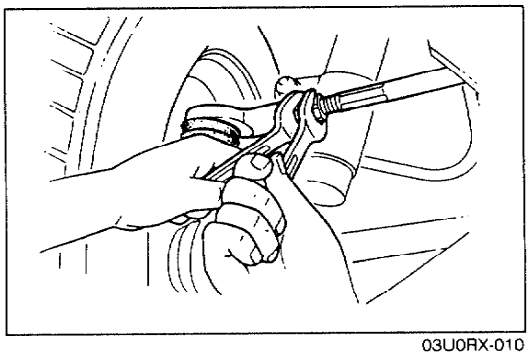

03U0RX-010

Adjustments
Maximum steering angle

1. Loosen the left and right tie-rod locknuts, then turn the tie-rods equally.

   Maximum left/right difference: 3mm (0.12 in)

2. Tighten the tie-rod locknuts.

   Tightening torque:
   34—39 N·m (3.5—4.0 m-kg, 25—29 ft-lb)

3. Adjust the toe-in after adjusting the steering angle.
4. Inspect and adjust the toe-in after adjusting the turning angle.

Downloaded from www.Manualslib.com manuals search engine

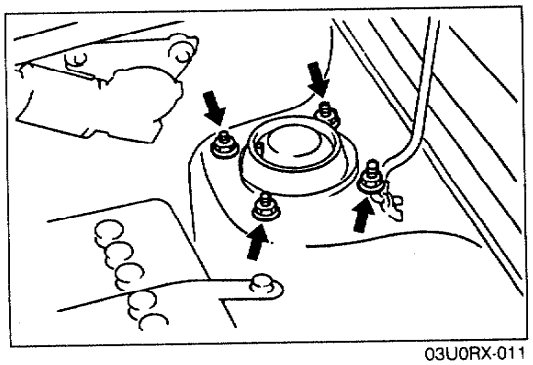

03U0RX-011

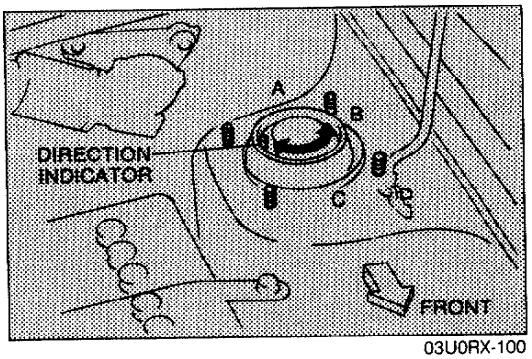

03U0RX-100

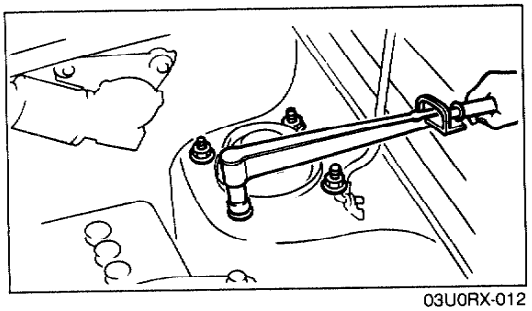

03U0RX-012

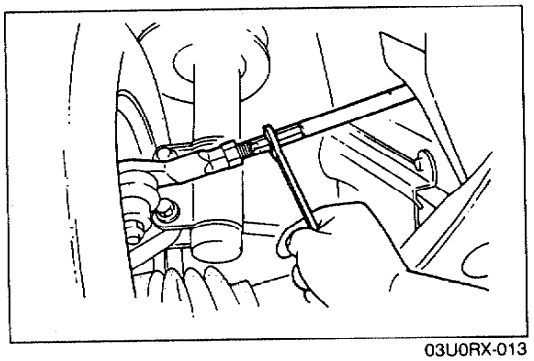

03U0RX-013

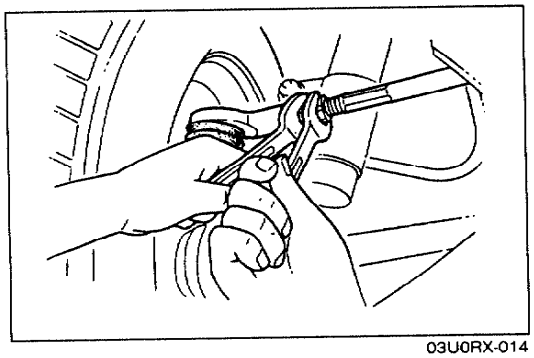

03U0RX-014

Camber and Caster

Note
- **Caster is not adjustable.**

1. Jack up the front of the vehicle and support it with safety stands.
2. Remove the mounting block nuts.

3. Push the mounting block downward, and turn it to the desired position

Direction indicator	Difference from standard position	
	Camber angle	Caster angle
A	+14'	+14'
B	+29'	0°
C	+14'	−14'

4. Install and tighten the mounting nuts to the specified torque.

Tightening torque:
29—40 N·m (3.0—4.1 m-kg, 22—30 ft-lb)

Adjustments

Total toe-in

To adjust the toe-in, loosen the left and right tie-rod locknuts, then turn the tie-rods equally.

Caution
- **The left and right tie-rods are both right threaded, so, to increase the toe-in, turn the right tie-rod toward the front of the vehicle and the left tie-rod equally toward the rear.**
- **One turn of the tie-rod (both sides) changes the toe-in by about 6mm (0.24 in).**

Tighten the tie-rod locknuts.

Tightening torque:
34—39 N·m (3.5—4.0 m-kg, 25—29 ft-lb)

Downloaded from www.Manualslib.com manuals search engine

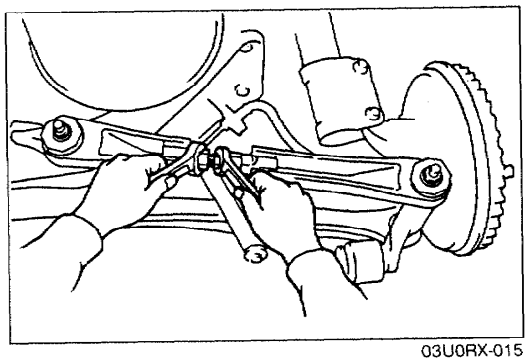

03U0RX-015

REAR WHEEL ALIGNMENT

Adjustment

Total toe-in

1. Loosen the lateral link locknuts.

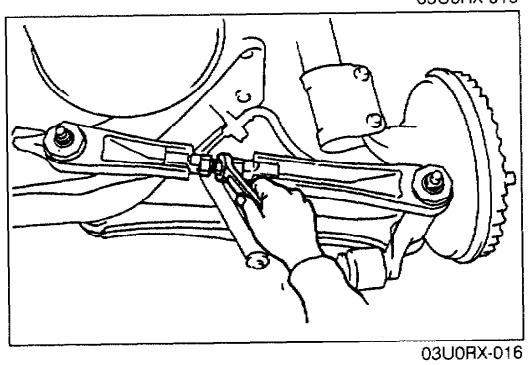

03U0RX-016

2. Turn the lateral link adjustment link to adjust.

Note

- **One turn of the link changes 11.3 m (0.44 in).**

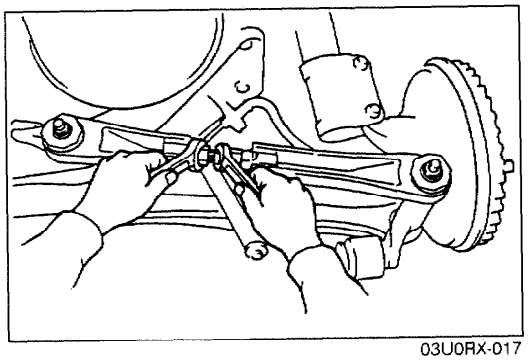

03U0RX-017

3. Tighten the lateral link locknuts to the specified torque.

Tightening torque:
55—64 N·m (5.6—6.5 m-kg, 41—47 ft-lb)

Downloaded from www.Manualslib.com manuals search engine

REAR CROSSMEMBER

Removal / Installation

1. Jack up the vehicle and support it with safety stands.
2. Remove the wheels and tires.
3. Remove in the order shown in the figure, referring to **Removal Note**.
4. Inspect all parts and repair or replace as necessary.
5. Install in the reverse order of removal, referring to **Installation Note**.

Caution

- **Loosely tighten the lateral link and trailing link bolts and nuts when installing. Lower the vehicle and tighten all nuts and bolts to the specified torques with the vehicle unladen.**

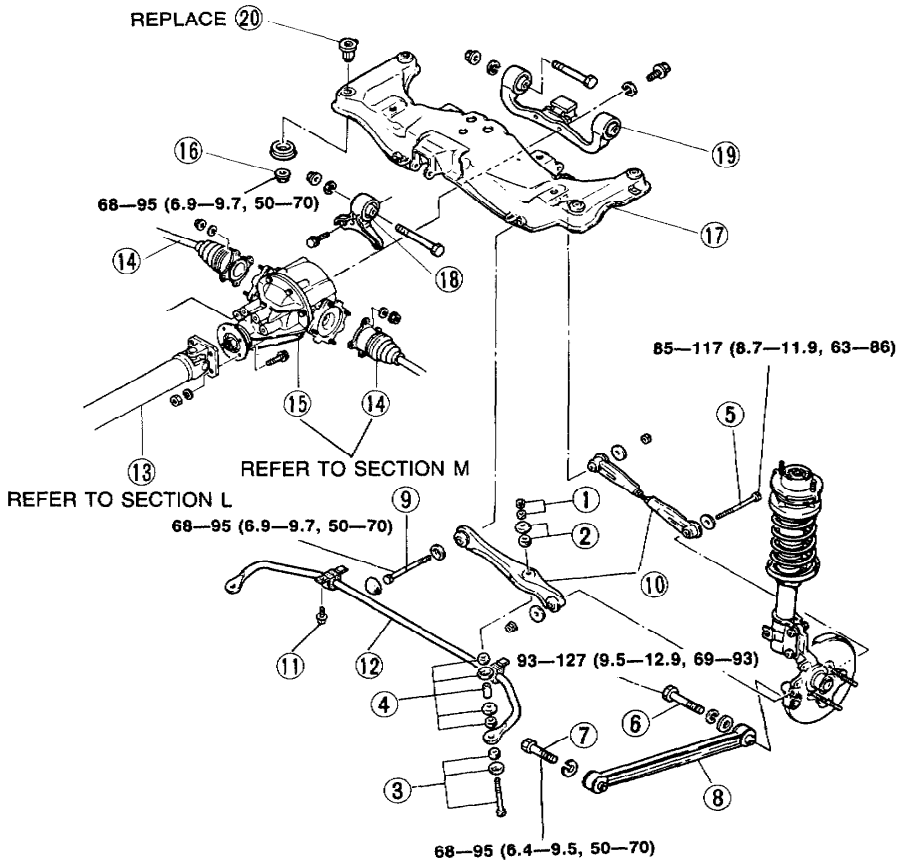

N·m (m-kg, ft-lb)

03U0RX-814

1. Nut (Stabilizer)
2. Bushing and retainer
3. Bolt, retainer and bushing
4. Retainer, bushing and spacer
5. Bolt (Lateral link)
6. Bolt (Trailing link)
7. Bolt (Trailing link)
8. Trailing link
9. Bolt (Lateral link)
10. Lateral link
11. Bolt
12. Rear stabilizer
13. Propeller shaft
14. Driveshaft
15. Rear differential
16. Nut (Rear crossmember)
17. Rear crossmember
18. Front rubber mount
19. Rear rubber mount
20. Crossmember bushing
    Removal note... page R–10
    Installation note ..... page R–10

Downloaded from www.Manualslib.com manuals search engine

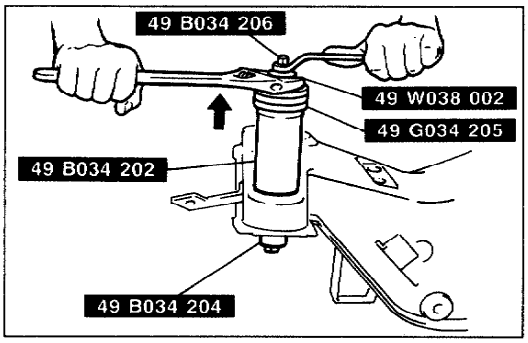

03U0RX-815

Removal note
Crossmember bushing

1. Remove the crossmember bushing in the direction of the arrow with the **SST**.

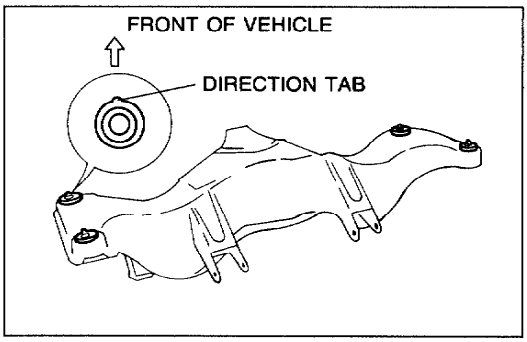

03U0RX-816

Installation note
Crossmember bushing

1. Apply soapy water to the crossmember bushing and position it with the direction tab forward.

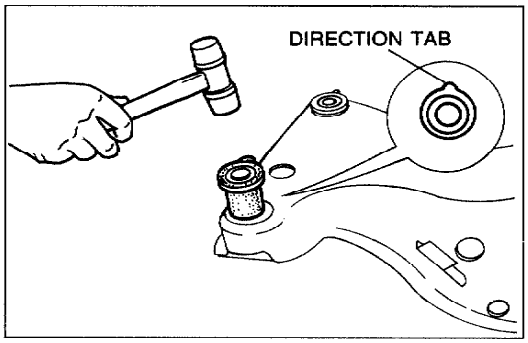

03U0RX-817

2. Install the lower arm bushing with a plastic hammer.

Downloaded from www.Manualslib.com manuals search engine

BODY

INDEX ..... **S– 2**

FEATURES

OUTLINE ..... **S– 2**
OUTLINE OF CONSTRUCTION ..... **S– 2**

SERVICE

SUPPLEMENTAL SERVICE INFORMATION .. **S– 2**
UNDERBODY DIMENSIONS ..... **S– 3**
UNDERBODY PROJECTED DIMENSIONS ... **S– 3**
UNDERBODY STRAIGHT-LINE DIMENSIONS ..... **S– 4**

03U0SX-801

Downloaded from www.Manualslib.com manuals search engine

INDEX

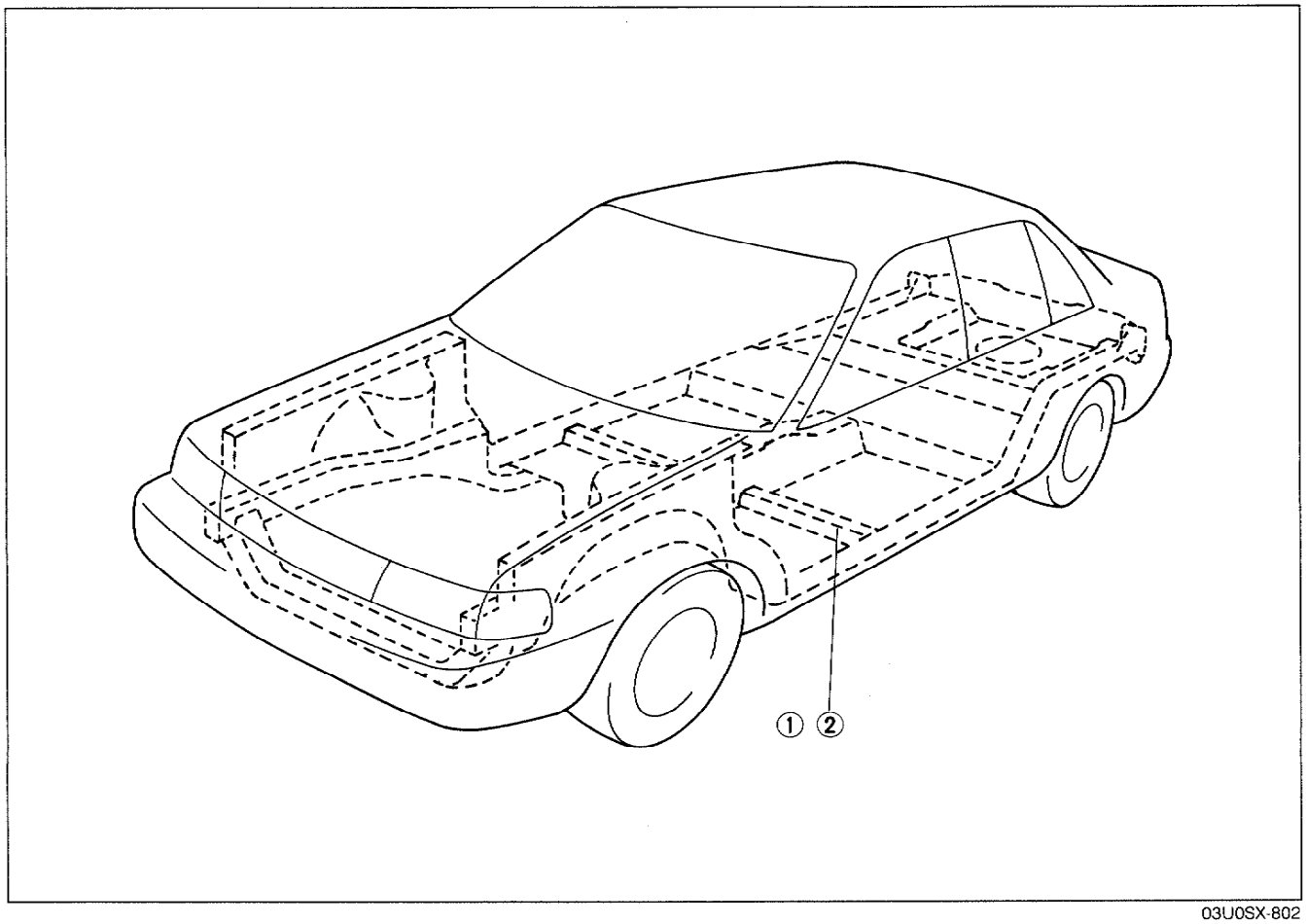

03U0SX-802

1. Underbody projected dimensions..... page S–3
2. Underbody straight-line dimensions..... page S–4

OUTLINE

OUTLINE OF CONSTRUCTION

- The body for the 4WD model is basically the same as for the 2WD model; however, underbody is changed. (Refer to pages S–2, 3.)

03U0SX-803

SUPPLEMENTAL SERVICE INFORMATION

The following points in this section are changed in comparsion with Workshop Manual (1195-10-89E).

Underbody projected dimensions
Underbody straight-line dimensions

03U0SX-804

Downloaded from www.Manualslib.com manuals search engine

UNDERBODY DIMENSIONS

UNDERBODY PROJECTED DIMENSIONS

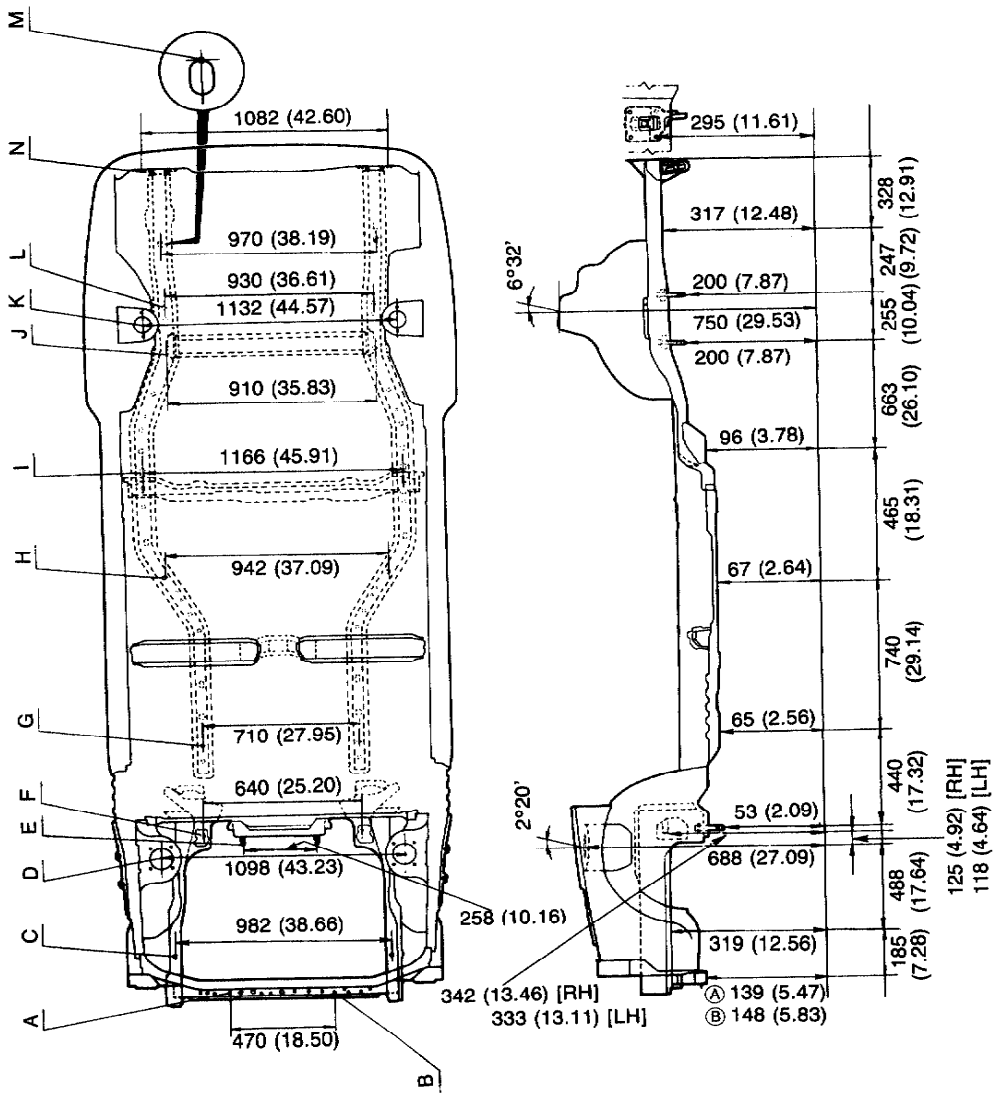

03U0SX-805

Downloaded from www.Manualslib.com manuals search engine

UNDERBODY STRAIGHT-LINE DIMENSIONS

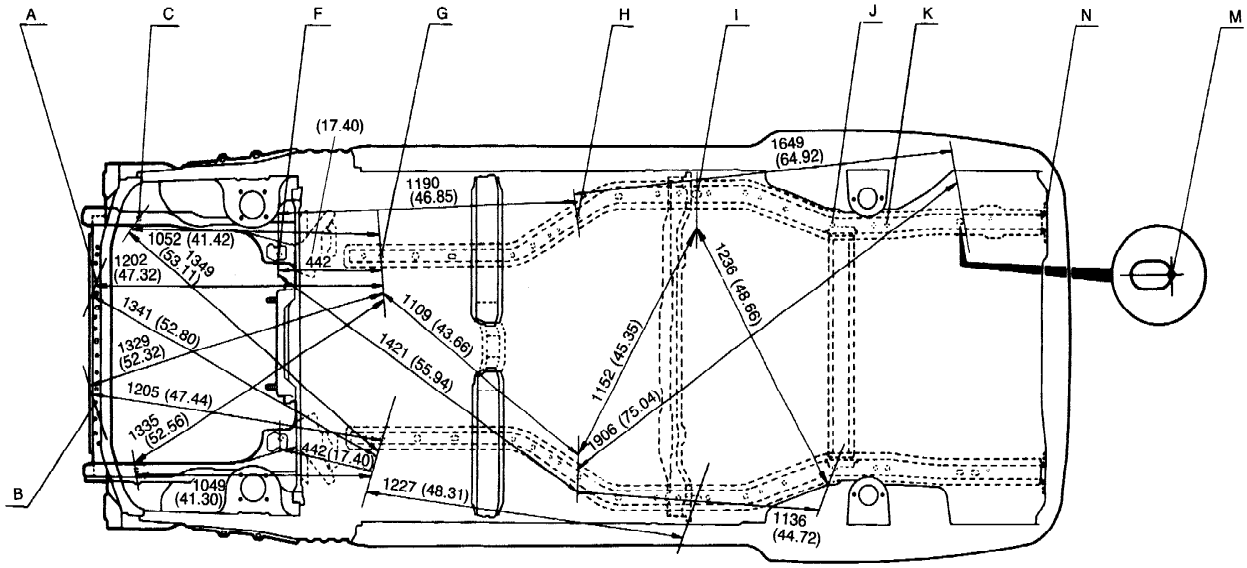

A: CROSSMEMBER REFERENCE HOLE ϕ12 (0.47)
B: CROSSMEMBER REFERENCE HOLE ϕ12 (0.47)
C: FRONT FRAME REFERENCE HOLE ϕ16 (0.63)
D: FRONT SUSPENSION MOUNTING BLOCK MOUNTING SURFACE
E: STEERING GEAR MOUNTING BOLT
F: CROSSMEMBER MOUNTING BOLT
G: FRONT FRAME B REFERENCE HOLE ϕ16 (0.63)
H: FRONT FRAME B REFERENCE HOLE ϕ20 (0.79)
I: TRAILING LINK BRACKET REFERENCE HOLE 10 x 12 (0.39 x 0.47)
J: REAR CROSSMEMBER MOUNTING BOLT
K: REAR SUSPENSION MOUNTING BLOCK MOUNTING SURFACE
L: REAR CROSSMEMBER MOUNTING BOLT
M: REAR SIDE FRAME REFERENCE HOLE 16 x 22 (0.63 x 0.87)
N: REAR BUMPER MOUNTING HOLE ϕ12 (0.47)

mm (in)

03U0SX-806

Downloaded from www.Manualslib.com manuals search engine

BODY ELECTRICAL SYSTEM

INDEX ..... T– 2

FEATURES

OUTLINE ..... T– 3
OUTLINE OF CONSTRUCTION ..... T– 3
FUSE AND JOINT BOX ..... T– 3
FUSE ..... T– 3
WARNING SYSTEM ..... T– 4
WARNING AND INDICATOR LAMPS ..... T– 4

SERVICE

SUPPLEMENTAL SERVICE INFORMATION .. T– 6
INSTRUMENT CLUSTER ..... T– 6
FUEL GAUGE SENDER UNIT ..... T– 6

03U0TX-801

Downloaded from www.Manualslib.com manuals search engine

INDEX

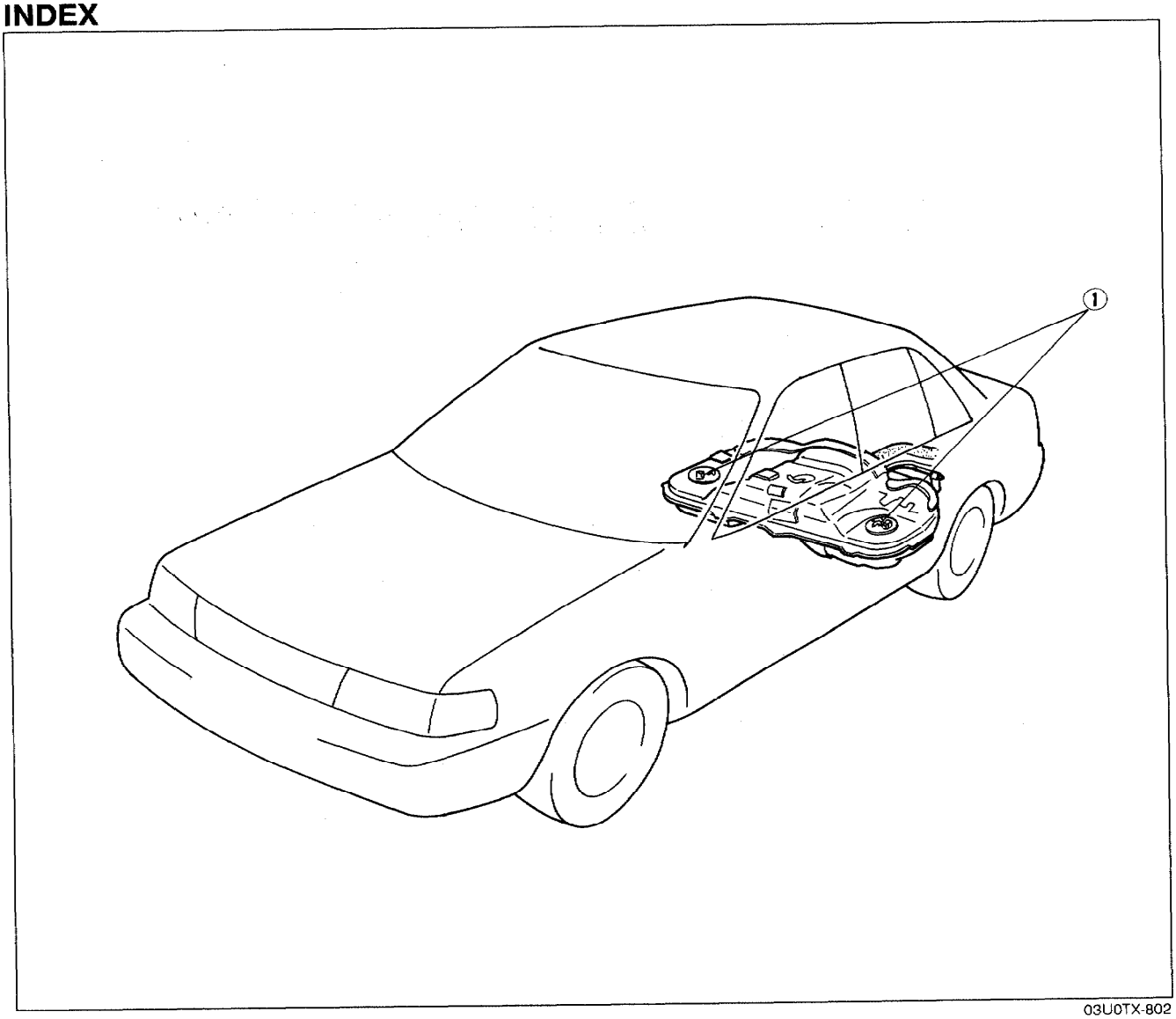

1. Fuel gauge sender unit (in fuel tank)
   Inspection ..... page T–6

Downloaded from www.Manualslib.com manuals search engine

OUTLINE

OUTLINE OF CONSTRUCTION

- The body electrical system for the 4WD model is basically the same as for the 2WD model; however, with the addition of the 4WD components, an additional fuse is included and the warning and indicator lamp system is upgraded.

03U0TX-803

FUSE AND JOINT BOX

FUSE

- A center differential lock (DIF LOCK) fuse is added.

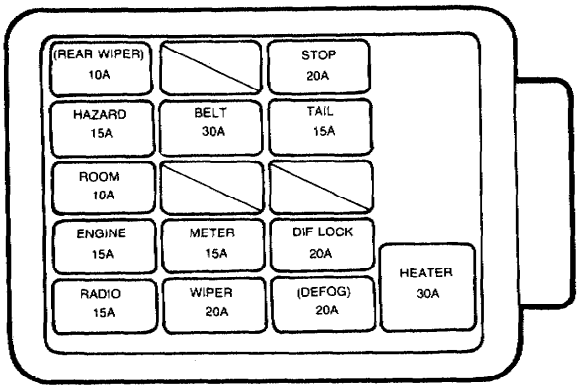

03U0TX-804

Fuse		Protected circuit
(REAR WIPER)	10A	Rear wiper and washer
HAZARD	15A	Hazard warning
ROOM	10A	Clock, interior lamps, Cargo area lamp, Trunk compartment lamp
ENGINE	15A	Alternator
RADIO	15A	Audio
BELT	30A	Passive shoulder belts
METER	15A	Cruise control system, Turn signals, Instrument panel (gauges and warning lamps), Back-up lights
WIPER	20A	Windshield wiper and washer
STOP	15A	Stoplights, Horn
TAIL	15A	Taillights, Side marker lights, Parking lights, illumination lights, License plate lights
DIF LOCK	20A	Center differential lock
(DEFOG)	20A	Rear window defroster
Circuit breaker		
HEATER	30A	Blower motor

Downloaded from www.Manualslib.com manuals search engine

WARNING SYSTEM

WARNING AND INDICATOR LAMP

- With the addition of the center differential lock indicator, the arrangement of the warning and indicator lamps is changed.

WITH TACHOMETER

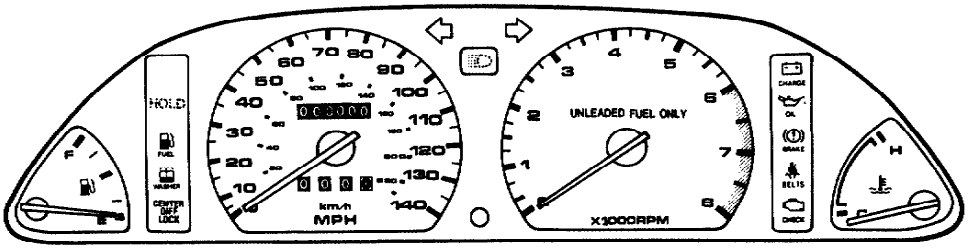

WITHOUT TACHOMETER

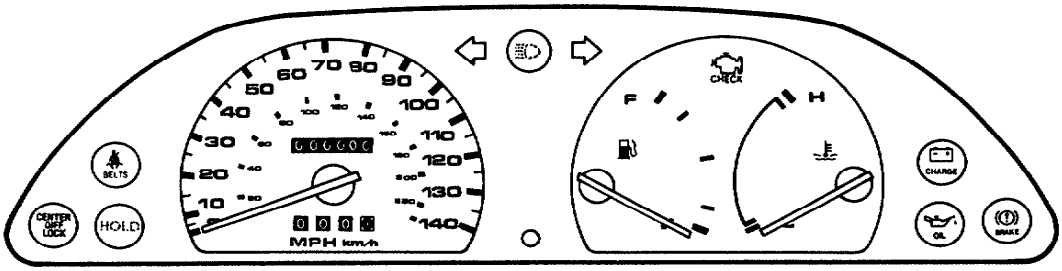

03U0TX-805

Downloaded from www.Manualslib.com manuals search engine

Circuit Diagram

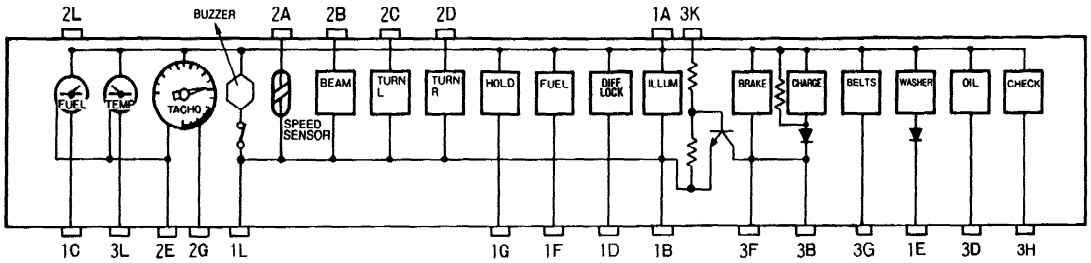

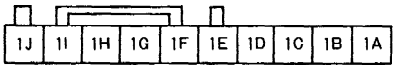

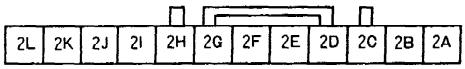

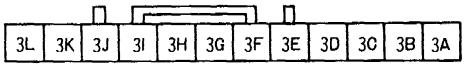

TERMINAL	CONNECTED TO
1A	COMBINATION SWITCH
1B	GROUND
1C	FUEL TANK UNIT
1D	4WD CONTROL UNIT
1E	WASHER LEVEL SENSOR
1F	FUEL TANK UNIT
1G	EC-AT CONTROL UNIT
1H	
1I	
1J	

TERMINAL	Connected to
2A	SPEED SENSOR OUTPUT
2B	LIGHT SWITCH (HIGH BEAM)
2C	TURN SWITCH (L)
2D	TURN SWITCH (R)
2E	GROUND
2F	GROUND
2G	IG COIL (IGNITER)
2H	
2I	
2J	
2K	
2L	IG1 BATTERY

TERMINAL	Connected to
3A	
3B	ALTERNATOR
3C	
3D	OIL PRESSURE SWITCH
3E	
3F	PARKING BRAKE SWITCH, BRAKE FLUID SWITCH
3G	PASSIVE SHOULDER BELT CONTROL UNIT
3H	EGI CONTROL UNIT
3I	
3J	
3K	ST (MT), INHIBITOR (EC-AT)
3L	WATER TEMPERATURE GAUGE UNIT

Downloaded from www.Manualslib.com manuals search engine

SUPPLEMENTAL SERVICE INFORMATION

The following points in this section are changed in comparison with Workshop Manual (1195-10-89E).

Fuel gauge sender unit
- Inspection

03U0TX-807

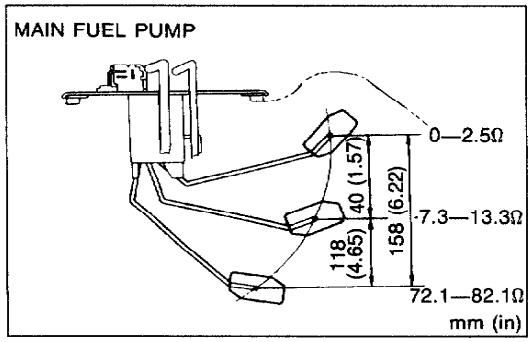

03U0TX-808

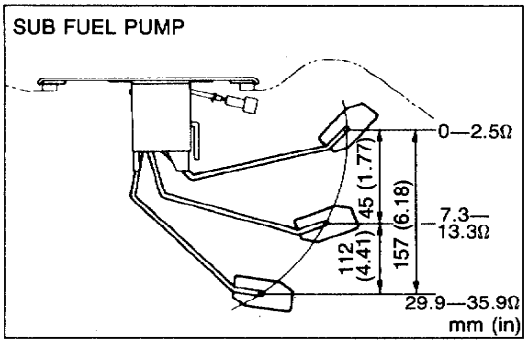

INSTRUMENT CLUSTER (METER)

FUEL GAUGE SENDER UNIT

Inspection

1. Remove the fuel tank gauge unit. (Refer to Section F.)
2. Disconnect the fuel gauge sender unit connector.
3. Check resistance while slowly moving the unit arm from point F to point E.
4. If not as specified, replace the fuel gauge sender unit.

Downloaded from www.Manualslib.com manuals search engine

HEATER AND AIR CONDITIONER SYSTEM

OUTLINE ..... **U– 2**
OUTLINE OF CONSTRUCTION ..... **U– 2**

03U0UX-801

Downloaded from www.Manualslib.com manuals search engine

OUTLINE

OUTLINE OF CONSTRUCTION

- The heater and air conditioner systems for the 4WD model is basically the same as for the 2WD model; however, for EC-AT equipped vehicles, the cooling efficiency of the engine is improved by operating the additional fan independent of the A/C switch.

Circuit Diagram

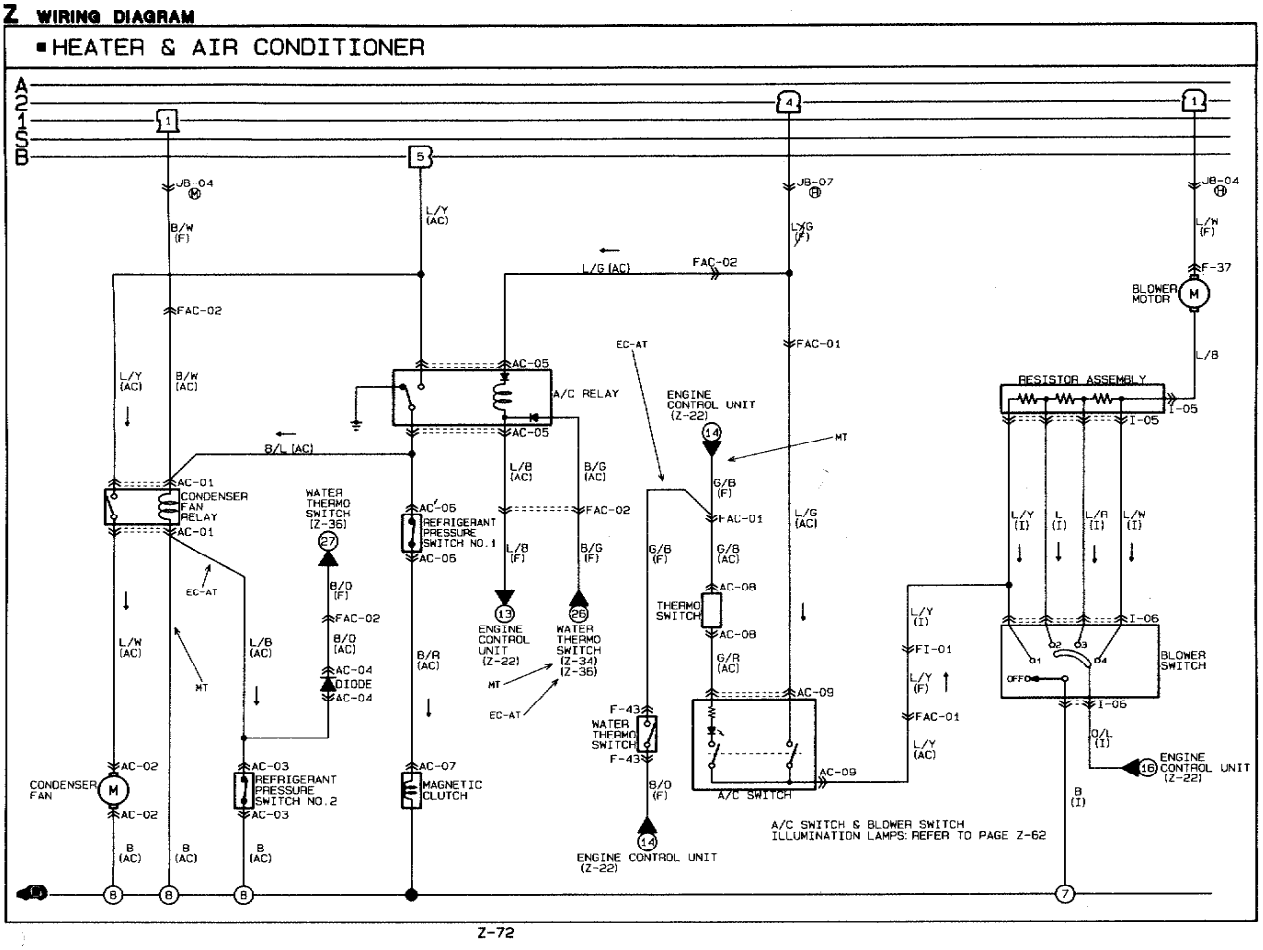

03U0UX-802

Downloaded from www.Manualslib.com manuals search engine

TECHNICAL DATA

MEASUREMENTS ..... TD– 2
ENGINE ..... TD– 2
LUBRICATION SYSTEM ..... TD– 5
COOLING SYSTEM ..... TD– 6
FUEL AND EMISSION CONTROL SYSTEMS ..... TD– 6
ENGINE ELECTRICAL SYSTEM ..... TD– 7
CLUTCH ..... TD– 8
MANUAL TRANSAXLE AND TRANSFER .... TD– 8
AUTOMATIC TRANSAXLE TD–10
PROPELLER SHAFT TD–12
FRONT AND REAR AXLES TD–13
STEERING SYSTEM TD–13
BRAKING SYSTEM TD–14
WHEELS AND TIRES TD–15
SUSPENSION TD–15
BODY ELECTRICAL SYSTEM TD–16
STANDARD BOLT AND NUT TIGHTENING TORQUE TD–16

03UTDX-001

Downloaded from www.Manualslib.com manuals search engine

MEASUREMENTS

Item \ Type		Sedan
Overall length	mm (in)	4,355 (171.5)
Overall width	mm (in)	1,675 (65.9)
Overall height	mm (in)	1,375 (54.1)
Wheel base	mm (in)	2,500 (98.4)
Front tread	mm (in)	1,430 (56.3)
Rear tread	mm (in)	1,435 (56.5)

B. ENGINE

Item \ Engine			BP SOHC
Type			Gasoline, 4-cycle
Cylinder arrangement and number			In-line 4-cylinder
Combustion chamber			Pentroof
Valve system			OHC, belt-driven 16 valves
Bore x Stroke	mm (in)		83.0 x 85.0 (3.27 x 3.35)
Total piston displacement	cc (cu in)		1,839 (112.2)
Compression ratio			8.9
Compression pressure kPa (kg/cm^2, psi)-rpm	Standard		1,197 (12.2, 173)-300
	Minimum		834 (8.5, 121)-300
	Maximum difference between each cylinders		196 (2.0, 28)
Valve timing	IN	Open BTDC	2°
		Close ABDC	50°
	EX	Open BBDC	55°
		Close ATDC	8°
Valve clearance mm (in) (Warm engine)	Valve side	IN	0 Maintenance-free
		EX	0 Maintenance-free
	Cam side	IN	0 Maintenance-free
		EX	0 Maintenance-free
Cylinder head			
Height	mm (in)		107.4—107.6 (4.228—4.236)
Distortion	mm (in)		0.10 (0.004) max.
Grinding	mm (in)		0.10 (0.004) max.
Valve and valve guide			
Valve head diameter	mm (in)	IN	29.9—30.1 (1.177—1.185)
		EX	24.85—25.15 (0.978—0.990)
Valve head margin thickness	mm (in)	IN	0.65 (0.026)
		EX	0.71 (0.028)
Valve face angle		IN	45°
		EX	45°
Valve length mm (in)	IN	Standard	101.77 (4.007)
		Minimum	101.27 (3.987)
	EX	Standard	102.97 (4.054)
		Minimum	102.47 (4.034)
Valve stem diameter	mm (in)	IN	5.970—5.985 (0.2350—0.2356)
		EX	5.965—5.980 (0.2348—0.2354)
Guide inner diameter	mm (in)		6.01—6.03 (0.2366—0.2374)
Valve stem-to-guide clearance	mm (in)	IN	0.025—0.060 (0.0010—0.0024)
		EX	0.030—0.065 (0.0011—0.0026)
		Maximum	0.20 (0.008)
Guide projection (Height "A")	mm (in)	IN	18.3—18.9 (0.720—0.744)
		EX	16.8—17.4 (0.661—0.685)

Downloaded from www.Manualslib.com manuals search engine

Item \ Engine				BP SOHC
Valve seat				
Seat angle			IN	45°
			EX	45°
Seat contact width mm (in)			IN	0.8—1.4 (0.031—0.055)
			EX	0.8—1.4 (0.031—0.055)
Seat sinking mm (in)		IN	Standard	42.05—42.95 (1.656—1.691)
			Maximum	44.0 (1.732)
		EX	Standard	40.55—41.45 (1.596—1.632)
			Maximum	42.5 (1.673)
Valve spring				
Free length	IN	Standard mm (in)		46.1 (1.815)
		Minimum N (kg, lb)/mm (in)		205—231 (20.9—23.5, 46—52)/39 (1.535)
	EX	Standard mm (in)		43.6 (1.717)
		Minimum N (kg, lb)/mm (in)		129—147 (13.1—15.0, 29—33)/37.5 (1.476)
Out-of-square mm (in)			Maximum	IN...1.61 (0.063), EX...1.52 (0.060)
Camshaft				
Lobe height mm (in)		IN	Standard	35.993 (1.4170)
			Wear limit	35.793 (1.4092)
		EX	Standard	36.273 (1.4281)
			Wear limit	36.073 (1.4202)
Journal diameter mm (in)			No.1 & No.5	43.440—43.460 (1.7102—1.7110)
			No.2 & No.4	43.425—43.450 (1.7096—1.7106)
			No.3	43.410—43.435 (1.7091—1.7100)
			Out-of-round	0.05 (0.002) max.
Camshaft bearing oil clearance mm (in)			No.1 & No.5	0.040—0.075 (0.0016—0.0030)
			No.2 & No.4	0.035—0.080 (0.0014—0.0031)
			No.3	0.050—0.095 (0.0020—0.0037)
			Maximum	0.15 (0.006)
Camshaft runout mm (in)				0.03 (0.0012) max.
Camshaft end play mm (in)			Standard	0.06—0.20 (0.0024—0.0079)
			Maximum	0.2 (0.008)
Rocker arm and rocker arm shaft				
Rocker arm inner diameter mm (in)				IN...19.000—19.027 (0.7480—0.7491), EX...19.000—19.033 (0.7480—0.7493)
Rocker arm shaft diameter mm (in)				18.959—18.980 (0.7464—0.7472)
Rocker arm to shaft clearance mm (in)			Standard	IN...0.020—0.068 (0.0008—0.0027), EX...0.020—0.074 (0.0008—0.0029)
			Maximum	0.10 (0.004)
Cylinder block				
Height mm (in)				221.5 (8.720)
Distortion mm (in)				0.15 (0.006) max.
Grinding mm (in)				0.20 (0.008) max.
Cylinder bore diameter mm (in)		Standard size		83.006—83.013 (3.2679—3.2682)
		0.25 (0.010) oversize		83.256—83.263 (3.2778—3.2781)
		0.50 (0.020) oversize		83.506—83.513 (3.2876—3.2879)
Cylinder bore taper and out-of-round mm (in)				0.019 (0.0007) max.

Downloaded from www.Manualslib.com manuals search engine

Item \ Engine			BP SOHC
Piston			
Piston diameter Measured at 90° to pin bore axis and 16.5mm (0.650 in) below oil ring groove mm (in)	Standard size		82.954—82.974 (3.2659—3.2667)
	0.25 (0.010) oversize		83.211—83.217 (3.2760—3.2763)
	0.50 (0.020) oversize		83.461—83.467 (3.2859—3.2861)
Piston-to-cylinder clearance mm (in)		Standard	0.039—0.052 (0.0015—0.0020)
		Maximum	0.15 (0.006)
Piston ring			
Thickness mm (in)		Top	1.47—1.49 (0.0579—0.0587)
		Second	1.47—1.49 (0.0579—0.0587)
End gap (Measured in cylinder) mm (in)		Top	0.15—0.30 (0.006—0.012)
		Second	0.15—0.30 (0.006—0.012)
		Oil (rail)	0.20—0.70 (0.008—0.028)
		Maximum	1.0 (0.039)
Ring groove width in piston mm (in)		Top	1.520—1.535 (0.0598—0.0604)
		Second	1.520—1.535 (0.0598—0.0604)
		Oil	3.02—3.04 (0.1189—0.1197)
Piston ring-to-ring groove clearance mm (in)		Top	0.030—0.065 (0.0012—0.0026)
		Second	0.030—0.065 (0.0012—0.0026)
		Maximum	0.15 (0.006)
Piston pin			
Diameter mm (in)			19.974—19.980 (0.7864—0.7866)
Interference in connecting rod mm (in)			0.013—0.037 (0.0005—0.0015)
Installing pressure N (kg, lb)			4,905—14,715 (500—1,500, 1,100—3,300)
Connecting rod and connecting rod bearing			
Length (Center to center) mm (in)			132.85—132.95 (5.2303—5.2342)
Bending mm (in)			0.075 (0.0030) max./50 (1.97)
Small end bore mm (in)			19.943—19.961 (0.7852—0.7859)
Big end bore mm (in)			48.000—48.016 (1.8898—1.8904)
Big end width mm (in)			21.838—21.890 (0.8598—0.8618)
Connecting rod side clearance mm (in)		Standard	0.110—0.262 (0.0043—0.0103)
		Maximum	0.30 (0.012)
Crankshaft			
Crankshaft runout mm (in)			0.04 (0.0016) max.
Main journal diameter mm (in)	Standard size	Standard	49.938—49.956 (1.9661—1.9668)
		Minimum	49.904 (1.9647)
	0.25 (0.010) undersize	Standard	49.704—49.708 (1.9568—1.9570)
		Minimum	49.652 (1.9548)
	0.50 (0.020) undersize	Standard	49.454—49.458 (1.9470—1.9472)
		Minimum	49.402 (1.9450)
Main journal taper and out-of-round mm (in)			0.05 (0.020) max.
Crankpin diameter mm (in)	Standard size	Standard	44.940—44.956 (1.7693—1.7699)
		Minimum	44.908 (1.7680)
	0.25 (0.010) undersize	Standard	44.690—44.706 (1.7594—1.7601)
		Minimum	44.658 (1.7582)
	0.50 (0.020) undersize	Standard	44.440—44.456 (1.7496—1.7502)
		Minimum	44.408 (1.7483)
	0.75 (0.030) undersize	Standard	44.190—44.206 (1.7398—1.7404)
		Minimum	44.158 (1.7385)
Crankpin taper and out-of-round mm (in)			0.05 (0.020) max.
Main bearing			
Main journal bearing oil clearance mm (in)		Standard	0.018—0.036 (0.0007—0.0014)
		Maximum	0.10 (0.004)
Available undersized bearing mm (in)			0.25 (0.010), 0.50 (0.020)

Downloaded from www.Manualslib.com manuals search engine

Item \ Engine		BP SOHC
Crankpin bearing		
Crankpin bearing oil clearance mm (in)	Standard	0.028—0.068 (0.0011—0.0027)
	Maximum	0.10 (0.004)
Available undersized bearing mm (in)		0.25 (0.010), 0.50 (0.020), 0.75 (0.030)
Thrust bearing		
Crankshaft end play mm (in)	Standard	0.08—0.282 (0.0031—0.0111)
	Maximum	0.30 (0.012)
Bearing width mm (in)	Standard size	2.500—2.550 (0.0984—0.1004)
	0.25 (0.010) oversize	2.625—2.675 (0.1033—0.1053)
	0.50 (0.020) oversize	2.750—2.800 (0.1083—0.1102)
	0.75 (0.030) oversize	2.875—2.925 (0.1132—0.1152)
Timing belt		
Belt deflection mm (in)/98 N (10 kg, 22 lb)		11.0—13.0 (0.43—0.51)

D. LUBRICATION SYSTEM

Item \ Engine		BP SOHC
Lubricating method		Force-fed
Oil pump		
Type		Trochoid gear
Relief pressure kPa (kg/cm^2, psi)		343—441 (3.5—4.5, 50—64)
Regulated pressure kPa (kg/cm^2, psi)-rpm		294—392 (3.0—4.0, 43—57)-3,000
Inner rotor tooth tip to outer rotor clearance mm (in)	Standard	0.02—0.16 (0.0008—0.0063)
	Maximum	0.20 (0.0078)
Outer rotor to body clearance mm (in)	Standard	0.09—0.18 (0.0035—0.0071)
	Maximum	0.22 (0.0087)
Side clearance mm (in)	Standard	0.03—0.11 (0.0012—0.0043)
	Maximum	0.14 (0.0055)
Oil filter		
Type		Full-flow, paper element
Relief pressure differential kPa (kg/cm^2, psi)		78—118 (0.8—1.2, 11—17)
Engine oil		
Capacity liters (US qt, Imp qt)	Total (dry engine)	4.0 (4.2, 3.5)
	Oil pan	3.6 (3.8, 3.2)
	Oil filter	0.17 (0.18, 0.15)
Grade		API Service SF or SG
Viscosity number	Above 30°C (86°F)	SAE 40
	0°C—40°C (32°F—104°F)	SAE 30
	−10°C—20°C (14°F—68°F)	SAE 20W-20
	Above −10°C (14°F)	SAE 20W-40 or 20W-50
	−25°C—30°C (−13°F—86°F)	SAE 10W-30
	Above −25°C (−13°F)	SAE 10W-40 or 10W-50
	Below 0°C (32°F)	SAE 5W-30
	Below −20°C (−4°F)	SAE 5W-20

Downloaded from www.Manualslib.com manuals search engine

E. COOLING SYSTEM

Item / Engine		BP SOHC	
		MTX	ATX
Cooling method		Water-cooled, forced circulation	
Water pump			
Type		Centrifugal, V-belt driven	
Impeller diameter	mm (in)	70 (2.76)	
Number of impeller blades		6	
Speed ratio		1 : 1.05	
Water seal type		Unified mechanical seal	
Thermostat			
Type		Wax, two-stage	
Opening temperature	°C (°F)	Sub: 83.5—86.5 (182—188), Main: 86.5—89.5 (188—193)	
Full-open temperature	°C (°F)	100 (212)	
Full-open lift	mm (in)	Sub: 1.5 (0.06) min., Main: 8.0 (0.31) min.	
Radiator			
Type		Corrugated fin	
Cap valve opening pressure	kPa (kg/cm^2, psi)	74—103 (0.75—1.05, 11—15)	
Cooling circuit checking pressure	kPa (kg/cm^2, psi)	103 (1.05, 15)	
Cooling fan			
Type		Electric	
Number of blades		4	5
Outer diameter	mm (in)	320 (12.6)	340 (13.4)
Capacity	W-V	80-12	160-12
Current	A	6.6	Hi : 13.3, Low : 8.8
Water thermoswitch			
OFF→ON	°C (°F)	97 (207)	
Radiator thermoswitch			
OFF→ON	°C (°F)	—	105 (221)
Coolant			
Capacity	liters (US qt, Imp qt)	5.0 (5.3, 4.4)	6.0 (6.3, 5.3)

	Coolant protection	Volume percentage %		Specific gravity at 20°C (68°F)
		Water	Coolant	
Antifreeze solution	Above −16°C (3°F)	65	35	1.054
	Above −26°C (−15°F)	55	45	1.066
	Above −40°C (−40°F)	45	55	1.078

F. FUEL AND EMISSION CONTROL SYSTEMS

Item / Engine		BP SOHC
Idle speed	rpm	750 ± 50 (with parking brake applied)
Ignition timing	BTDC	5 ± 1°
Fuel pump		
Maximum output pressure	kPa (kg/cm^2, psi)	441—589 (4.5—6.0, 64—85)
Fuel filter		
Type	Low-pressure side	Nylon element (built-in fuel pump)
	High-pressure side	Paper element
Pressure regulator		
Regulating pressure	kPa (kg/cm^2, psi)	265—314 (2.7—3.2, 38—46)
Injector		
Type		High-ohmic
Type of drive		Electromechanical
Resistance	Ω	12—16
Idle speed control (ISC) valve		
Type		Rotary
Resistance	Ω	11—13

Downloaded from www.Manualslib.com manuals search engine

F. FUEL AND EMISSION CONTROL SYSTEMS

Item / Engine			BP SOHC
Purge control solenoid valve			
Resistance Ω			23—27
Water thermosensor			
Resistance kΩ		−20°C (−4°F)	14.6—17.8
		20°C (68°F)	2.21—2.69
		40°C (104°F)	1.0—1.3
		80°C (176°F)	0.29—0.35
Airflow meter			
Resistance Ω	$E_2 \leftrightarrow V_s$	Fully closed	200—600
		Fully open	20—1,200
	$E_2 \leftrightarrow V_c$		200—400
	$E_2 \leftrightarrow THA_A$ (Intake air thermosensor)	−20°C (−4°F)	13,600—18,400
		20°C (68°F)	2,210—2,690
		60°C (140°F)	493—667
	$E_1 \leftrightarrow F_c$	Fully closed	∞
		Fully open	0
Fuel tank			
Capacity liters (US gal, Imp gal)			60 (15.8, 13.2)
Air cleaner			
Element type			Oil permeated
Fuel			
Specification			Unleaded regular (RON 91 or higher)

G. ENGINE ELECTRICAL SYSTEM

Item / Engine			BP SOHC	
			MTX	ATX
Battery	Voltage V		12	
	Type and capacity (20-hour rate)		55D23L (60AH)	
Dark current*1 mA			Max. 20.0	
Alternator	Type		A.C	
	Output V-A		12-65	
	Regulator type		Transistorized (built-in IC regulator)	
	Regulated voltage V		14.1—14.7	
	Brush length mm (in)	Standard	21.5 (0.846)	
		Minimum	8.0 (0.315)	
	Drive belt deflection mm (in)/98 N (10 kg, 22 lb)	New	8—9 (0.31—0.35)	
		Used	9—10 (0.35—0.39)	
Starter	Type		Direct	Coaxical reduction
	Output V-kW		12-0.95	12-1.4
	Brush length mm (in)	Standard	17 (0.67)	17.5 (0.69)
		Minimum	11.5 (0.453)	10.0 (0.39)
Distributor			Electronic spark advance (photo diode)	
Ignition timing BTDC (TEN terminal of diagnosis connector grounded)			5 ± 1°	
Ignition coil	Resistance (at 20°C [68°F])	Primary coil winding	0.81—0.99Ω	
		Secondary coil winding	10—16 kΩ	
Spark plug	Type	NGK	BKR5E 11 BKR6E 11	
		Nippon Denso	K16PR-U11 K20PR-U11	
	Plug gap mm (in)		1.0—1.1 (0.039—0.043)	
	Firing order		1—3—4—2	

*1 Dark current is the constant flow of current while the ignition switch is OFF.
(i.e engine control unit, EC-AT control unit, audio, etc.)

Downloaded from www.Manualslib.com manuals search engine

H. CLUTCH

Item \ Engine/Transaxle Model		BP SOHC G5MX-R
Clutch control		Hydraulic
Clutch pedal		
Type		Suspended
Pedal ratio		6.55
Full stroke mm (in)		135 (5.32)
Height (With carpet) mm (in)		196—204 (7.72—8.03)
Free play mm (in)		5.5—17.4 (0.22—0.69)
Distance to carpet when clutch fully disengaged mm (in)	Minimum	41.0 (1.61)
Flywheel		
Runout limit mm (in)		0.2 (0.008)
Clutch disc		
Type		Single dry plate
Runout limit mm (in)		0.7 (0.027)
Wear limit mm (in)		0.3 (0.012) from rivet head
Outer diameter mm (in)		225 (8.85)
Inner diameter mm (in)		150 (5.91)
Facing thickness mm (in)	Flywheel side	3.5 (0.138)
	Pressure plate side	4.1 (0.161)
Clutch cover		
Type		Diaphragm spring
Set load N (kg, lb)		3,846 (392, 862)

J3. MANUAL TRANSAXLE AND TRANSFER

Item \ Model			BP SOHC G5MX-R
Transmission			
Shift lever position			Floor shift
Gear ratio	First		3.307
	Second		1.833
	Third		1.233
	Fourth		0.914
	Fifth		0.717
	Reverse		3.166
Oil	All season		ATF: DEXRON-II or M-III API: GL-4 SAE 75W-90
	Capacity liters (US qt, Imp qt)		2.6 (2.748, 2.288)
Clearance			
Clearance of lever and reverse idler gear mm (in)		Standard	0.1—0.32 (0.004—0.013)
		Wear limit	0.5 (0.02)
Clearance of shift fork and clutch sleeve mm (in)	Standard	1st—2nd	0.08—0.228 (0.003—0.009)
		3rd—4th	0.1—0.5 (0.004—0.020)
		5th—Rev.	0.15—0.458 (0.060—0.018)
	Wear limit	1st—2nd	0.278 (0.011)
		3rd—4th	0.55 (0.022)
		5th—Rev.	0.508 (0.020)
Clearance of synchronizer ring and gear mm (in)		Standard	1.5 (0.059)
		Wear limit	0.8 (0.031)

Downloaded from www.Manualslib.com manuals search engine

Item			Model	BP SOHC G5MX-R
Gear thrust clearance mm (in)	First	Standard		0.050—0.280 (0.002—0.011)
		Limit		0.330 (0.013)
	Second	Standard		0.175—0.455 (0.007—0.018)
		Limit		0.505 (0.020)
	Third	Standard		0.050—0.200 (0.002—0.008)
		Limit		0.250 (0.039)
	Fourth	Standard		0.165—0.365 (0.065—0.144)
		Limit		0.415 (0.016)
	Fifth	Standard		0.050—0.175 (0.002—0.007)
		Limit		0.225 (0.010)
Bearing preload adjust shim mm (in)	Primary shaft			0.20 (0.007), 0.25 (0.009), 0.30 (0.011), 0.35 (0.013), 0.40 (0.015), 0.45 (0.017), 0.50 (0.019), 0.55 (0.021), 0.60 (0.023), 0.65 (0.025), 0.70 (0.027)
	Secondary shaft			0.20 (0.007), 0.25 (0.009), 0.30 (0.011), 0.35 (0.013), 0.40 (0.015), 0.45 (0.017), 0.50 (0.019), 0.55 (0.021), 0.60 (0.023), 0.65 (0.025), 0.70 (0.027)
Center differential				
Type				Planetary carrier
Number of ring gear teeth	Outer			79
	Inner			66
Number of pinion gear teeth	Outer			14
	Inner			14
Number of sun gear teeth	Pinion gear side			33
	Idle gear side			43
Number of idle-gear teeth				37
Bearing preload N·m (cm-kg, in-lb)				2.9—3.9 (30—40, 26—34)
Bearing preload adjustment shim mm (in)				0.10 (0.003), 0.15 (0.005), 0.20 (0.007), 0.25 (0.009), 0.30 (0.011), 0.35 (0.013), 0.40 (0.015), 0.45 (0.017), 0.50 (0.019), 0.55 (0.021), 0.60 (0.023), 0.65 (0.025), 0.70 (0.027), 0.75 (0.029), 0.80 (0.031), 0.85 (0.033), 0.90 (0.035), 0.95 (0.037), 1.00 (0.039), 1.05 (0.041), 1.10 (0.043), 1.15 (0.045), 1.20 (0.047)
End play of ring gear				0.15—0.30 (0.006—0.012)
Ring gear end play adjustment washer				1.20 (0.047), 1.25 (0.049), 1.30 (0.051), 1.35 (0.053), 1.40 (0.055), 1.45 (0.057), 1.50 (0.059), 1.55 (0.061), 1.60 (0.063), 1.65 (0.065), 1.70 (0.067), 1.75 (0.069), 1.80 (0.071)
End play of sun gear				0.10—0.30 (0.004—0.012)
Sun gear adjustment wadher				3.50 (0.137), 3.55 (0.139), 3.60 (0.141), 3.65 (0.143), 3.70 (0.145), 3.75 (0.147), 3.80 (0.149), 3.85 (0.151), 3.90 (0.153), 3.95 (0.155), 4.00 (0.157), 4.05 (0.159), 4.10 (0.161), 4.15 (0.163), 4.20 (0.165), 4.25 (0.167), 4.30 (0.169)
Transfer carrier				
Final gear reduction ratio				
Number of teeth	Ring gear			37
	Pinion gear			11
Fluid	Grade			API GL-5
	Viscocity	Above −18°C (0°F)		SAE 90
		Below −18°C (0°F)		SAE 80W
	Capacity liter (US qt, Imp qt)			0.5 (0.53, 0.44)

Downloaded from www.Manualslib.com manuals search engine

K2. AUTOMATIC TRANSAXLE

Item			Model	BP SOHC G4AX-EL
Torque converter stall torque ratio				
Gear ratio			1st	2.800
			2nd	1.541
			3rd	1.000
			OD (4th)	0.700
			Reverse	2.333
Final gear ratio				3.842
Automatic transaxle fluid (ATF)		Type		DEXRON-II or M-III
		Capacity liters (US qt, Imp qt)		6.6 (1.74, 1.45)
Engine stall speed rpm		D, S, L and R ranges		2,550—2,650
Time lag sec.		N→D range		0.5—1.0
		N→R range		0.6—1.0
Line pressure kPa (kg/cm², psi)	At idle	D, S and L ranges		353—432 (3.6—4.4, 51—63)
		R range		598—942 (6.1—9.6, 87—137)
	At stall	D, S and L ranges		873—1,040 (8.9—10.6, 127—151)
		R range		1,668—2,011 (17.0—20.5, 242—292)
Throttle pressure kPa (kg/cm², psi)	At idle	D range		39—88 (0.4—0.9, 6—13)
	At stall	D range		471—589 (4.8—6.0, 68—85)
Oil pump	Cam ring and oil pump cover clearance mm (in)		Standard	0.005—0.020 (0.0002—0.0008)
			Maximum	0.080 (0.003)
	Rotor and oil pump cover clearance mm (in)		Standard	0.005—0.020 (0.0002—0.0008)
			Maximum	0.030 (0.0012)
	Vane and oil pump cover clearance mm (in)		Standard	0.015—0.050 (0.0006—0.0020)
			Maximum	0.080 (0.003)
	Seal pin and oil pump cover clearance mm (in)		Standard	0.005—0.020 (0.0002—0.0008)
			Maximum	0.060 (0.002)
	Vane and rotor groove clearance mm (in)		Standard	0.010—0.045 (0.0004—0.0018)
			Maximum	0.065 (0.0026)
	Sleeve outer diameter mm (in)		Standard	28.00 (1.102)
	Rotor bushing in inner diameter mm (in)		Standard	28.00 (1.102)
			Maximum	28.05 (1.104)
	Seal pin outer diameter mm (in)		Standard	5.00 (0.197)
			Maximum	4.90 (0.193)
	Guide ring outer diameter mm (in)		Standard	57.85 (2.278)
			Maximum	57.70 (2.272)
	Valve outer diameter mm (in)		Standard	12.00 (0.472)
			Maximum	11.86 (0.467)
3-4 clutch	Number of drive/driven plates			4/4
	Drive plate thickness mm (in)		Standard	1.6 (0.063)
			Minimum	1.4 (0.055)
	3-4 clutch clearance mm (in)			1.3—1.5 (0.051—0.059)
	Retaining ring size mm (in)			4.2 (0.165), 4.4 (0.173), 4.6 (0.181), 4.8 (0.189), 5.0 (0.1969), 5.2 (0.2047)
	Return spring free length mm (in)			33.2 (1.307)
Forward clutch	Number of drive/driven plates			3/3
	Drive plate thickness mm (in)		Standard	1.6 (0.063)
			Minimum	1.4 (0.055)
	Forward clutch clearance mm (in)			1.0—1.2 (0.040—0.047)
	Retaining ring size mm (in)			5.9 (0.232), 6.1 (0.240), 6.3 (0.248), 6.5 (0.256), 6.7 (0.267), 8.9 (0.350)

Downloaded from www.Manualslib.com manuals search engine

H. CLUTCH

Item \ Engine/Transaxle Model		B6 SOHC	BP SOHC	BP DOHC
		F5M-R		G5M-R
Clutch control		Hydraulic		
Clutch pedal				
Type		Suspended		
Pedal ratio		6.55		
Full stroke	mm (in)	135 (5.32)		
Height (With carpet)	mm (in)	196—204 (7.72—8.03)		
Free play	mm (in)	5.5—17.4 (0.22—0.69)		
Distance to carpet when clutch fully disengaged mm (in)	Minimum	41.0 (1.61)		
Flywheel				
Runout limit	mm (in)	0.2 (0.008)		
Clutch disc				
Type		Single dry plate		
Runout limit	mm (in)	0.7 (0.027)		
Wear limit	mm (in)	0.3 (0.012) from rivet head		
Outer diameter	mm (in)	190 (7.48)	200 (7.87)	215 (8.46)
Inner diameter	mm (in)	132 (5.20)	150 (5.91)	
Facing thickness mm (in)	Flywheel side	3.5 (0.138)		
	Pressure plate side	3.5 (0.138)	3.8 (0.150)	
Clutch cover				
Type		Diaphragm spring		
Set load	N (kg, lb)	3,630 (370, 814)	3,826 (390, 858)	3,846 (392, 862)

Downloaded from www.Manualslib.com manuals search engine

J1. MANUAL TRANSAXLE (F5M-R)

Item \ Engine/Transaxle Model				B6 SOHC	BP SOHC
				F5M-R	
Transmission					
Shift lever position				Floor shift	
Gear ratio	First			3.416	
	Second			1.842	
	Third			1.290	
	Fourth			0.918	
	Fifth			0.731	
	Reverse			3.214	
Oil	Grade			API service GL-4 or GL-5	
	Viscosity	All season		DEXRON-II, M2C33-F or SAE 75W-90	
		Above −18°C (0°F)		SAE 80W-90	
	Capacity	liters (US qt, Imp qt)		2.68 (2.83, 2.36)	
Clearance					
Clearance of lever and reverse idler gear mm (in)			Standard	0.10—0.32 (0.004—0.013)	
			Wear limit	0.37 (0.015)	
Clearance of shift fork and clutch sleeve mm (in)	Standard		1st—2nd	0.10—0.36 (0.004—0.014)	
			3rd—4th	0.20—0.50 (0.008—0.020)	
			5th—Rev.	0.40—0.75 (0.016—0.030)	
	Wear limit		1st—2nd	0.46 (0.018)	
			3rd—4th	0.60 (0.024)	
			5th—Rev.	0.85 (0.034)	
Clearance of synchronizer ring and gear mm (in)			Standard	1.12—1.88 (0.044—0.074)	
			Wear limit	0.8 (0.032)	
Gear thrust clearance mm (in)	First		Standard	0.05—0.28 (0.002—0.011)	
			Limit	0.33 (0.013)	
	Second		Standard	0.18—0.51 (0.007—0.020)	
			Limit	0.56 (0.022)	
	Third		Standard	0.06—0.21 (0.002—0.008)	
			Limit	0.26 (0.010)	
	Fourth		Standard	0.21—0.61 (0.008—0.024)	
			Limit	0.66 (0.026)	
	Fifth		Standard	0.06—0.26 (0.002—0.010)	
			Limit	0.31 (0.012)	
Bearing preload adjust shim mm (in)	Primary shaft			0.1 (0.004), 0.2 (0.008), 0.3 (0.012), 0.4 (0.016)	
	Secondary shaft			0.15 (0.006), 0.20 (0.008), 0.25 (0.010), 0.30 (0.012), 0.35 (0.014), 0.40 (0.016), 0.45 (0.018), 0.50 (0.020)	
Drive and differential					
Final gear	Type			Helical	
	Reduction ratio			3.850 : 1	3.619 : 1
Bearing preload N·m (cm-kg, in-lb)				0.03—0.74 (0.3—7.6, 0.26—6.60)	
Bearing preload adjust shim mm (in)				0.20 (0.008), 0.25 (0.010), 0.30 (0.012), 0.35 (0.014), 0.40 (0.016), 0.45 (0.018), 0.50 (0.020), 0.55 (0.022)	
Backlash of side gear and pinion gear mm (in)				0—0.1 (0—0.004)	

Downloaded from www.Manualslib.com manuals search engine

M. FRONT AND REAR AXLES

Item \ Engine/Transaxle type		BP SOHC	
		MTX	ATX
Driveshaft			
Joint type	Inside	Double offset joint	
	Outside	Bell joint	
Length of joint (between center of joint) mm (in)	Right	689 (27.12)	
	Left	659 (25.94)	
Shaft diameter mm (in)		21.0 (0.82)	
Front axle			
Bearing play axial direction mm (in)		0.050 (0.002)	
Rear axle			
Bearing play axial direction mm (in)		0.050 (0.002)	
Rear differential			
Reduction gear		Hypoid gear	
Differential gear		Straight bevel gear	
Differential ratio		3.909	
Number of teeth	Ring gear	43	
	Drive pinion gear	11	
Fluid	Grade	API Service GL-5	
	Viscosity	SAE 90 or 80W	
	Capacity liter (US qt, Imp qt)	0.65 (0.69, 0.57)	

N. STEERING SYSTEM

Item		POWER STEERING
Steering wheel		
Outer diameter mm (in)		370 (14.57)
Free play mm (in)		0—30 (0—1.18)
Operation force N (kg, lb)		29 (3.0, 6.6) or less
Lock-to-lock		2.76
Steering gear		
Type		Rack and pinion
Steering gear ratio		Infinite (∞)
Backlash between rack and pinion mm (in)		0 (0)
Pinion preload	N·m (cm-kg, in-lb) Preload measured by torque wrench	1.0—.1.3 (10—14, 8.7—12.1)
	kg (oz) Preload measured by pull scale with attachment	1.0—1.4 (35.3—49.4)
Limit of rack housing movement mm (in)		1.5 (0.06)
Distance between left and right brackets mm (in)		258 (10.16)
Rack stroke mm (in)		121 (4.76)
Lubricant type		ATF: M-III or DEXRON-II
Oil capacity liter (US qt, Imp qt)		0.8 (0.85, 0.70)
Drive belt N·m (m-kg, ft-lb)		0.9—1.0 (0.95—1.06, 0.79—0.88)
Deflection with force of 98 N (10 kg, 22 lb) mm (in)		New belt: 8—9 (0.31—0.35) Used belt: 9—10 (0.35—0.39)

Downloaded from www.Manualslib.com manuals search engine

P. BRAKING SYSTEM

Item			Specifications
Brake type			Front ..... disc, Rear ..... disc
Brake pedal			
Height		mm (in)	203—206 (7.99—8.11)
Free play		mm (in)	4—7 (0.16—0.28)
Reserve travel Clearance when pedal depressed at 589 N (60 kg, 132 lb)		mm (in)	70 (2.76) min
Master cylinder			
Master cylinder	Type		Tandem
	Bore diameter	mm (in)	22.22 (0.875)
Front disc brake			
Type			Ventilated
Thickness of pad	mm (in)	Standard	10 (0.39)
		Minimum	2 (0.08)
Thickness of disc plate	mm (in)	Standard	22 (0.87)
		Minimum	20 (0.79)
Runout of disc plate		mm (in)	0.1 (0.004)
Cylinder bore		mm (in)	53.97 (2.12)
Rear brake (disc)			
Type			Solid
Thickness of pad	mm (in)	Standard	7.5 (0.30)
		Minimum	1 (0.04)
Thickness of disc plate	mm (in)	Standard	9 (0.35)
		Minimum	7 (0.28)
Runout of disc plate		mm (in)	0.1 (0.004)
Cylinder bore		mm (in)	30.2 (1.19)
Parking brake			
Type			Mechanical two-rear-wheel control
Parking brake lever notches When lever is pulled at 98N (10 kg, 22 lb)			5—7
Power brake unit			
Diameter		mm (in)	5MTX: 214 (8.43) EC-AT: 239 (9.41)
Fluid pressure per treading force		kPa (kg/cm^2, psi)/N (kg, lb)	5TX More than 1,177 (12, 171)/196 (20, 44) at 0 mmHg (0 inHg) More than 7,063 (72, 1,024)/196 (20, 44) at 500 mmHg (19.7 inHg) EC-AT More than 1,517 (15, 213)/196 (20, 44) at 0 mmHg (0 inHg) More than 8,593 (88, 1,251)/196 (20, 44) at 500 mmHg (19.7 inHg)
Rear wheel hydraulic control system			
Type			Dual proportioning valve
Switching point (Master cylinder pressure)		kPa (kg/cm^2, psi)	2,943 (30, 427)

Downloaded from www.Manualslib.com manuals search engine

Item			Model	F4A-EL		
				B6 SOHC	BP SOHC	BP DOHC
Carrier hub	Clearance between pinion washer and planet carrier mm (in)		Maximum	0.2—0.7 (0.008—0.028)		
Sun gear drum	Bushing inner diameter mm (in)		Maximum	30.425 (1.198)		
Small sun gear	Busing inner diameter mm (in)		Maximum	21.021 (0.828)		
Gear assembly						
Total end play		mm (in)		0.25—0.50 (0.010—0.020)		
End play adjust race		mm (in)		1.2 (0.047), 1.4 (0.055), 1.6 (0.063), 1.8 (0.071), 2.0 (0.079), 2.2 (0.087)		
Idle gear bearing preload		N·m (cm-kg, in-lb)		0.03—0.9 (0.3—9.0, 0.26—7.8)		
Preload adjust shims		mm (in)		3.80 (0.150), 3.85 (0.152), 3.90 (0.154), 3.95 (0.156), 4.00 (0.158), 4.05 (0.159), 4.10 (0.161), 4.15 (0.163), 4.20 (0.165), 4.25 (0.167), 4.30 (0.169), 4.35 (0.171), 4.40 (0.173), 4.45 (0.175), 4.50 (0.177), 4.55 (0.179), 4.60 (0.181), 4.65 (0.183), 4.70 (0.185), 4.75 (0.187)		
Output gear bearing preload		N·m (cm-kg, in-lb)		0.03—0.9 (0.3—9.0, 0.26—7.8)		
Preload adjust shims		mm (in)		0.50 (0.020), 0.55 (0.022), 0.60 (0.024), 0.65 (0.026), 0.70 (0.028), 0.75 (0.030), 0.80 (0.032), 0.85 (0.034), 0.90 (0.035), 0.95 (0.037), 1.00 (0.039), 1.05 (0.041), 1.10 (0.043), 1.15 (0.045), 1.20 (0.047), 1.25 (0.049), 1.30 (0.051), 1.35 (0.053), 1.40 (0.055), 1.45 (0.057)		
Differential						
Bearing preload		N·m (cm-kg, in-lb)		2.9—3.9 (30—40, 26—35)		
Preload adjust shims		mm (in)		0.50 (0.020), 0.55 (0.022), 0.60 (0.024), 0.65 (0.026), 0.70 (0.028), 0.75 (0.030), 0.80 (0.032), 0.85 (0.034), 0.90 (0.035), 0.95 (0.037), 1.00 (0.039), 1.05 (0.041), 1.10 (0.043), 1.15 (0.045), 1.20 (0.047), 1.25 (0.049), 1.30 (0.051), 1.35 (0.053), 1.40 (0.055), 1.45 (0.057)		
Backlash of side gear and pinion		mm (in)	Sandard	0.025—0.1 (0.001—0.004)		
			Maximum	0.5 (0.020)		
Torque converter						
Bushing inner diameter		mm (in)	Standard	53.030—53.075 (2.088—2.090)		
			Maximum	53.075 (2.090)		

Spring Specification

Spring name			Outer diameter mm (in)	Free length mm (in)	No. of coil	Wire diameter mm (in)
Upper control valve body	Throttle modulator spring		8.1 (0.319)	44.4 (1.748)	10.5	0.8 (0.032)
	Throttle spring		5.4 (0.231)	44.5 (1.752)	24.6	0.9 (0.035)
	Throttle assist spring		5.15 (0.203)	26.88 (1.058)	16.2	0.6 (0.024)
Main control valve body	Pressure requlator spring		11.5 (0.453)	34.2 (1.346)	9.5	1.0 (0.039)
	1-2 shift spring		7.4 (0.291)	36.6 (1.441)	12.0	0.8 (0.032)
	Low reducing spring		7.9 (0.311)	34.5 (1.358)	11.0	0.8 (0.032)
	2-3 timing spring		8.0 (0.315)	27.84 (1.096)	10.0	0.8 (0.032)
	3-2 timing spirng		8.0 (0.315)	29.98 (1.180)	10.0	0.8 (0.032)
	3-4 shift spring		7.4 (0.291)	36.6 (1.441)	12.0	0.8 (0.032)
Premain control valve body	Bypass spirng	B6 SOHC BP SOHC	4.9 (0.193)	27.6 (1.087)	23.0	0.55 (0.022)
		BP DOHC	4.9 (0.193)	30.5 (1.201)	23.0	0.55 (0.022)
	2-3 shift spring		7.4 (0.291)	36.6 (1.441)	12.0	0.8 (0.032)
	Converter relief spring		8.6 (0.339)	68.4 (2.693)	27.5	1.2 (0.047)
	Lockup control spring		5.0 (0.197)	35.2 (1.386)	19.0	0.6 (0.024)
Control valve body	Throttle relief spring		6.6 (0.260)	21.6 (0.850)	11.5	0.8 (0.032)
Oil pump	Spring		13.0 (0.512)	53.0 (2.087)	12.0	1.2 (0.047)

Downloaded from www.Manualslib.com manuals search engine

Spring name			Outer diameter mm (in)	Free length mm (in)	No. of coil	Wire diameter mm (in)
Accumulator	2-3 accumulator small spring	BP DOHC	11.6 (0.457)	59.7 (2.350)	16.9	1.8 (0.071)
		B6 SOHC BP SOHC	10.0 (0.394)	71.8 (2.827)	24.2	1.4 (0.055)
	2-3 accumulator large spring	BP DOHC	15.0 (0.591)	71.8 (2.827)	9.8	1.2 (0.047)
		B6 SOHC BP SOHC	15.0 (0.591)	71.8 (2.827)	15.8	2.0 (0.079)
	1-2 accumulator small spring		—	—	—	—
	1-2 accumulator large spring	BP DOHC	16.0 (0.630)	79.0 (3.110)	17.2	2.1 (0.083)
		B6 SOHC BP SOHC	16.0 (0.630)	87.8 (3.457)	18.2	2.0 (0.079)
	N-D Accumulator small spring	B6 SOHC	10.5 (0.413)	61.4 (2.417)	15.0	1.0 (0.039)
		BP SOHC BP DOHC	10.5 (0.413)	53.6 (2.110)	16.7	1.0 (0.039)
	N-D Accumulator large spring	B6 SOHC	14.7 (0.579)	61.4 (2.417)	12.9	1.5 (0.059)
		BP SOHC BP DOHC	14.7 (0.579)	53.6 (2.110)	11.7	1.6 (0.063)
	N-R Accumulator small spring		9.8 (0.386)	93.2 (3.669)	31.5	1.3 (0.051)
	N-R Accumulator large spring		14.0 (0.551)	106.5 (4.193)	23.0	1.7 (0.067)
3-4 clutch	Return spring		74.4 (2.929)	40.5 (1.594)	1.0	5.0 (0.197)
Coasting clutch	Return spring		7.3 (0.287)	20.45 (0.805)	10.0	1.0 (0.039)
Low and reverse brake	Return spring		5.55 (0.219)	14.3 (0.563)	12.0	0.75 (0.030)
Servo	Return spring		27.7 (1.091)	43.25 (1.703)	4.5	3.2 (0.126)

Vehicle Speed at Shiftpoint Table

Mode	Range	Throttle condition (Throttle sensor voltage)	Shift	Drum speed rpm			Vehicle speed km/h (mph)		
				B6 SOHC	BP SOHC	BP DOHC	B6 SOHC	BP SOHC	BP DOHC
NORMAL	D	Fully opened (4.0 volt)	$D_1 \rightarrow D_2$	5,150—5,700	5,150—5,700	5,850—6,400	52—58 (32—36)	56—62 (35—38)	59—65 (37—40)
			$D_2 \rightarrow D_3$	4,850—5,300	4,850—5,250	5,350—5,800	92—100 (57—62)	99—107 (61—66)	101—109 (63—68)
			$D_3 \rightarrow OD$	5,500—5,850	5,500—5,850	5,950—6,300	156—166 (97—103)	168—178 (104—110)	167—177 (104—110)
		Half throttle (1.6—2.2 volt)	$D_1 \rightarrow D_2$	2,550—3,150	3,000—3,550	3,450—4,050	26—32 (16—20)	33—39 (20—24)	35—41 (22—25)
			$D_2 \rightarrow D_3$	2,500—3,150	3,100—3,700	3,700—4,350	48—60 (30—37)	63—75 (39—47)	70—82 (43—51)
			$D_3 \rightarrow OD$	2,750—3,350	3,400—4,000	4,200—4,750	78—96 (48—60)	104—122 (64—76)	119—137 (74—85)
			Lock-up ON (OD)	1,900—2,350	2,350—2,800	2,950—3,400	78—96 (48—60)	104—122 (64—76)	119—137 (74—85)
			Lock-up OFF (OD)	1,850—2,050	2,150—2,350	2,400—2,600	76—84 (47—52)	94—102 (58—63)	97—105 (60—65)
		Kickdown	$OD \rightarrow D_3$	3,600—3,750	3,500—3,700	3,850—4,100	142—152 (88—94)	153—163 (95—101)	155—165 (96—102)
			$OD \rightarrow D_2$	2,000—2,200	2,000—2,200	2,300—2,500	82—90 (51—56)	88—96 (55—60)	94—102 (58—63)
			$OD \rightarrow D_1$	1,000—1,150	950—1,100	1,250—1,400	42—48 (26—30)		52—58 (32—36)
			$D_3 \rightarrow D_2$	2,900—3,150	2,850—3,150	3,350—3,600	82—90 (51—56)	88—96 (55—60)	94—102 (58—63)
			$D_3 \rightarrow D_1$	1,450—1,650	1,350—1,550	1,850—2,050	42—48 (26—30)		52—58 (32—36)
			$D_2 \rightarrow D_1$	2,200—2,500	2,050—2,350	2,750—3,100	42—48 (26—30)		52—58 (32—36)
	S	Fully opened (4.0 volt)	$S_1 \rightarrow S_2$	5,150—5,750	5,150—5,700	5,850—6,450	52—58 (32—36)	56—62 (35—38)	59—65 (37—40)
			$S_2 \rightarrow S_3$	4,850—5,300	4,850—5,250	5,400—5,800	92—100 (57—62)	99—107 (61—66)	101—109 (63—68)
			$S_3 \rightarrow S_2$	2,900—3,150	2,850—3,150	3,350—3,600	82—90 (51—56)	88—96 (55—60)	94—102 (58—63)
			$S_2 \rightarrow S_1$	2,200—2,500	2,050—2,350	2,750—3,100	42—48 (26—30)		52—58 (32—36)
		Half throttle (1.6—2.2 volt)	$S_1 \rightarrow S_2$	2,550—3,150	3,000—3,550	3,450—4,050	26—32 (16—20)	33—39 (20—24)	35—41 (22—25)
			$S_2 \rightarrow S_3$	2,500—3,150	3,100—3,700	3,700—4,350	48—60 (30—37)	63—75 (39—47)	70—82 (43—51)
	L	Fully opened (4.0 volt)	$L_1 \rightarrow L_2$	5,150—5,750	5,150—5,700	5,850—6,450	52—58 (32—36)	56—62 (35—38)	59—65 (37—40)
			$L_2 \rightarrow L_1$	2,200—2,500	2,050—2,350	2,800—3,100	42—48 (26—30)		52—58 (32—36)
		Half throttle (1.6—2.2 volt)	$L_1 \rightarrow L_2$	2,550—3,150	3,000—3,550	3,450—4,050	26—32 (16—20)	33—39 (20—24)	35—41 (22—25)

Downloaded from www.Manualslib.com manuals search engine

Mode	Range	Throttle condition (Throttle sensor voltage)	Shift	Drum speed rpm			Vehicle speed km/h (mph)		
				B6 SOHC	BP SOHC	BP DOHC	B6 SOHC	BP SOHC	BP DOHC
HOLD	D	Fully opened (4.0 volt)	$D_1 \rightarrow D_2$	2,650—3,250	2,450—3,000	2,650—3,250	27—33 (17—20)		
			$D_2 \rightarrow D_3$	2,100—2,650	1,950—2,450	2,100—2,650	40—50 (25—31)		
			$D_3 \rightarrow D_1$	300—500	250—450	400—600	9—15 (6—9)		12—18 (7—11)
	S	Fully closed (0.5 volt)	$S_3 \rightarrow S_2$	3,200—3,400	3,200—3,400	3,550—3,750	91—97 (56—60)	98—104 (61—64)	100—106 (62—66)
	L		$L_2 \rightarrow L_1$	2,250—2,600	2,100—2,400	2,250—2,600	43—49 (27—30)		

M. FRONT AND REAR AXLES

Item	Engine/Transaxle type	B6 SOHC		BP SOHC		BP DOHC	
		MTX	ATX	MTX	ATX	MTX	ATX
Driveshaft							
Joint type	Inside	Tripod joint					
	Outside	Ball joint					
Length of joint (between center of joint) mm (in)	Right	662.0 (22.06)		668.5 (23.32)		427.5 (16.83)	
	Left	383.5 (15.10)		382.5 (15.06)		365.5 (14.39)	385.0 (15.16)
Shaft diameter		21.5 (0.85)		23.0 (0.91)			
Front axle							
Bearing play axial direction mm (in)		0.050 (0.002)					
Rear axle							
Bearing play axial direction mm (in)		0.050 (0.002)					

N. STEERING SYSTEM

Item		Specifications
Steering wheel		
Outer diameter	mm (in)	370 (14.57)
Free play	mm (in)	0—30 (0—1.18)
Operation force	N (kg, lb)	M/S : 108 (11, 24.2) or less P/S : 29 (3.0, 6.6) or less
Lock-to-lock		M/S : 4.3 P/S : 3.0
Max. steering angle	Inner	40°00' ± 2°
	Outer	33°00' ± 2°
Steering gear		
Type		Rack and pinion
Steering gear ratio		Infinite (∞)
Backlash between rack and pinion	mm (in)	0 (0)
Pinion preload	N·m (cm-kg, in-lb) Preload measured by torque wrench	M/S : 1.0—1.4 (10—14, 8.68—12.15) P/S : 1.0—1.2 (10—12, 8.68—10.42)
	g (oz) Preload measured by pull scale with attachment	M/S : 1,000—1,400 (35.3—49.4) P/S : 1,000—1,200 (35.3—42.36)
Limit of rack housing movement	mm (in)	1.5 (0.06)
Distance between left and right brackets	mm (in)	298.5 (11.75)
Rack stroke	mm (in)	140 (5.51)
Lubricant type (power steering)		ATF: M-III or DEXRON-II
Oil capacity (power steering)	liter (US qt, Imp qt)	0.8 (0.85, 0.70)
Drive belt		
Deflection with force of 98 N (10 kg, 22 lb)	mm (in)	New belt: 8—9 (0.31—0.35) Used belt: 9—10 (0.35—0.39)

Downloaded from www.Manualslib.com manuals search engine

P. BRAKING SYSTEM

Item			Specifications
Brake type			Front ..... disc, Rear ..... disc or drum
Brake pedal			
Height		mm (in)	193—196 (7.60—7.72)
Free play		mm (in)	4—7 (0.16—0.28)
Reserve travel Clearance when pedal depressed at 589 N (60 kg, 132 lb)		mm (in)	70 (2.76) min
Master cylinder			
Master cylinder	Type		Tandem
	Bore diameter	mm (in)	22.22 (0.875)
Front disc brake			
Type			Ventilated
Thickness of pad	mm (in)	Standard	10 (0.39)
		Minimum	2 (0.08)
Thickness of disc plate	mm (in)	Standard	22 (0.87)
		Minimum	20 (0.79)
Runout of disc plate		mm (in)	0.1 (0.004)
Cylinder bore		mm (in)	53.97 (2.12)
Rear brake (disc)			
Type			Solid
Thickness of pad	mm (in)	Standard	7.5 (0.30)
		Minimum	1 (0.04)
Thickness of disc plate	mm (in)	Standard	9 (0.35)
		Minimum	7 (0.28)
Runout of disc plate		mm (in)	0.1 (0.004)
Cylinder bore		mm (in)	30.2 (1.19)
Rear brake (drum)			
Type			Leading & trailing
Thickness of lining	mm (in)	Standard	4.5 (0.18)
		Minimum	1 (0.04)
Drum inside diameter	mm (in)	Standard	228.6 (9.0)
		Minimum	229.6 (9.04)
Wheel cylinder bore		mm (in)	17.46 (0.687)
Parking brake			
Type			Mechanical two-rear-wheel control
Parking brake lever notches When lever is pulled at 98N (10 kg, 22 lb)			5—7
Power brake unit			
Diameter		mm (in)	(a): 214 (8.43) (b): 239 (9.41)
Fluid pressure per treading force		kPa (kg/cm^2, psi)/N (kg, lb)	More than 1,177 (12, 171)/196 (20, 44) at 0 mmHg (0 inHg) More than 7,063 (72, 1,024)/196 (20, 44) at 500 mmHg (19.7 inHg)
Rear wheel hydraulic control system			
Type			Dual proportioning valve
Switching point (Master cylinder pressure)		kPa (kg/cm^2, psi)	2,453 (25, 356)

(a): BP engine with 5MTX, B6 engine
(b): BP engine with EC-AT

Downloaded from www.Manualslib.com manuals search engine

Q. WHEELS AND TIRES

Item		Specifications
Wheel		
Size		Standard: 5-Jx13, 5 1/2-JJx14 Temporary spare: 4-Tx14
Offset mm (in)		Standard: 45 (1.77) Temporary spare: 45 (1.77)
Diameter of pitch circle mm (in)		100 (3.94)
Tire		
Size		Standard: 155/80R13, 175/70R13, 185/60R14 Temporary spare: T115/70D14
Inflation pressure kPa (kg/cm², psi)	Front	Standard: 216 (2.2, 31) Temporary spare: 415 (4.2, 60)
	Rear	Standard: 216 (2.2, 31) Temporary spare: 415 (4.2, 60)
Wheel and tire		
Runout limit mm (in)	Horizontal	2.0 (0.079)
	Vertical	1.5 (0.059)
Unbalance limit g (oz)		20 (0.71)

R. SUSPENSION

Item				Specifications
Suspension type				
Shock absorber	Suspension			Double-acting, oil-filled
Coil spring	Type	Front		Taper wound
		Rear		Straight wound
	Dimension			See coil spring specification below
Stabilizer	Type			Torsion bar
	Diameter mm (in)	BP SOHC	Front	19.1 (0.75)
			Rear	20.0 (0.79)
		BP DOHC	Front	22.0 (0.87)
			Rear	20.0 (0.79)
		B6	Front	—
			Rear	20.0 (0.79)
Wheel alignment (*1Unladened)	Front	Maximum steering angle	Inner	40° ± 2°
			Outer	33° ± 2°
		Total toe-in	mm (in)	2 ± 3 (0.08 ± 0.12)
			degree	0.2° ± 0.3°
		Camber angle		–0°05' ± 45'
		Caster angle		2°05' ± 45'
		Kingpin angle		12°25'
	Rear	Total toe-in	mm (in)	2 ± 3 (0.08 ± 0.12)
			degree	0.2° ± 3°
		Camber angle		–0°20' ± 45'

*1 Fuel tank full; radiator coolant and engine oil at specified level; and spare tire, jack, and tools in designated positions.

Downloaded from www.Manualslib.com manuals search engine

Coil Spring Specifications

Item		Wire diameter mm (in)	Coil outer diameter mm (in)	Free length mm (in)	Coil number	Identification mark color	
						M*1	A*2
Front	A	12.7 (0.5)	133–159 (5.24–6.26)	293 (11.54)	3.1	Pink	Yellow
	B	12.9 (0.51)	133–159 (5.24–6.26)	294 (11.57)	3.2	Light green	Yellow
	C	13.2 (0.52)	133–159 (5.24–6.26)	300 (11.81)	3.4	Purple	Yellow
	D	13.3 (0.52)	132–158 (5.20–6.22)	301 (11.85)	3.4	Light blue	Yellow
	E	13.3 (0.52)	132–158 (5.20–6.22)	286 (11.26)	3.2	Orange	Red
	F	13.4 (0.53)	133–159 (5.24–6.26)	287 (11.3)	3.3	Cream	Red
Rear	G	11.6 (0.46)	140 (5.51)	334 (13.15)	4.6	Brown	—
	H	11.9 (0.47)		333 (13.11)	4.7	Gray	—
	I	12.1 (0.48)		332 (13.07)	4.8	Orange	—
	J	11.7 (0.46)		333 (13.11)	4.5	Blue	—
	K	12.3 (0.48)		332 (13.07)	4.9	Blue & White	—
	L	12.5 (0.49)		331 (13.03)	5.1	Blue & Green	—

*1 Main identification mark color: Indicated on second coil from bottom.
*2 Auxiliary identification mark color: Indicated on third coil from bottom.

T. BODY ELECTRICAL SYSTEM

Item			Specification (W) (Bulb Trade number)
Exterior lamps	Headlight		65/45 (9004)
	Front turn signal/Parking light		27/8 (1157)
	Stop/Taillight		27/8 (1157)
	High mount stoplight		18.4 (1141)
	Rear turn single light		27 (1156)
	Back-up light		27 (1156)
	Rear side marker light (Sedan)		3.8 (194)
	License plate light		7.5 (89) [Sedan], 5 (168) [3HB]
Interior lamps	Interior and spot lamp	Interior	10
		Spot	6
	Interior lamp		10
	Spot lamp (in overhead console)		8 (67)
	Cargo room lamp		5 (168)
	Turnk room lamp		5 (168)
Indicator and warning lamps	High beam		3.4
	Turn light		3.4
	Brake		3
	Hold		3 (158)
	Charge		3 (158)
	Oil pressure		3 (158)
	Washer		3 (158)
	Seat belt		3 (158)
	Malfunction		3 (158)
	Fuel		3 (158)
	Illumination		3.4

Downloaded from www.Manualslib.com manuals search engine

SPECIAL TOOLS

GENERAL INFORMATION ..... ST– 2
ENGINE..... ST– 3
CLUTCH AND MANUAL TRANSAXLE..... ST– 4
AUTOMATIC TRANSAXLE..... ST– 6
DIFFERENTIAL ..... ST– 6
FRONT AND REAR AXLES..... ST– 7
STEERING SYSTEM ..... ST– 8
BRAKING SYSTEM..... ST– 9
FRONT AND REAR SUSPENSIONS..... ST–10
HEATER AND AIR CONDITIONER
SYSTEMS ST–10
CHECKER AND OTHER EQUIPMENT..... ST–10

03USTX-801

Downloaded from www.Manualslib.com manuals search engine

GENERAL INFORMATION

The letters A and B in the priority column indicate the degree of importance of each tool.
A.....Indispensable
The tools ranked A in this list are indispensable for performing operations satisfactorily, easily, safely, and efficiently. It is, therefore advisable that all service shops have these tools.
B.....Selective
The tools in this list are not as necessary as tools ranked A, but all service shops should have these tools to perform repairs more easily and more efficiently.

Note

- **When ordering tool sets that consist of several tools, check the List in the Parts Catalogue to make sure that some tools are not duplicated in other sets you may already have. If they are, instead of ordering the set, order only those new tools that are needed.**
- **There are new SST explanations in this tool chart.**
  These tools are indicated by "NEW SST" in description column.

03USTX-002

Downloaded from www.Manualslib.com manuals search engine

ENGINE

TOOL NUMBER & DESCRIPTION	PRIORITY	ILLUSTRATION
49 0107 680A Engine stand	A	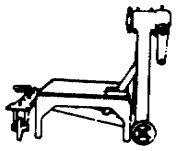
49 L010 1A0 Hanger set, engine stand	A	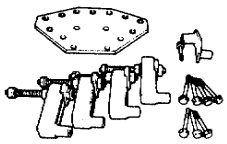
49 0636 100A Arm, valve spring lifter	A	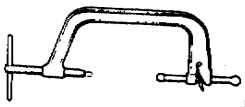
49 B012 006 Pivot	A	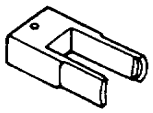
49 B012 005 Remover & installer, valve guide	A	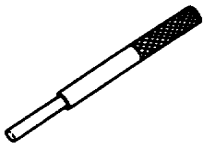
49 9200 145 Adapter set, radiator cap tester	A	
49 9200 020 Tension gauge, V-ribbed belt	B	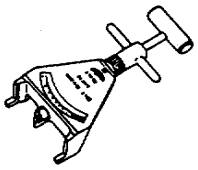
49 L012 0A0 Installer set, valve seal & valve guide	A	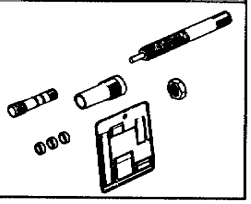

TOOL NUMBER & DESCRIPTION	PRIORITY	ILLUSTRATION
49 0187 280 Oil pressure gauge	B	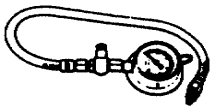
49 H011 001A Support block head	A	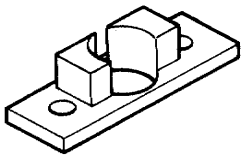
49 L011 0A0 Setting tool set, piston pin	A	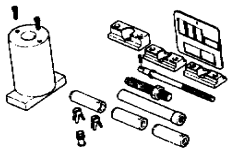
49 B011 102 Lock tool, crankshaft	A	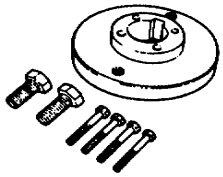
49 S120 710 Holder, coupling flange	A	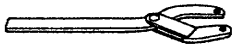
49 E301 060 Brake, ring gear	A	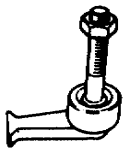
49 1285 071 Puller, needle bearing	A	
—	—	—

Downloaded from www.Manualslib.com manuals search engine

CLUTCH AND MANUAL TRANSAXLE

TOOL NUMBER & DESCRIPTION	PRIORITY	ILLUSTRATION
49 G017 5A0 Engine support	A	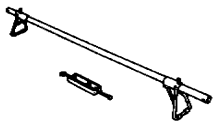
49 SE01 310 Clutch disc centering tool	A	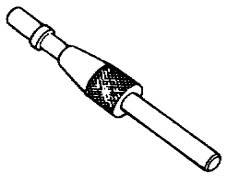
49 G019 0A0 Hanger, transaxle	A	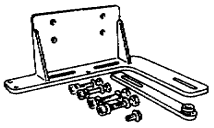
49 G026 103 Support block	A	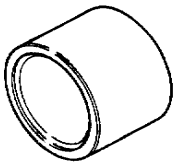
49 G030 370 Removing plate	A	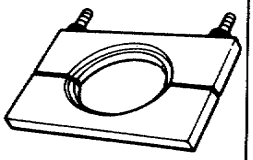
49 G030 380C Shim selector set	A	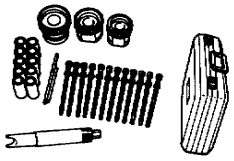
49 0839 425C Puller set, bearing	A	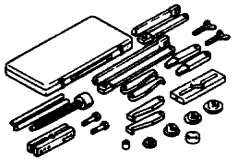
49 G030 795 Installer, oil seal	A	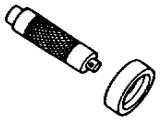

TOOL NUMBER & DESCRIPTION	PRIORITY	ILLUSTRATION
49 0636 145 Puller, fan pulley boss	A	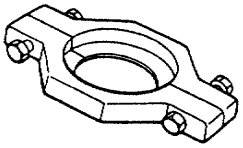
49 G030 440 Holder, primary shaft	A	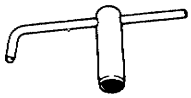
49 H028 202 Block L	A	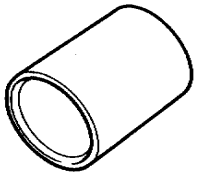
49 U027 003 Installer, oil seal	A	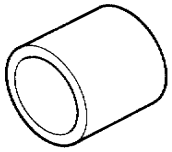
49 B027 001 Holder, differential side gear	A	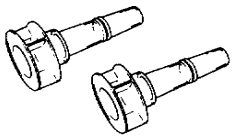
49 F401 330B Installer set, bearing	A	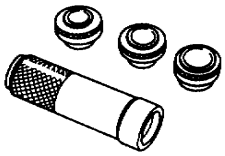
49 F401 366A Plate	A	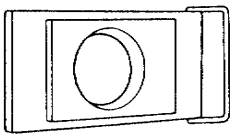
49 B092 373 Attachment G	A	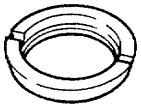

Downloaded from www.Manualslib.com manuals search engine

CLUTCH AND MANUAL TRANSAXLE (CONT'D)

TOOL NUMBER & DESCRIPTION	PRIORITY	ILLUSTRATION
49 0710 520 Puller bearing	A	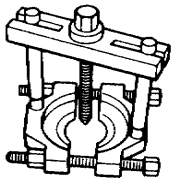
49 W032 2A0 Remover, bearing **NEW SST**	A	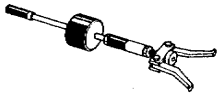
49 M005 561 Hanger, differential carrier	A	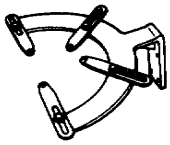
49 B027 002 Preload adapter	A	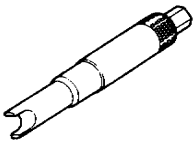
49 G030 338 Attachment E	A	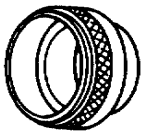
49 B017 102 Preload adapter	A	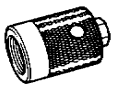

TOOL NUMBER & DESCRIPTION	PRIORITY	ILLUSTRATION
49 B027 003 Attachment M	A	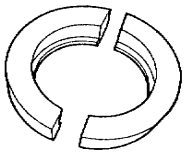
49 B092 374 Attachment H	A	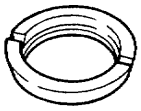
49 0259 720 Wrench, differential side bearing adjust nut	B	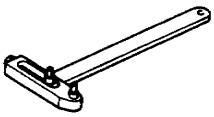
49 0727 570 Gauge body, pinion height adjust	A	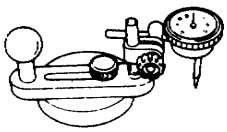
49 8531 555 Gauge block	A	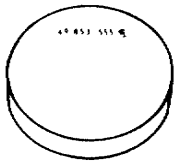
49 8531 565 Pinion model	A	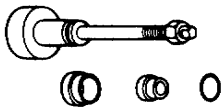

Downloaded from www.Manualslib.com manuals search engine

AUTOMATIC TRANSAXLE

TOOL NUMBER & DESCRIPTION	PRIORITY	ILLUSTRATION
49 G019 0A5A Shim selector set	A	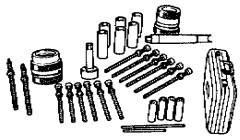
49 G019 011 Installer, bearing	A	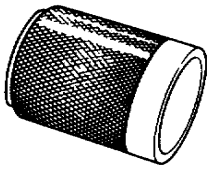
49 FT01 439 Holder, idle gear shaft	A	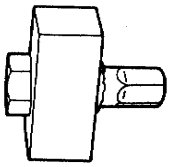
49 G019 013 Remover, bearing	A	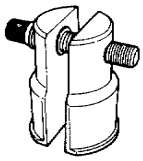
49 G019 022 Attachment K	A	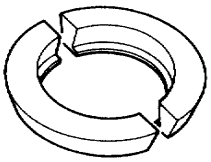
49 G019 0A2 Holder, turbine shaft	A	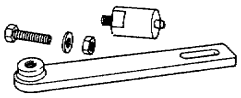

TOOL NUMBER & DESCRIPTION	PRIORITY	ILLUSTRATION
49 G019 012 Leak checker	A	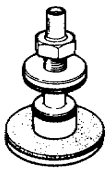
49 G019 017 Installer, oil seal	A	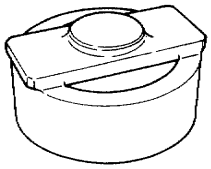
49 S120 785 Installer, dust boot	A	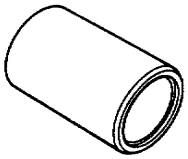
49 G019 0A7A Compressor set, return spring	A	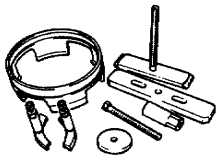
49 B019 901 Gauge, oil pressure	A	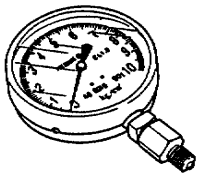
49 0378 400A Gauge set, oil pressure	A	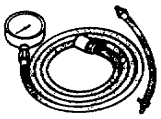

DIFFERENTIAL

TOOL NUMBER & DESCRIPTION	PRIORITY	ILLUSTRATION
49 N027 001 Gauge block	A	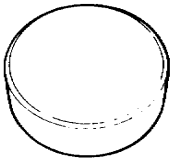

TOOL NUMBER & DESCRIPTION	PRIORITY	ILLUSTRATION
49 H033 101 Remover, bearing	A	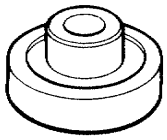

Downloaded from www.Manualslib.com manuals search engine

DIFFERENTIAL (CONT'D)

TOOL NUMBER & DESCRIPTION	PRIORITY	ILLUSTRATION
49 B001 795 Installer, oil seal	A	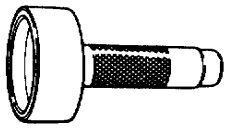
49 H027 002 Remover, bearing	A	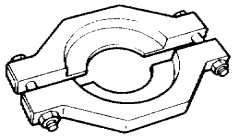

TOOL NUMBER & DESCRIPTION	PRIORITY	ILLUSTRATION
49 F027 005 Attachment ϕ62	A	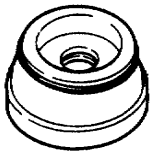
—	—	—

FRONT AND REAR AXLES

TOOL NUMBER & DESCRIPTION	PRIORITY	ILLUSTRATION
49 F027 007 Attachment ϕ72	A	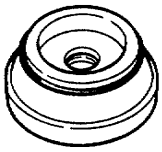
49 G030 727 Attachment A	A	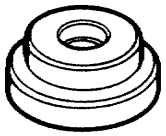
49 H034 201 Support block	A	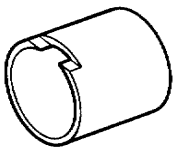
49 F027 009 Attachment ϕ68 and 77	A	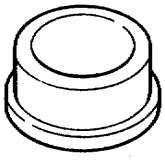

TOOL NUMBER & DESCRIPTION	PRIORITY	ILLUSTRATION
49 V001 795 Installer, oil seal	A	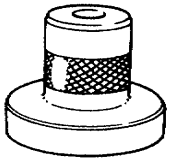
49 G033 102 Handle	A	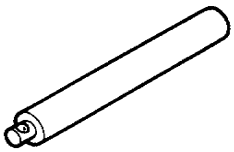
49 F026 103 Puller, wheel hub	A	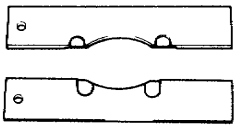
49 F026 102 Installer, bearing	A	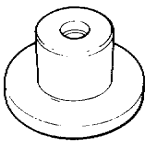

Downloaded from www.Manualslib.com manuals search engine

STEERING SYSTEM

TOOL NUMBER & DESCRIPTION	PRIORITY	ILLUSTRATION
49 0118 850C Puller, ball joint	B	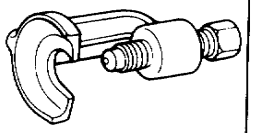
49 H002 671 Adapter	A	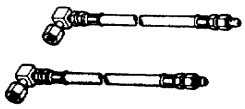
49 B032 323 Remover body, rod seal **NEW SST**	A	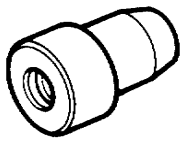
49 B032 309 Installer body, pinion seal	A	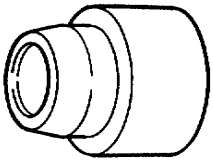
49 B032 306 Wrench, plug	A	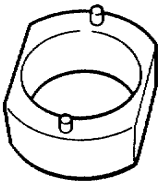
49 B032 327 Wrench, outer box **NEW SST**	A	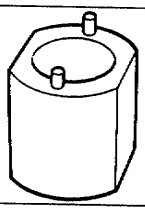
49 B032 310 Protector, pinion seal	A	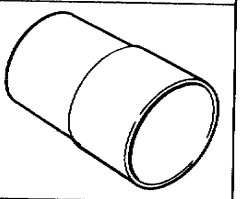
49 B032 311 Protector, slipper seal	A	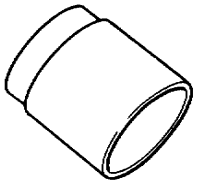

TOOL NUMBER & DESCRIPTION	PRIORITY	ILLUSTRATION
49 1232 670A Gauge set, power steering	A	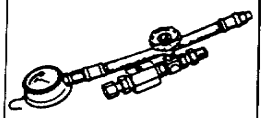
49 B032 304 Adapter	A	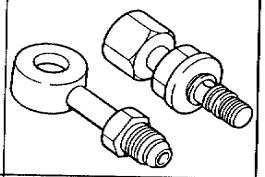
49 B032 314 Slipper seal former	A	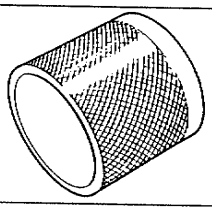
49 B032 315 Installer, oil seal	A	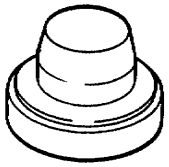
49 B032 316 Support block, plug	A	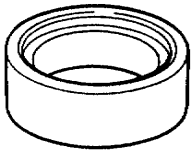
49 B032 325 Guide, rod seal	A	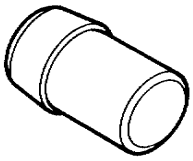
49 B032 320 Wrench	A	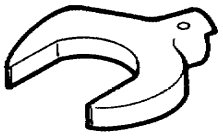
49 F032 303 Handle	A	

Downloaded from www.Manualslib.com manuals search engine

STEERING SYSTEM (CONT'D)

TOOL NUMBER & DESCRIPTION	PRIORITY	ILLUSTRATION
49 B032 324 Protector body, rod seal **NEW SST**	A	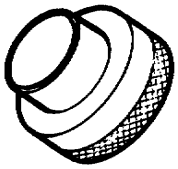
49 B032 321 Adapter	A	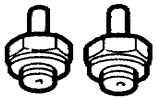
49 B032 312 Protector, slipper seal	A	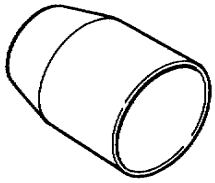
49 B032 326 Protector, outer box **NEW SST**	A	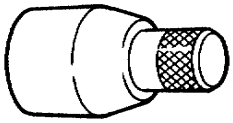

TOOL NUMBER & DESCRIPTION	PRIORITY	ILLUSTRATION
49 G032 317 House	A	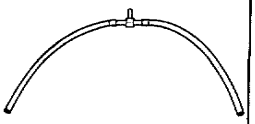
49 B032 305 Holder, power steering pump	A	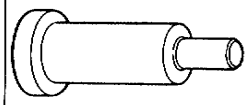
49 H032 301 Wrench	A	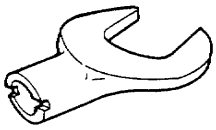
49 B032 317 Remover, bearing & oil seal	B	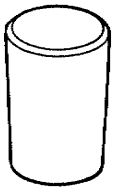

BRAKE SYSTEM

TOOL NUMBER & DESCRIPTION	PRIORITY	ILLUSTRATION
49 0259 770B Wrench, flare nut	A	
49 F043 001 Adjust gauge	A	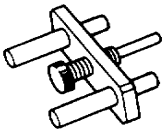
49 FA18 602 Wrench disc, brake piston	B	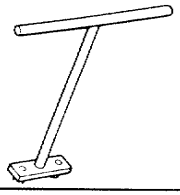

TOOL NUMBER & DESCRIPTION	PRIORITY	ILLUSTRATION
49 0221 600C Expand tool, disc brake	B	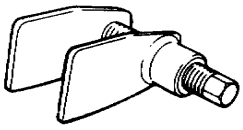
49 B043 002 Installer, bearing	A	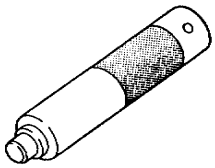
—	—	—

Downloaded from www.Manualslib.com manuals search engine

FRONT AND REAR SUSPENSIONS

TOOL NUMBER & DESCRIPTION	PRIORITY	ILLUSTRATION
49 1243 785 Installer, dust boot	A	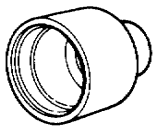
49 8038 785 Installer, dust boot	A	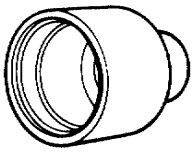
49 0180 510B Preload attachment	B	

TOOL NUMBER & DESCRIPTION	PRIORITY	ILLUSTRATION
49 G034 1A0 Compressor, coil spring	A	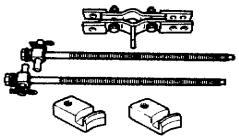
49 0208 701A Air out tool, boot	B	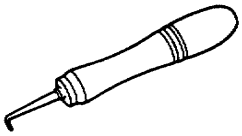
49 B034 2A0 Replacer, rubber bush	A	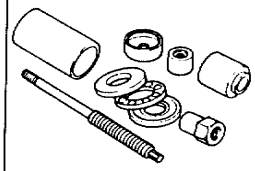

HEATER AND AIR CONDITIONER SYSTEMS

TOOL NUMBER & DESCRIPTION	PRIORITY	ILLUSTRATION
49 B061 005 Replacer, seal plate	A	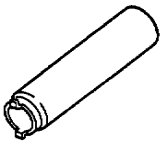

TOOL NUMBER & DESCRIPTION	PRIORITY	ILLUSTRATION
—	—	—

CHECKER AND OTHER EQUIPMENT

TOOL NUMBER & DESCRIPTION	PRIORITY	ILLUSTRATION
49 0839 285 Checker, fuel & thermometer	A	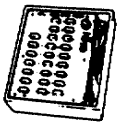
49 0259 866A Inserting tool, seal pusher & blade	B	

TOOL NUMBER & DESCRIPTION	PRIORITY	ILLUSTRATION
49 B019 905 Panel (EC-AT tester)	A	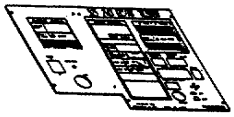
49 F019 901 Adapter harness (EC-AT tester)	A	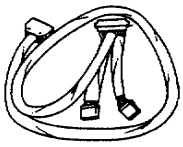

Downloaded from www.Manualslib.com manuals search engine

CHECKER AND OTHER EQUIPMENT (CONT'D)

TOOL NUMBER & DESCRIPTION	PRIORITY	ILLUSTRATION
49 0305 870A Tool set, window	A	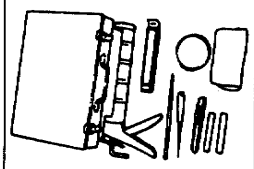
49 G019 901A EC-AT tester	A	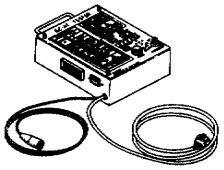
49 B019 9A1 EC-AT selector (EC-AT tester)	A	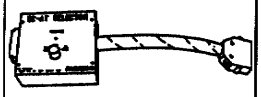
49 G019 901 EC-AT tester	A	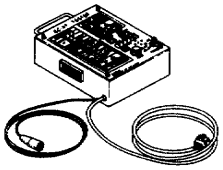
49 H019 902 Adapter unit (EC-AT tester)	A	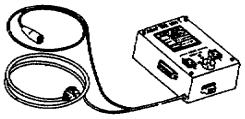
49 B019 904 Panel (EC-AT tester)	A	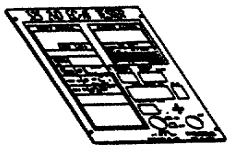
49 N018 001 Adapter harness (igniter checker)	A	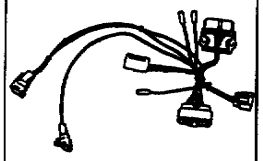

TOOL NUMBER & DESCRIPTION	PRIORITY	ILLUSTRATION
49 9200 162 Monitor, engine signal	A	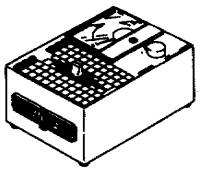
49 G018 903 Adapter harness (Engine signal monitor)	A	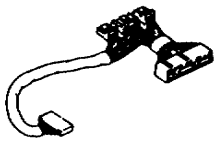
49 G018 904 Sheet (Engine signal monitor)	A	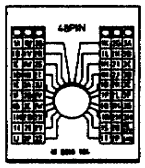
49 H018 9A1 Checker, self-diagnosis	A	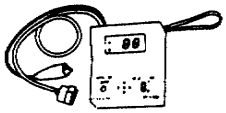
49 B019 9A0 System selector (Self-diagnosis checker)	A	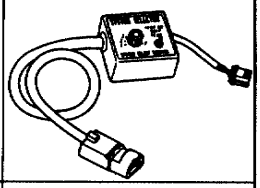
49 F018 002 Igniter checker	A	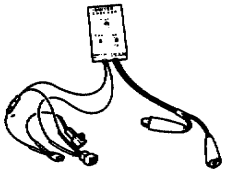
—	—	—

Downloaded from www.Manualslib.com manuals search engine

Downloaded from www.Manualslib.com manuals search engine

Mazda 323

2WD & 4WD

1990 Wiring Diagram

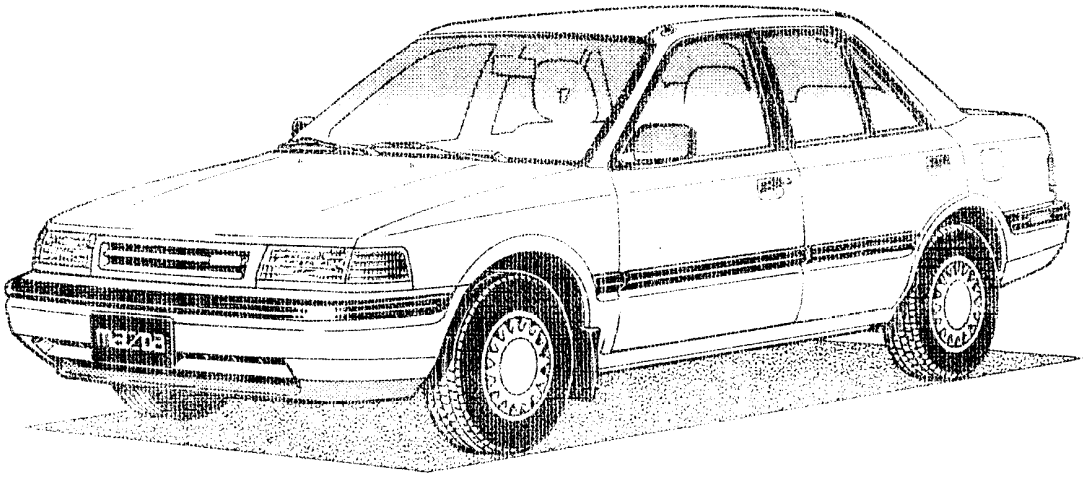

mazda

Downloaded from www.Manualslib.com manuals search engine

323
2WD & 4WD
Wiring Diagram

■ HOW TO USE THIS WIRING DIAGRAM ■ SYMBOLS IN THIS WIRING DIAGRAM ■ HOW TO READ ELECTRIC PARTS	Z–3
■ CIRCUIT DIAGRAM	Z–12
■ PARTS LOCATION ■ HARNESS DIAGRAM	Z–126

FOREWORD

This wiring diagram incorporates the wiring schematic for the basic vehicle and its available optional equipment. Actual vehicle wiring may vary slightly depending upon optional equipment and/or local specifications. All information contained in this booklet is based on the latest information available at the time of printing. Mazda Motor Corporation reserves the right to make changes without previous notice.

Mazda Motor Corporation
HIROSHIMA, JAPAN

This manual is applicable from the following Vehicle Identification Numbers (VIN).

4 DOOR SEDAN
JM1 BG223*LO 100001~
JM1 BG224*LO 100001~
JM1 BG225*LO 100001~
JM1 BG226*LO 100001~

4WD
JM1 BG227*LO 100001~
JM1 BG228*LO 100001~

3 DOOR HATCHBACK
JM1 BG231*LO 100001~
JM1 BG232*LO 100001~
JM1 BG233*LO 100001~
JM1 BG234*LO 100001~

© 1989 Mazda Motor Corporation

PRINTED IN JAPAN JUL '89 Ⓚ
5145-10-89G

Note:
This wiring diagram includes 1990 2WD and 4WD models and supersedes 1990 323 Wiring Diagram (5128-10-89E, 9999-95-019G-90).

Downloaded from www.Manualslib.com manuals search engine

SYSTEM INDEX

SYSTEM	PAGE
AUDIO	Z–122
BACK-UP LIGHTS	Z– 86
CARGO ROOM LAMP	Z–100
LENTER DIF-LOCK SYSTEM(4WD)	Z–118
CHARGING SYSTEM	Z– 16
CIGARETTE LIGHTER	Z–102
COOLING FAN SYSTEM	Z– 50
CRUISE CONTROL SYSTEM	Z–116
DAYTIME RUNNING LIGHTS	Z– 72
DIGITAL CLOK	Z–102
EC-AT CONTROL SYSTEM	Z– 54
ELECTRICAL WIRING SCHEMATIC	Z– 14
ENGINE CONTROL SYSTEM	Z– 18
FRONT WIPER & WASHER	Z– 62
HARNESS DIAGRAM	Z–127
HEADLIGHTS	Z– 68
HEATER & AIR CONDITIONER	Z– 90
HORN	Z– 86
HOW TO READ ELECTRIC PARTS	Z– 8
HOW TO USE THIS WIRING DIAGRAM	Z– 3
IGNITION KEY CYLINDER LAMP	Z– 98
ILLUMINATION LAMPS	Z– 78
INTER CONNECTING OF JOINT BOX	Z–124
INTERIOR & SPOT LAMPS	Z– 98
JOINT BOX	Z–125
JOINT CONNECTOR & GROUND CIRCUIT	Z–134
LICENSE PLATE LIGHTS	Z– 74
METER & WARNING LAMPS	Z– 58
PARTS INDEX	Z– 10
PARTS LOCATION	Z–126
PASSIVE SHOULDER BELT CONTROL SYSTEM	Z–112
POWER DOOR LOCK	Z–104
POWER SYSTEM	Z– 12
POWER WINDOW	Z–108
REAR WINDOW DEFROSTER	Z–102
REAR WIPER & WASHER	Z– 66
REMOTE CONTROL MIRROR	Z–106
SHIFT LOCK SYSTEM	Z– 84
SIDE MARKER LIGHTS	Z– 74
SLIDING SUNROOF	Z–120
SOUND WARNING SYSTEM	Z– 98
STARTING SYSTEM	Z– 16
STOP LIGHTS	Z– 84
TAIL LIGHTS	Z– 74
TURN & HAZARD FLASHER LIGHTS	Z– 82

Downloaded from www.Manualslib.com manuals search engine

The Way to View a Wiring Diagram

This Wiring Diagram is made up of circuit diagrams, connector diagrams, location diagrams, and harness diagrams.
The circuit diagrams are divided according to each system, and by using them, the wiring of each system's circuit can be understood.
Connector diagrams and location diagrams are divided according to vehicle harness, and the location diagrams are designed so that the connector locations and the circuit's course in the vehicle harnesses can be understood.
From the connector diagrams the connector shape and the arrangement of the pins used in the circuit diagrams can be understood.
In the circuit diagrams and the location diagrams, the different kinds of harnesses are colored differently, which makes easy distinguishing.
The harness diagrams on the last page can be understood to indicate the connector shape for each harness, the wiring color, and each part and each turning point in the vehicle.

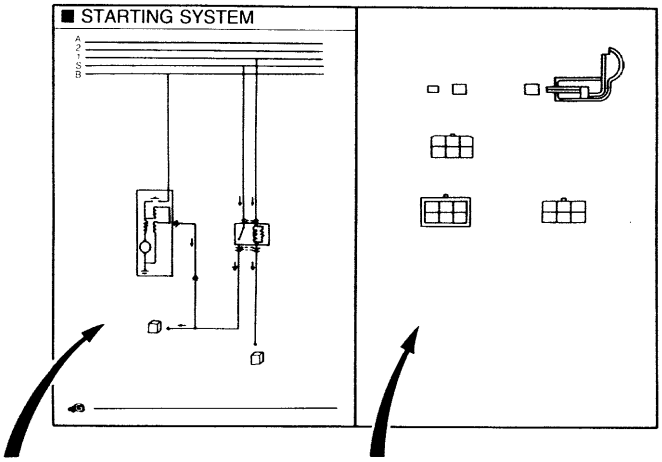

Circuit Diagram
Designed so that operation of electrical parts and the layout of the wiring may be understood.

Connector Diagram
Lists the connectors that are used in the circuit on the left page.
As a rule, it shows the connectors on the harness side.

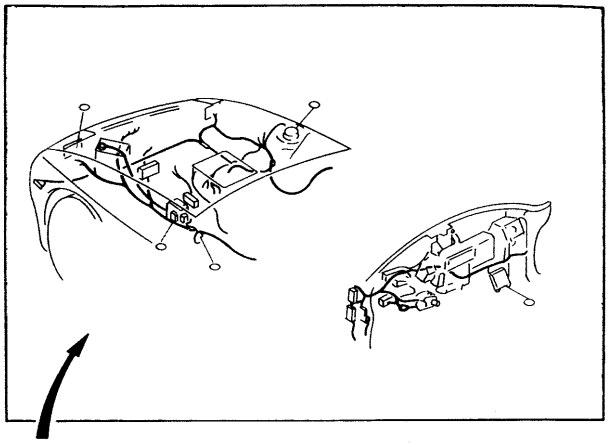

Location Diagram
This page illustrates the actual location of each connector and the routing diagram of the harness.

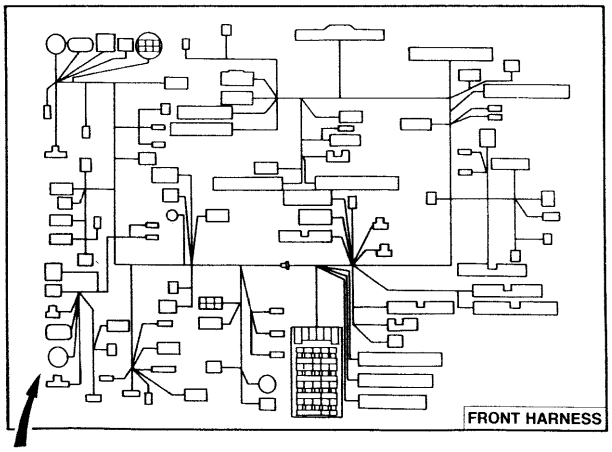

Harness Diagram
Indicate the connectors used in the circuit diagrams, arranging them according to each different kind of harness.

Downloaded from www.Manualslib.com manuals search engine

Z HOW TO USE THIS WIRING DIAGRAM

Overview of Power Source Diagrams and Ground Circuit Diagrams

The electrical power sources on the circuit are shown by designated code numbers. Therefore, by extending to the left the folding power source diagram, the power sources and fuse that are used be seen and understood at one glance.

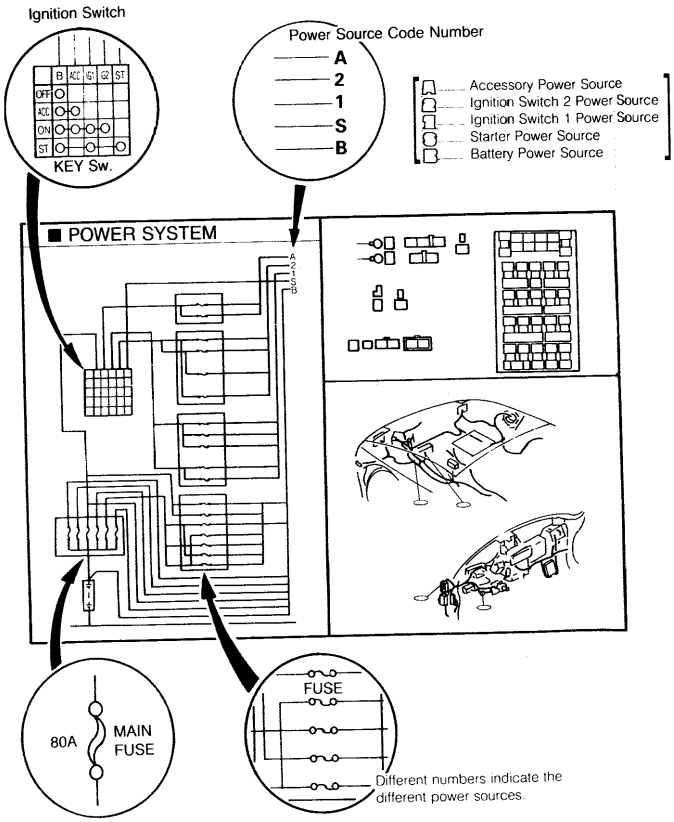

Here are listed together the fuses that have been designated for use in the vehicle.

The ground locations are shown on the diagram.

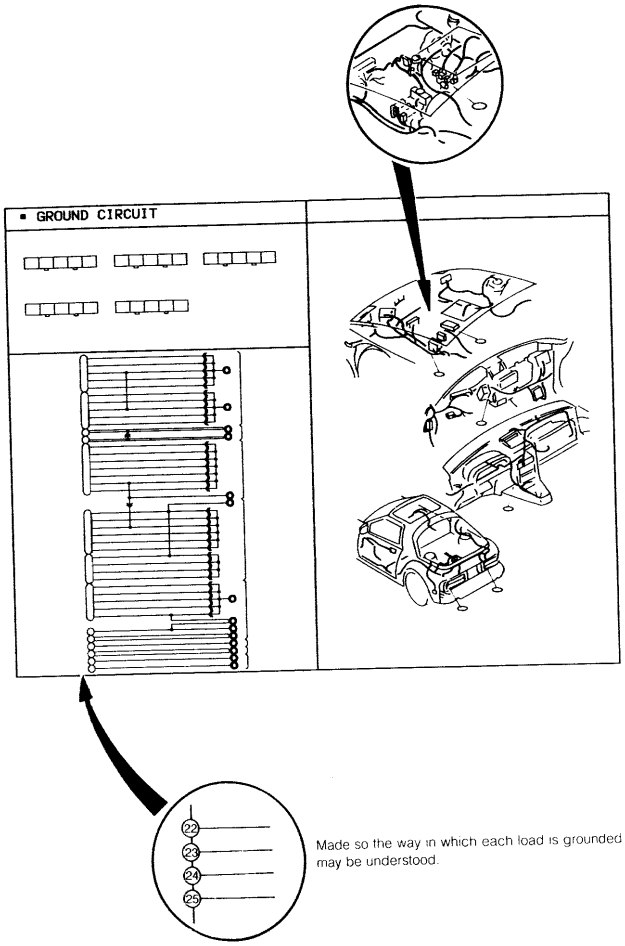

Made so the way in which each load is grounded may be understood.

Downloaded from www.Manualslib.com manuals search engine

Some Points to Remember When Viewing a Wiring Diagram

WIRING COLOR CODE

Two-color wires are indicated by a Two-letter symbol. The first letter indicates the base color of the wire and the second indicates the color of the stripe.

For example:

W/R is a white wire with a red strip

BR/Y is a brown wire with a yellow strip

CODE	COLOR	CODE	COLOR
B	Black	LG	Light green
BR	Brown	O	Orange
G	Green	R	Red
L	Blue	Y	Yellow
LB	Light blue	W	White
P	Pink	V	Violet
GY	Gray		

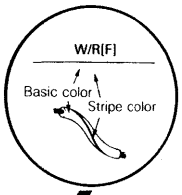

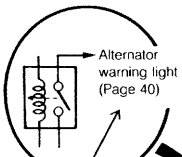

Legend in the parenthesis ( ) indicates the reference Page.

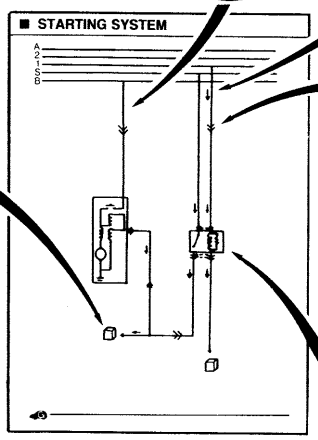

Direction of current is shown by the arrow

CONNECTOR AND NO.

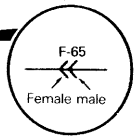

The connector numbers are dicided according to each kind of harness.

For example:

F-20	Front Harness
I-01	Instrument panel Harness
R-12	Rear Harness

Some Points to Remember When Viewing a Connector Diagram

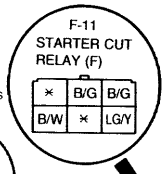

Connector numbers are written in sequence according to each harness, and the letter at the head of each code number indicates the kind of harness.

For example:

"F-11" stands for the 11th connector in the Front Harness.

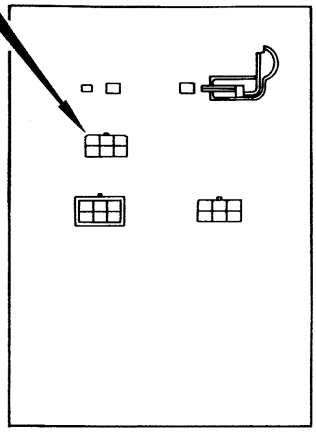

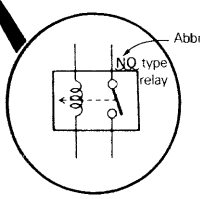

The NC (Normally Closed) type relay and switch are shown by "●", the NO (Normally Open) are shown by "○".

These are shown without operation in this book

The Way to View a Electrical Wiring Schematic

The electrical wiring schematic explains the outline of all the electrical parts in the vehicle. Also, it clarifies power line and the way to use each fuses.

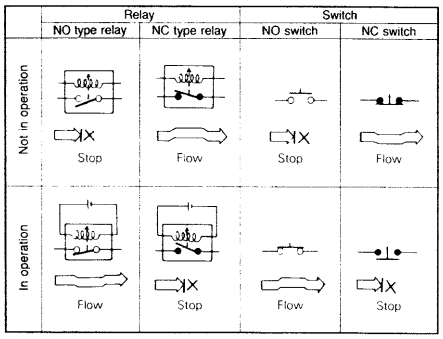

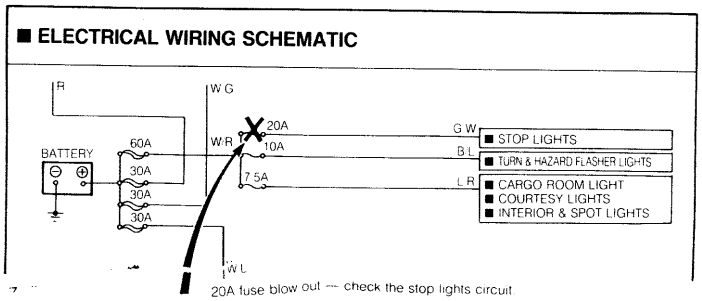

Downloaded from www.Manualslib.com manuals search engine

Z HOW TO USE THIS WIRING DIAGRAM

Some Points to Remember When Viewing a Location Diagram

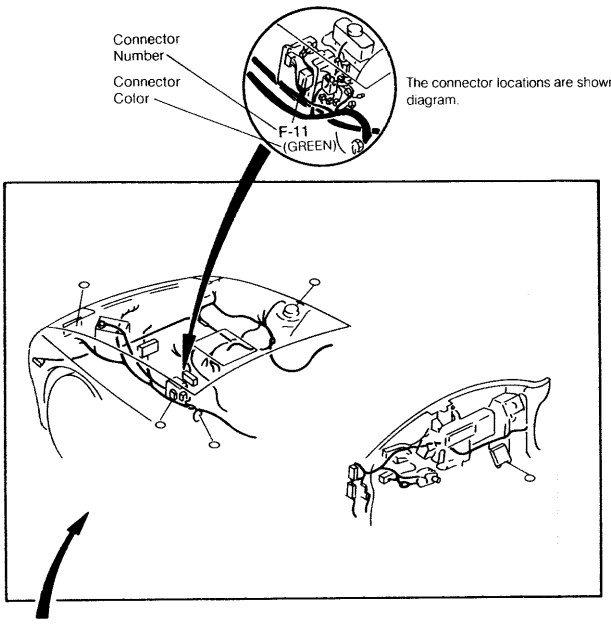

Connectors in circuit diagram are all described in location diagram, and connector numbers are shown by leader line.
Each frame has the alphabets and numerical numbers to search the connector easily.
For example:
"F-11" connector is across "E" on horizontal line and "7" on vertical line.
Connector Color:
Color is shown unless connector is white.

Some Points to Remember When Viewing a Harness Diagram

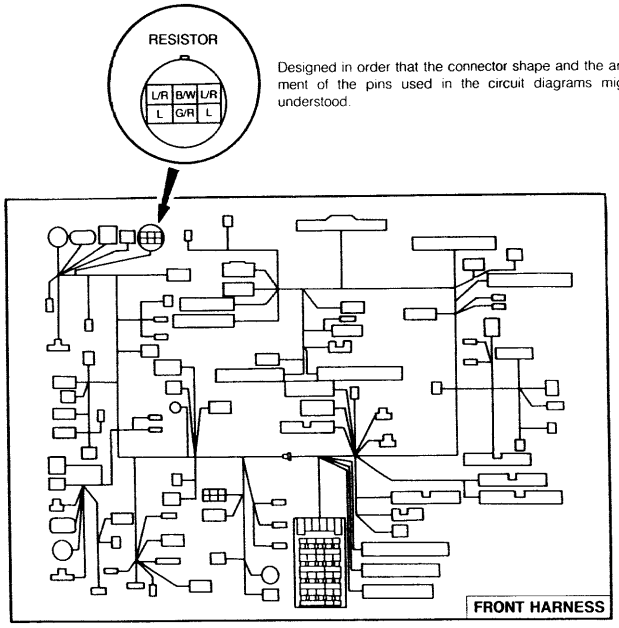

Designed in order that the connector shape and the arrangement of the pins used in the circuit diagrams might be understood.

The way of looking at a connector

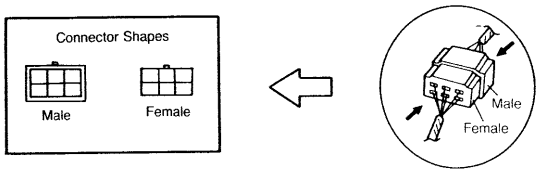

Downloaded from www.Manualslib.com manuals search engine

HOW TO USE THIS WIRING DIAGRAM

HARNESS SYMBOLS

Each harness is distinguished by a symbol to indicate to which harness belong a wiring and connector in circuit diagrams and connector charts.

DESCRIPTION OF HARNESS	COLOR	SYMBOL	DESCRIPTION OF HARNESS	SYMBOL
Front Harness	▬	[F]	Interior Lamp Harness	[IN]
Engine Harness	▬	[E]	Door No. 1 Harness	[DR1]
Instrument Panel Harness		[I]	Door No. 2 Harness	[DR2]
Rear Harness	▬	[R]	Door No. 3 Harness	[DR3]
Rear No. 2 Harness		[R2]	Door No. 4 Harness	[DR4]
Rear No. 3 Harness		[R3]	Air Conditioner Harness	[AC]
Emission Harness		[EM]		

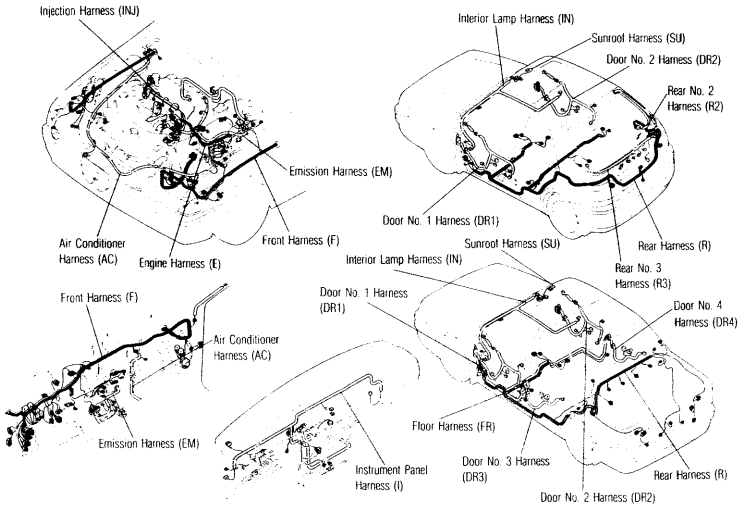

EXAMPLE OF CIRCUIT DIAGRAM

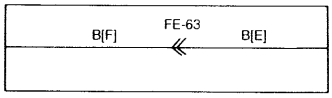

- It is seen from the above that the male-side black line of the FE-63 shows the engine harness and the female-side black line shows the front harness.
- It is seen from the above that the FE-63 connector is a connector connecting the engine and the front.

EXAMPLE OF CONNECTOR

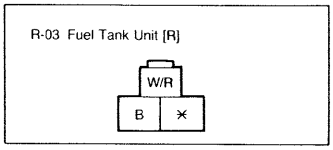

- This sign (•) means "empty" – Not Used.
- It is seen from the above that this connector R-03 is on the Rear harness.

SYMBOLS IN THIS WIRING DIAGRAM

SYMBOLS IN THIS WIRING DIAGRAM

LOGICAL SYMBOLS

The logical symbols are of four kinds: OR, AND, INV. (Inverter), PROCESS.
The circuit operation can be easily read by understanding these symbols.

OR	In case of input to wither A or B, an output comes out from C. When a and B are off (0V), C is off (0V). When either A or B is on (12V), C is on (12V). This can be simply shown in the relay circuit on the right-hand side.	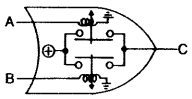
AND	In case on input to both A and B, an output comes out from C. When A and B are on (12V), C is on (12V). When wither A or B is off (0V), C is off (0V). This can be simply shown in the relay circuit on the right-hand side.	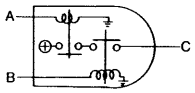
INV. (Inverter) 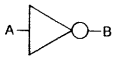	In case of input to A, B is grounded. When A is off (0V), B is on (12V). When A is on (12V), B is off (0V). This can be simply shown in the relay circuit on the right-hand side.	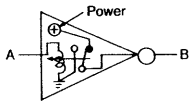
	PROCESS makes a simplified representation of complicated functions of the circuit. Functions mainly used: 1. Detection of signals 2. Conversion of signals The process of the full transistor ignition control unit is as shown in the right-hand figure.	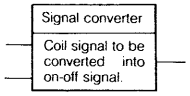

GRAPHIC SYMBOLS

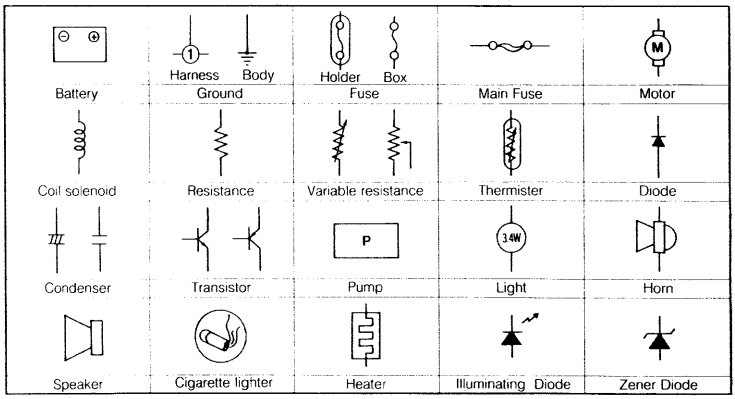

Downloaded from www.Manualslib.com manuals search engine

Z WIRING DIAGRAM

ABBREVIATIONS

ABBREVIATIONS USED IN THIS BOOKLET

A	Ampere
AAS	Auto Adjusting Suspension
ABS	Anti-lock Brake System
ACV	Air Control Valve
AE	Acoustic Equilibration
AIS	Air Injection System
ALL	Automatic Load Leveling
AS	Auto Stop
ASV	Air Supply Valve
A/C	Air Conditioner
A/F	Air Fuel
A/R	Auto Reverse
A/T	Automatic Transmission
ACC	Accessory
ACCEL	Accelerator
ADD	Additional
ALT	Alternator
AM	Amplitude Modulation
AMP	Amplifier
ANT	Antenna
ATP	Atmospheric Pressure
ATX	Automatic Transaxle
B	Battery
BAC	By-pass Air Control Valve
B/L	Bi-Level
CPU	Central Processing Unit
CSD	Cold Start Device
CARB	Carburator
CCT	Circuit
CIGAR	Cigarette
COMBI	Combination
CON	Conditioner
CONT	Control
DOHC	Double Over Head Camshaft
DEF	Defroster
ECE	Economic Commission For Europe
EGI	Electric Gasoline Injection
EGR	Exhaust Gas Recirculation
EGRP	Exhaust GAS Recirculation Pressure Sensor
ELR	Emergency Locking Retructor
ELEC	Electric
ETR	Electronic Tuner
EXH	Exhaust
F	Front
FICB	Fast Idle Cam Breaker
FL	Front Left
FR	Front Right
F/B	Feed Back
F/I	Fuel Injector
FM	Frequency Modulation
GEN	Generator
HEI	High Energy Ignition
H/D	Heat/Defroster
HEAT	Heater
HI	High
ISC	Idle Speed Control
IG	Ignition
ILLUMI	Illumination
INT	Intermittent
JB	Joint Box
LH	Left Hand
LCD	Liquid Crystal Display
LO	Low
LW	Low Wave
M	Motor
MIL	Mulfanction Indicator Light
MTR	Mechanical Tuning Radio
M/T	Manual Transmission
MI	Middle
MIN	Minute
MIX	Mixture
MPX	Multiplex
MTX	Manual Transaxle
MW	Middle Wave
NC	Normally Closed
NO	Normally Open
OD	Over Drive
P	Power
PRCV	Pressure Regulator Control Solenoid Valve
PTC	Positive Temperature Coefficient Heater
P/S	Power Steering
PRG	Purge Solenoid Valve
QSS	Quick Start System
R	Rear
RH	Right Hand
RL	Rear Left
RPM	Revolution Per Minute
RR	Rear Right
REC	Recirculation
SOL	Solenoid
SQ	Square Per Milimeter
ST	Start
SW	Short Wave
SW	Switch
TCV	Twin Scrol Turbocharger Solenoid Valve
TICS	Triple Induction Control System
TEMP	Temperature
TR	Transistor
TWS	Total Wiring System
V	Volt
VRIS	Variable Resonance Induction System
VENT	Ventiration
VOL	Volume
W	Watt

Z HOW TO READ ELECTRIC PARTS

AN OVERVIEW OF ELECTRICAL COMPONENTS

Following is an overview of electrical components representative of the many electrical components related to the control and warning instruments in automobiles.

DIODE

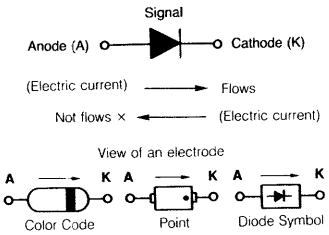

The nature of diode is to allow a current to flow in only one direction. It is used in a circuit when desiring to let current flow in only one direction, or as a rectifier when changing an alternating current to a direct current.
The different terminals of a diode are called anode (A) and cathode (K). Electric current flows from anode to cathode, but never from cathode to anode.

In checking a diode with a tester be careful about the tester's polarity. The tester's (−) means positive electrical potential, and (+) means negative electrical potential. To check a diode's current, Touch the tester's (−) lead to the anode, and the tester's (+) lead to the cathode.

ILLUMINATING DIODE

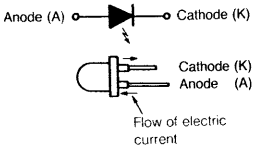

An illuminating diode emits light from the contact surface of a semiconductor when an electric current flows in its forward direction.

In setting the two battery in tester for the 10kΩ range, touch the tester's (−) lead to the anode (A), and the (+) lead to the cathode (K), it lights up.

Downloaded from www.Manualslib.com manuals search engine

RESISTOR

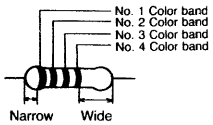

As resistors are essential to make an electric circuit. Reading the resistance value of the widely used resistor is explained below.

Color Band / Color	No. 1 Value	No. 2 Value	No. 3 Multiplier	No. 4 Clearance
Black	0	0	$\times 10^0$	
Brown	1	1	$\times 10^1$	
Red	2	2	$\times 10^2$	
Orange	3	3	$\times 10^3$	
Yellow	4	4	$\times 10^4$	
Green	5	5	$\times 10^5$	
Blue	6	6	$\times 10^6$	
Purple	7	7	$\times 10^7$	
Gray	8	8	$\times 10^8$	
White	9	9	$\times 10^9$	
Gold			$\times 10^{-1}$	±5%
Silver			$\times 10^{-2}$	±10%
Non				±20%

As shown in the chart at left, there are four color bands to represent resistances. Each resistance value can be understood from each color band
For example:

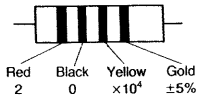

The resistance value is 200kΩ ±5%.

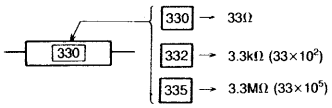

Code number clarification
The first two digits in each code number represent the resistance value, and the third digit represents multiplier.
For example:

$332 \rightarrow 33\times10^2(\Omega) \rightarrow 3.3\times10^3(\Omega) \rightarrow 3.3(k\Omega)$

CONDENSER

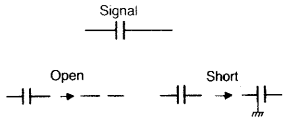

A Condenser is for storing electricity.
In the case of an open circuit, a condenser is not able to store electric charge. And the circuit remains in an open state.
A short circuit, its name indicate, means the break-down phenomena when voltage is applied.

Inspection of low voltage condenser with circuit tester
(1) Short a condenser and discharge the remaining electric charge
(2) Set ×10kΩ; largest resistance range in the circuit tester
(3) When the test lead touches both ends, the indicate moves a little bit and then returns to ∞ (Ω)

TRANSISTOR

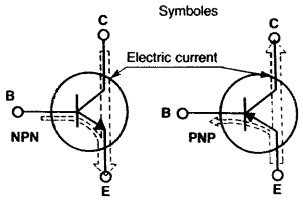

There are two types of transistor function:
(1) Switching ..... Acting a switch
(2) Amplification action ..... Amplifying a small signal to a big signal

Transistors are classified according to polarity (structure): NPN and PNP
Generally, the NPN are widely used.
Transistor has three terminals: Emitter (E), Collector (C), and Base (B).

To operate the transistor, make a base current flow to the arrow direction (B to E). Then the resistance between the collector and the emitter becomes extremely small, and large current flows from the collector to the emitter (In the case of PNP transistor, electric current flows to th emitter to the collector).

Electrodes indication

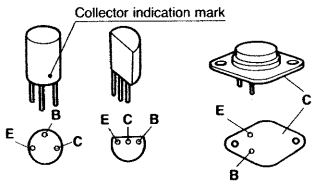

Name of Models

2 S C 828 A
- A — Revision Mark (Starts from A)
- 828 — Resistration Number
- C — Polarity and Usage
  - A ... PNP, for high frequency
  - B ... PNP, for low frequency
  - C ... NPN, for high frequency
  - D ... NPN, for low frequency
- S — Semiconductor element
- 2 — Number of terminals

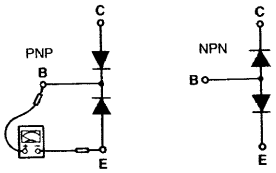

- Current Flow only C to B
- Current Flow only B to C
- Current Flow only E to B
- Current Flow only B to E

A simply way of checking
PNP and NPN transistor can be symplified shown in diagrams on the left-hand side.
Set ×100Ω or 1kΩ. resistance measurement range in the circuit tester, and touch leads to each electrode to check conductivity.

Downloaded from www.Manualslib.com manuals search engine

PARTS INDEX

PARTS	PAGE
Ⓐ A/C Relay	Z-90, 94
A/C Switch	Z-90, 94
Actuator	Z-116
Airflow Meter	Z-30, 46
Alternator	Z-16
Audio	Z-122
Ⓑ Back-up Light	Z-86, 88
Back-up Light Switch	Z-86, 88
Battery	Z-12
Blower Motor	Z-90, 94
Blower Switch	Z-90, 94
Brake Fluid Switch	Z-58
Buckle Switch	Z-98, 112
Ⓒ Cargo Room Lamp	Z-100
Cargo Room Lamp Switch	Z-100
Cassette Deck	Z-122
Center Dif-Lock Motor	Z-118
Center Dif-Lock Switch	Z-118
Cigarette Lighter	Z-102
Circuit Opening Relay	Z-18, 34
Clutch Switch	Z-30, 46
Combination Switch (Light Switch)	Z-68, 70
Condenser	Z-18, 34
Condenser Fan	Z-90, 94
Condenser Fan Relay	Z-90, 94
Cooling Fan Motor	Z-50, 52
Cooling Fan Relay	Z-50, 52
Cruise Control Main Switch	Z-116
Cruise Control Switch	Z-116
Cruise Control Unit	Z-116
Ⓓ Daytime Running Light Control Unit	Z-72
Daytime Running Light Relay	Z-72
Daytime Running Light Resistor	Z-72
Diagnosis Connector	Z-18, 34
Digital Clock	Z-102
Diode	Z-90, 94
Distributor	Z-26, 42
Door Catch Switch	Z-112
Door Speaker	Z-122
Door Switch	Z-98
Ⓔ EC-AT Control Unit	Z-54
Engine Control Unit	Z-18, 22, 26, 30, 34, 38, 42, 46
Ⓕ Flasher Unit	Z-82
4×4 Control Unit	Z-118
Front Side Marker Light	Z-74
Front Turn Light	Z-82
Front Washer Motor	Z-62, 64
Front Wiper Motor	Z-62, 64
Front Wiper Relay	Z-64
Front Wiper Switch	Z-62, 64
Fuel Tank Unit	Z-18, 34
Fuse Box	Z-12, 16
Ⓗ Hazard Switch	Z-82
Headlight	Z-68, 70
Headlight Relay	Z-54
High Mount Stop Light	Z-84
Hold Switch	Z-54
Horn	Z-86, 88
Horn Relay	Z-86, 88
Horn Switch	Z-86, 88
Ⓘ Igniter	Z-18, 34
Ignition Coil	Z-18, 34
Ignition Key Cylinder Lamp	Z-98
Ignition Key Reminder Switch	Z-98
Ignition Switch	Z-12
Illumination Lamp	Z-78
Inhibitor Switch	Z-16, 54
Injector	Z-26, 42
Interior Lamp	Z-98
ISC Valve	Z-26, 42
Ⓛ License Plate Light	Z-74
Limit Switch	Z-112
Ⓜ Magnetic Clutch	Z-90, 94
Main Fuse	Z-12
Main Relay (Fuel Inj)	Z-16, 34
Meter	Z-58
Ⓝ Neutral Switch	Z-30, 46
Ⓞ Oil Pressure Switch	Z-58
Oxygen Sensor	Z-22, 38
Ⓟ Panel Light Control	Z-78
Parking Brake Switch	Z-58
Passive Shoulder Belt Control Unit	Z-112
Passive Shoulder Belt Motor	Z-112
Power Door Lock Motor	Z-104
Power Door Lock Relay	Z-104
Power Door Lock Switch	Z-104
Power Steering Pressure Switch	Z-22, 38
Power Window Main Switch	Z-108
Power Window Motor	Z-108
Power Window Switch	Z-108
Ⓡ Radio	Z-122
Rear Side Marker Light	Z-74
Rear Speaker	Z-122
Rear Turn Light	Z-82
Rear Washer Motor	Z-64
Rear Washer Switch	Z-64
Rear Window Defroster	Z-102
Rear Window Defroster Switch	Z-102
Rear Wiper Motor	Z-64
Rear Wiper Switch	Z-64
Refrigerant Pressure Switch	Z-90, 94
Remote Control Mirrior Motor	Z-106
Remote Control Mirrior Switch	Z-106
Resistor Assembly	Z-90, 94
Ⓢ Shift Lock Unit	Z-84
Short Connector	Z-50, 52, 118

Downloaded from www.Manualslib.com manuals search engine

PARTS INDEX

PARTS	PAGE
Sliding Sunroof Motor	Z-120
Sliding Sunroof Relay	Z-120
Sliding Sunroof Switch	Z-120
Solenoid Valve	
EC-AT	Z-54
Pressure Regulator	Z-26, 42
Purge Control	Z-26, 42
VICS	Z-26
Spot Lamp	Z-98
Starter	Z-16
Starter Interlock Switch	Z-16
Stop Light	Z-84
Stop Light Switch	Z-84, 116
Sub Fuel Tank Unit	Z-34
Ⓣ Tail Light	Z-74
Tail Light Relay	Z-70
Thermo Switch	Z-90, 94
Throttle Sensor	Z-30, 46
Turn Switch	Z-82
Ⓦ Washer Level Sensor	Z-58
Water Thermosensor	Z-26, 42, 58
Water Thermo Switch	Z-50, 52, 94

Downloaded from www.Manualslib.com manuals search engine

■ POWER SYSTEM

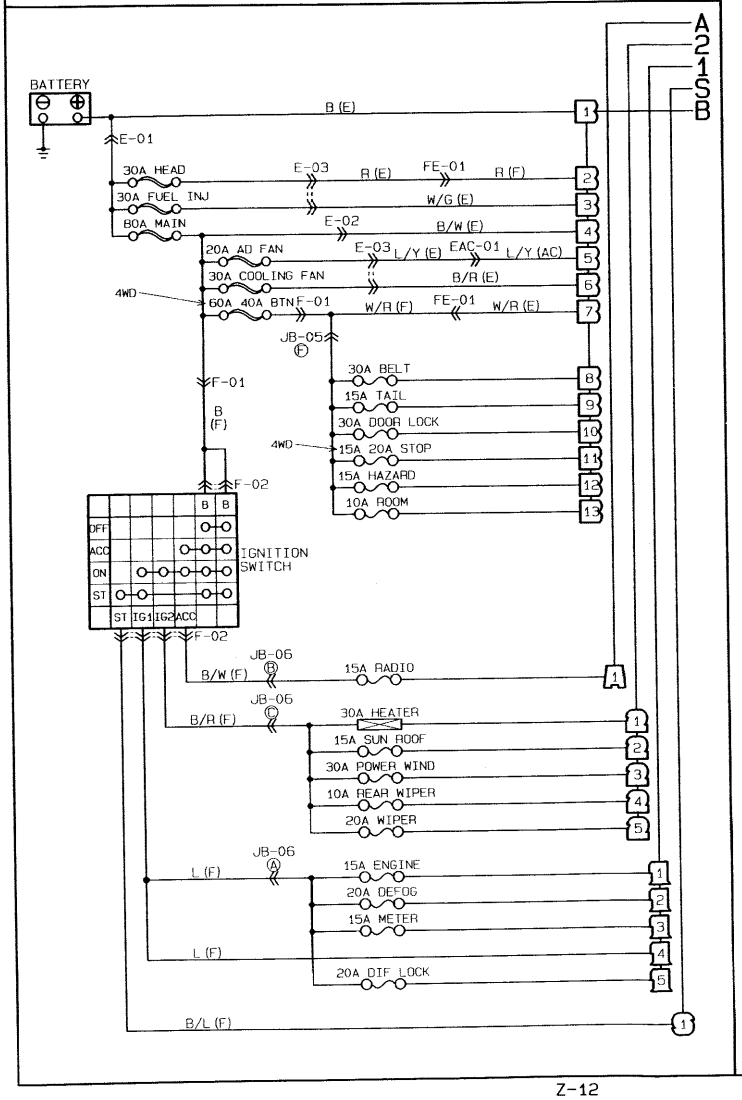

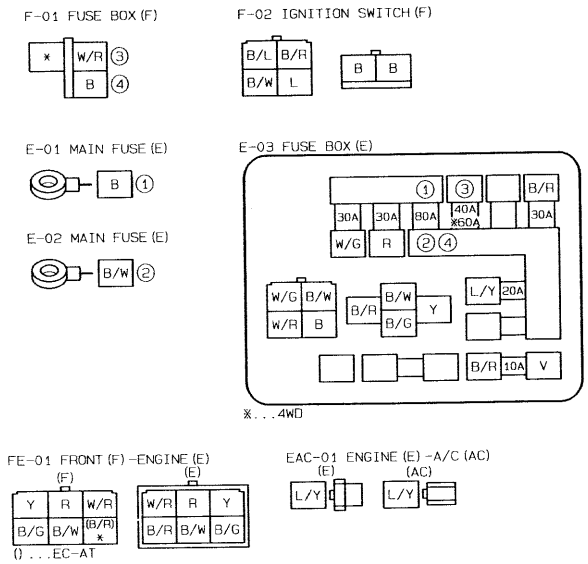

Downloaded from www.Manualslib.com manuals search engine

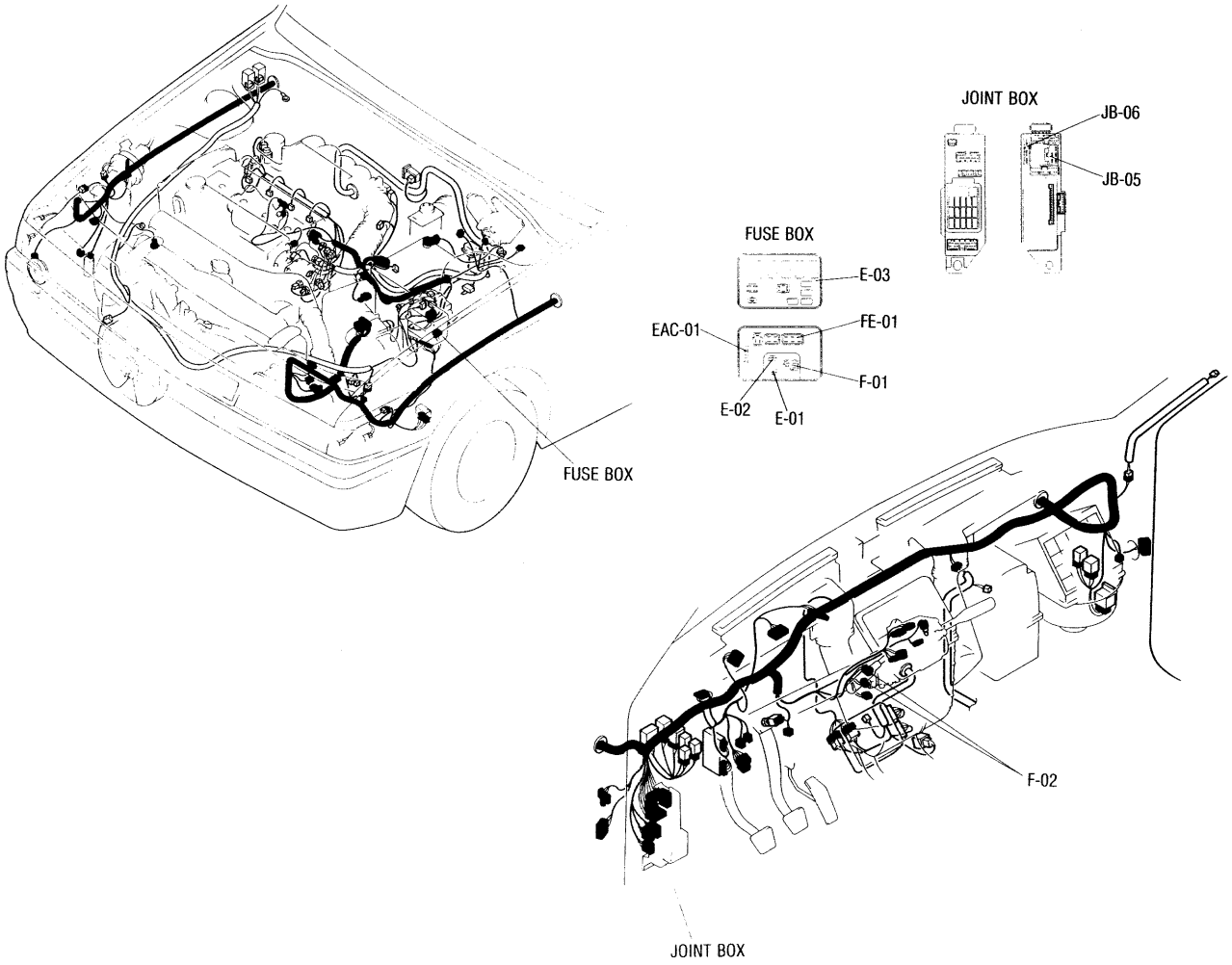

Downloaded from www.Manualslib.com manuals search engine

Z WIRING DIAGRAM

EXCEPT 4WD

■ELECTRICAL WIRING SCHEMATIC

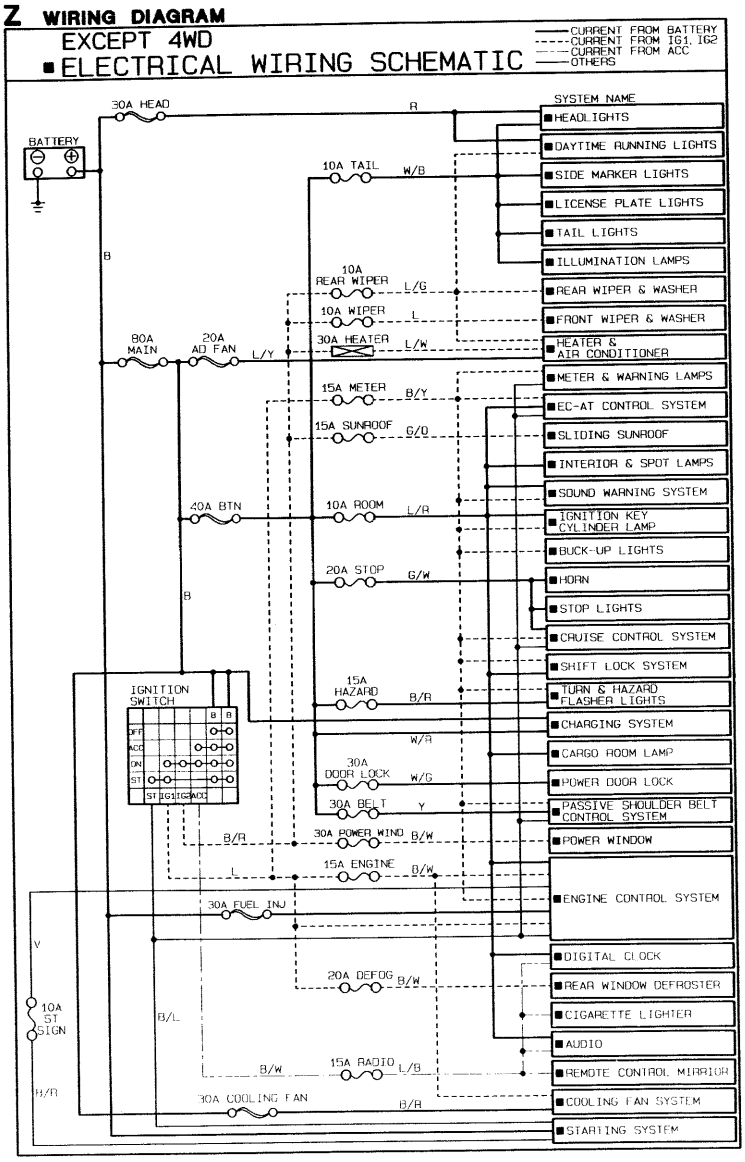

Downloaded from www.Manualslib.com manuals search engine

4WD
■ELECTRICAL WIRING SCHEMATIC

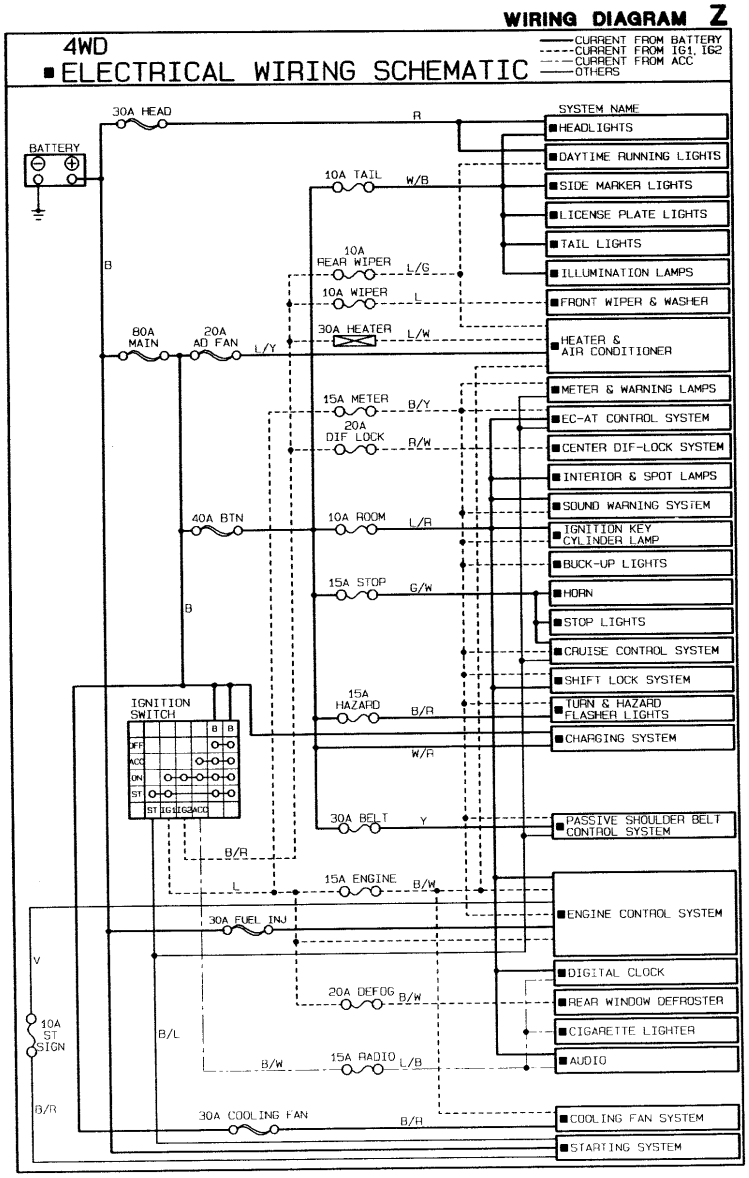

Downloaded from www.Manualslib.com manuals search engine

WIRING DIAGRAM

- STARTING SYSTEM
- CHARGING SYSTEM

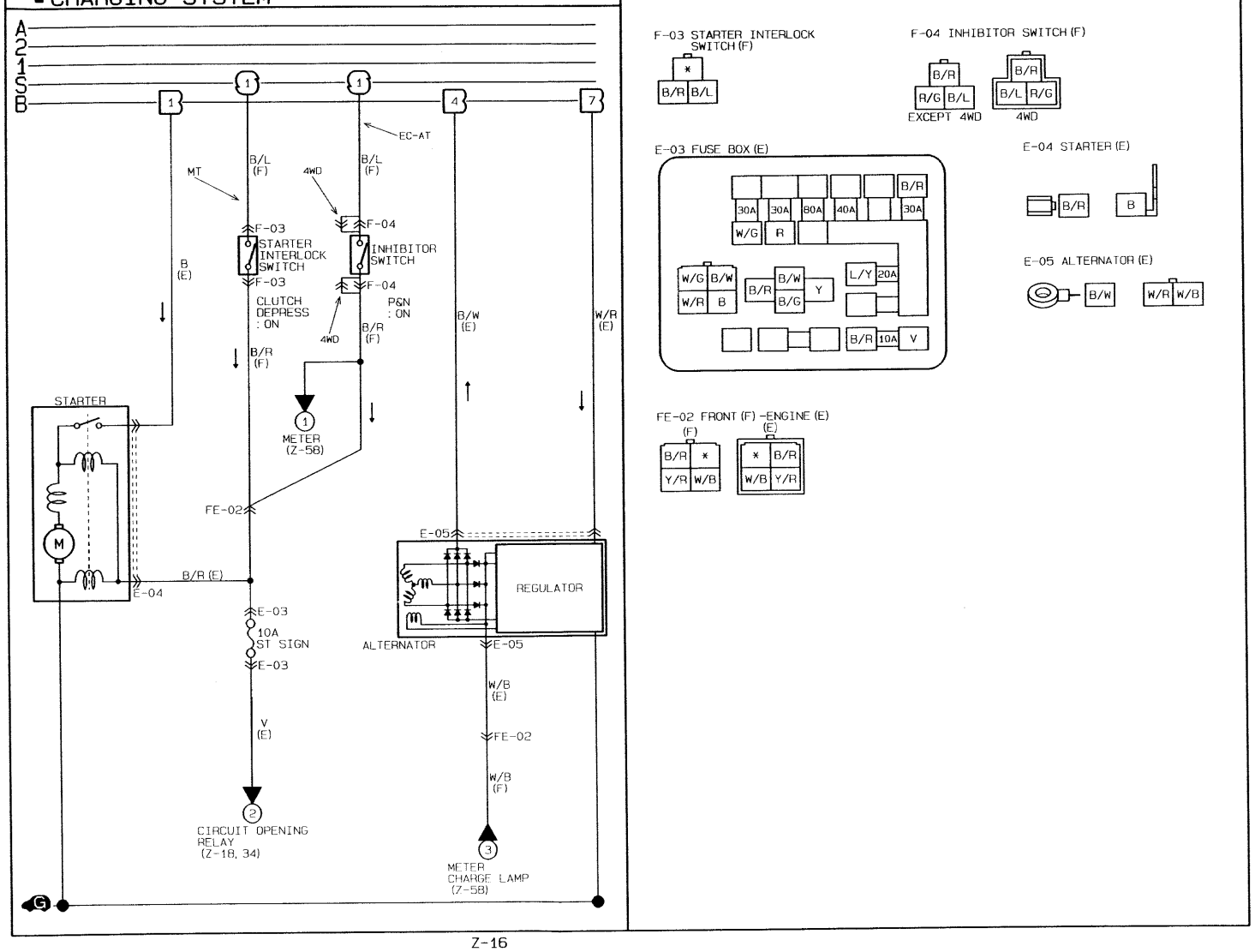

Downloaded from www.Manualslib.com manuals search engine

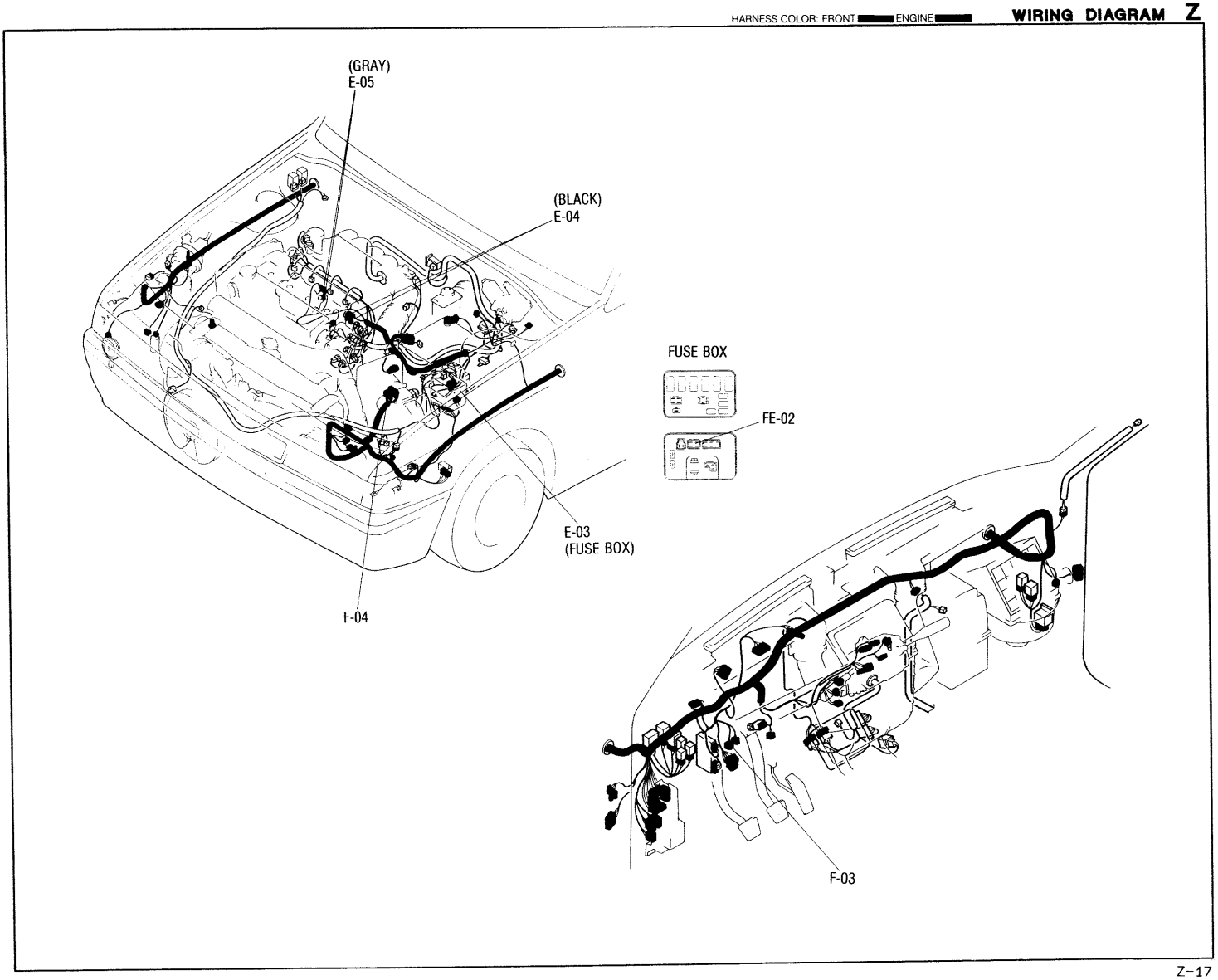

Downloaded from www.Manualslib.com manuals search engine

EXCEPT 4WD ■ENGINE CONTROL SYSTEM (1/4)

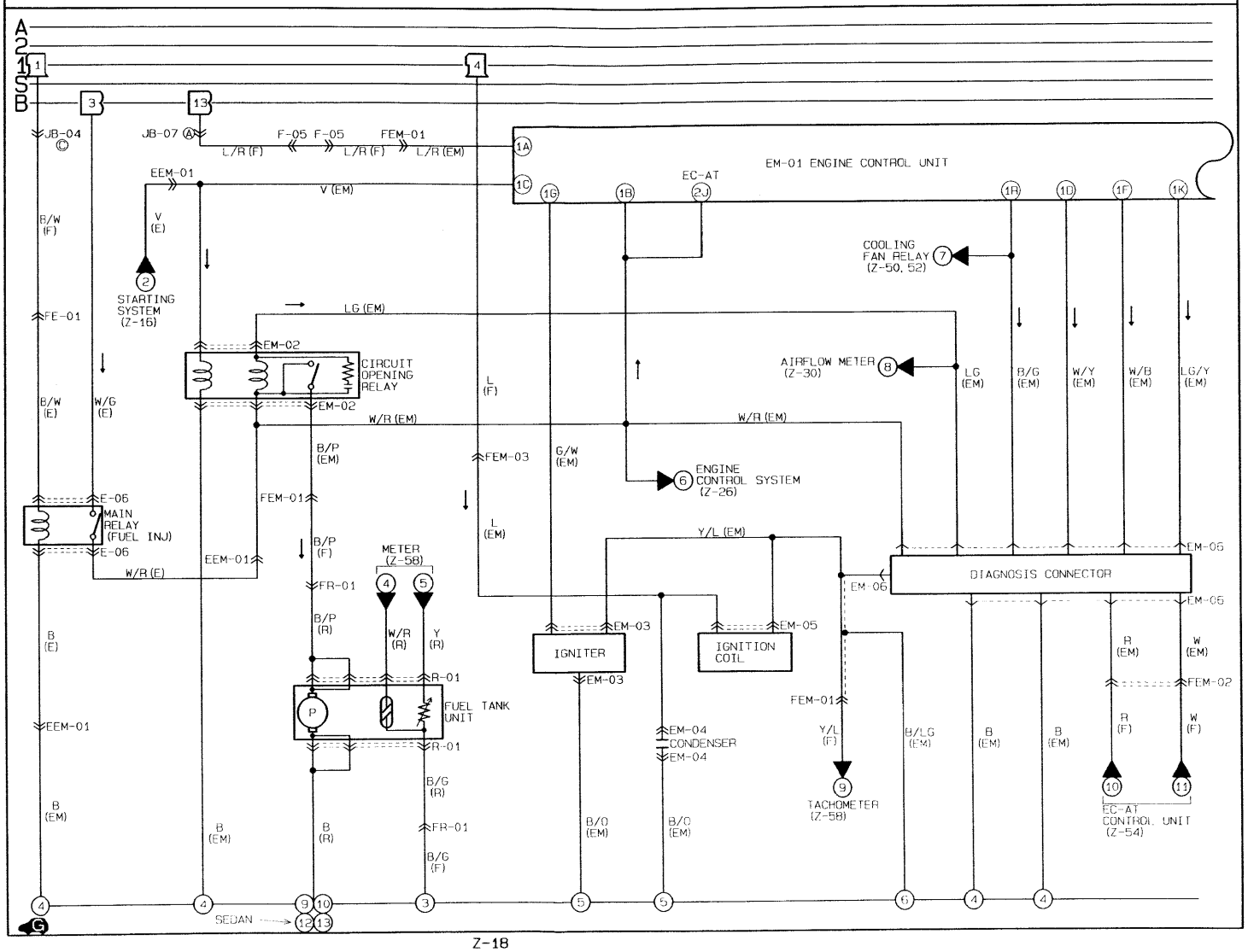

Downloaded from www.Manualslib.com manuals search engine

F-05 JOINT CONNECTOR (F)

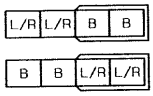

E-06 MAIN RELAY (E)
(FUEL INJ)

EM-01 ENGINE CONTROL UNIT (EM)

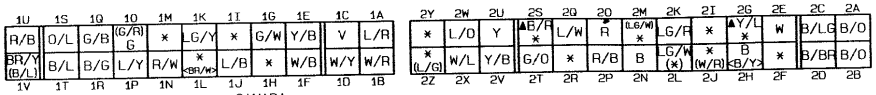

() . . .EC-AT ▲. . .DOHC <>. . .CANADA

EM-02 CIRCUIT
OPENING RELAY (EM)

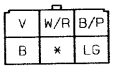

EM-03 IGNITER (EM)

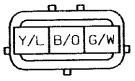

EM-04 CONDENSER (EM)

EM-05 IGNITION COIL (EM)

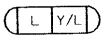

EM-06 DIAGNOSIS CONNECTOR (EM)

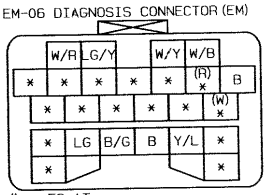

() . . .EC-AT

R-01 FUEL TANK UNIT (R)

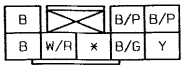

FEM-01 FRONT (F) -EMISSION (EM)

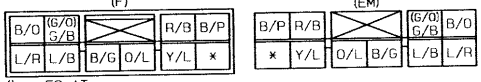

() . . .EC-AT

FEM-02 FRONT (F) -EMISSION (EM)

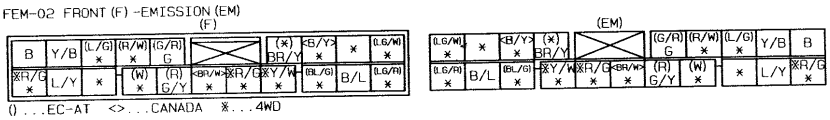

() . . .EC-AT <>. . .CANADA ※. . .4WD

FEM-03 FRONT (F) -EMISSION (EM)

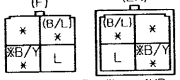

() . . .EC-AT ※. . .4WD

FE-01 FRONT (F) -ENGINE (E)

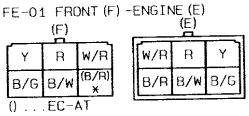

() . . .EC-AT

EEM-01 ENGINE (E) -EMISSION (EM)

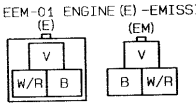

FR-01 FRONT (F) -REAR (R)

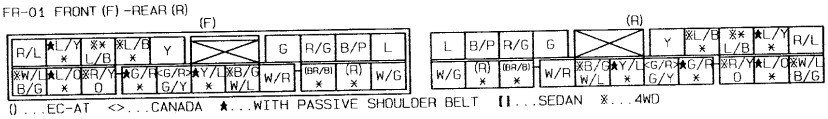

() . . .EC-AT <>. . .CANADA ★. . .WITH PASSIVE SHOULDER BELT [ ] . . .SEDAN ※. . .4WD

Downloaded from www.Manualslib.com manuals search engine

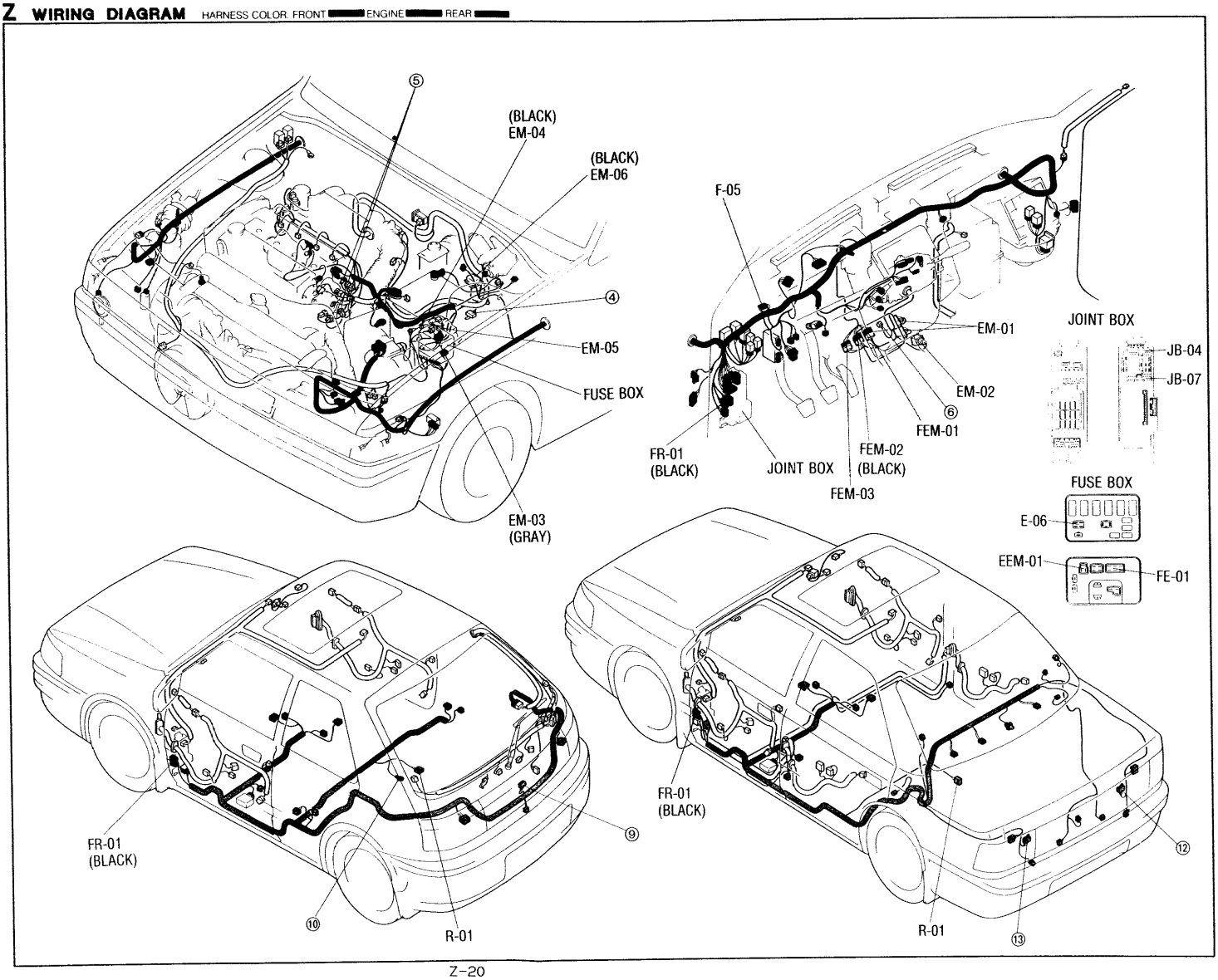

Downloaded from www.Manualslib.com manuals search engine

Engine control unit terminal (unit side)

2Y	2W	2U	2S	2Q	2O	2M	2K	2I	2G	2E	2C	2A	1U	1S	1Q	1O	1M	1K	1I	1G	1E	1C	1A
2Z	2X	2V	2T	2R	2P	2N	2L	2J	2H	2F	2D	2B	1V	1T	1R	1P	1N	1L	1J	1H	1F	1D	1B

Terminal	Input	Output	Connection to	Test condition		Correct voltage	Remark
1A	—	—	Battery	Constant		Approx. 12V	For backup
1B	○		Main relay (FUEL INJ relay)	Ignition switch	OFF	Approx. 0V	—
					ON	Approx. 12V	
1C	○		Ignition switch (START)	While cranking		Approx. 10V	—
				Ignition switch ON		Approx. 0V	
1D		○	Self-Diagnosis Checker (Monitor lamp)	Test switch at "SELF-TEST" Lamp illuminated for 3 sec. after ignition switch OFF→ON		Approx. 5V	With Self-Diagnosis Checker and System Selector
				Lamp not illuminated after 3 sec.		Approx. 12V	
				Test switch at "O_2 MONITOR" at idle Monitor lamp illuminated		Approx. 5V	
				Test switch at "O_2 MONITOR" at idle Monitor lamp illuminated		Approx. 12V	
1F		○	Self-Diagnosis Checker (Code Number)	Buzzer sounded for 3 sec. after ignition switch OFF→ON		Below 2.5V	• With Self-Diagnosis Checker and System Selector • With System Selector test Selector at "SELF-TEST"
				Buzzer not sounded after 3 sec.		Approx. 12V	
				Buzzer sounded		Below 2.5V	
				Buzzer not sounded		Approx. 12V	
1G		○	Igniter	Ignition switch ON		Approx. 0V	—
				Idle		Approx. 0.2V	
1K	○		Diagnosis connector (TEN terminal)	System selector test switch at "O_2 MONITOR"		Approx. 12V	—
				System selector test switch at "SELF-TEST"		Below 1.0V	
1R	○		Fan switch	Fan operating (Engine coolant temperature over 91°C (196°F). CANADA, 97°C (207°F). USA or diagnosis connector terminal TFA grounded)		Below 1.0V	—
				Fan not operating (Idle)		Approx. 12V	
2J	○		Open (MTX)	Constant		Approx. 0V	—
			Main relay (FUEL INJ relay) (ATX)	Ignition switch ON		Approx. 12V	

Downloaded from www.Manualslib.com manuals search engine

EXCEPT 4WD ■ENGINE CONTROL SYSTEM (2/4)

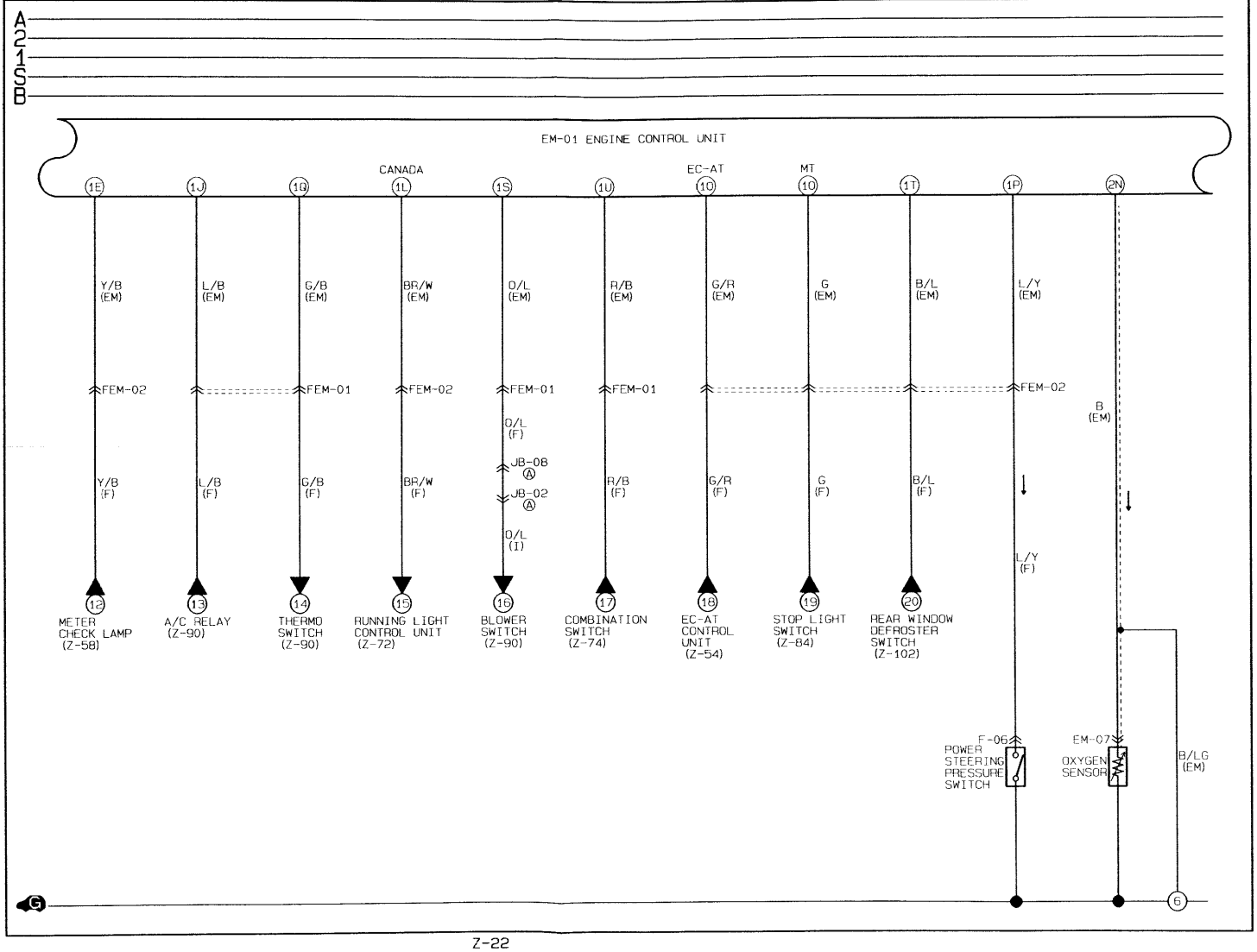

Downloaded from www.Manualslib.com manuals search engine

F-06 POWER STEERING PRESSURE SWITCH (F)

EM-01 ENGINE CONTROL UNIT (EM)

1U	1S	1Q	1O	1M	1K	1I	1G	1E	1C	1A
R/B	O/L	G/B	(G/R) G	*	LG/Y	*	G/W	Y/B	V	L/R
BR/Y (B/L)	B/L	B/G	L/Y	R/W	* <BR/W>	L/B	*	W/B	W/Y	W/R
1V	1T	1R	1P	1N	1L	1J	1H	1F	1D	1B

2Y	2W	2U	2S	2Q	2O	2M	2K	2I	2G	2E	2C	2A
*	L/O	Y	▲B/R *	L/W	R	(LG/W) *	LG/R	*	▲Y/L *	W	B/LG	B/O
* (L/G)	W/L	Y/B	G/O	*	R/B	B	LG/W (*)	* (W/R)	B <B/Y>	*	B/BR	B/O
2Z	2X	2V	2T	2R	2P	2N	2L	2J	2H	2F	2D	2B

() . . .EC-AT ▲. . .DOHC <>. . .CANADA

EM-07 OXYGEN SENSOR (EM)

FEM-01 FRONT (F) -EMISSION (EM)

(F)

B/O	(G/O) G/B			R/B	B/P
L/R	L/B	B/G	O/L	Y/L	*

(EM)

B/P	R/B			(G/O) G/B	B/O
*	Y/L	O/L	B/G	L/B	L/R

() . . .EC-AT

FEM-02 FRONT (F) -EMISSION (EM)

(F)

B	Y/B	(L/G) *	(R/W) *	(G/R) G			(*) BR/Y	<B/Y> *	*	(LG/W) *	
※R/G *	L/Y	*	(W) *	(R) G/Y	<BR/W> *	※R/G *	※Y/W *	(BL/G) *	B/L	(LG/R) *	

(EM)

(LG/W) *	*	<B/Y> *	(*) BR/Y			(G/R) G	(R/W) *	(L/G) *	Y/B	B	
(LG/R) *	B/L	(BL/G) *	※Y/W *	※R/G *	<BR/W> *	(R) G/Y	(W) *	*	L/Y	※R/G *	

() . . .EC-AT <>. . .CANADA ※. . .4WD

Downloaded from www.Manualslib.com manuals search engine

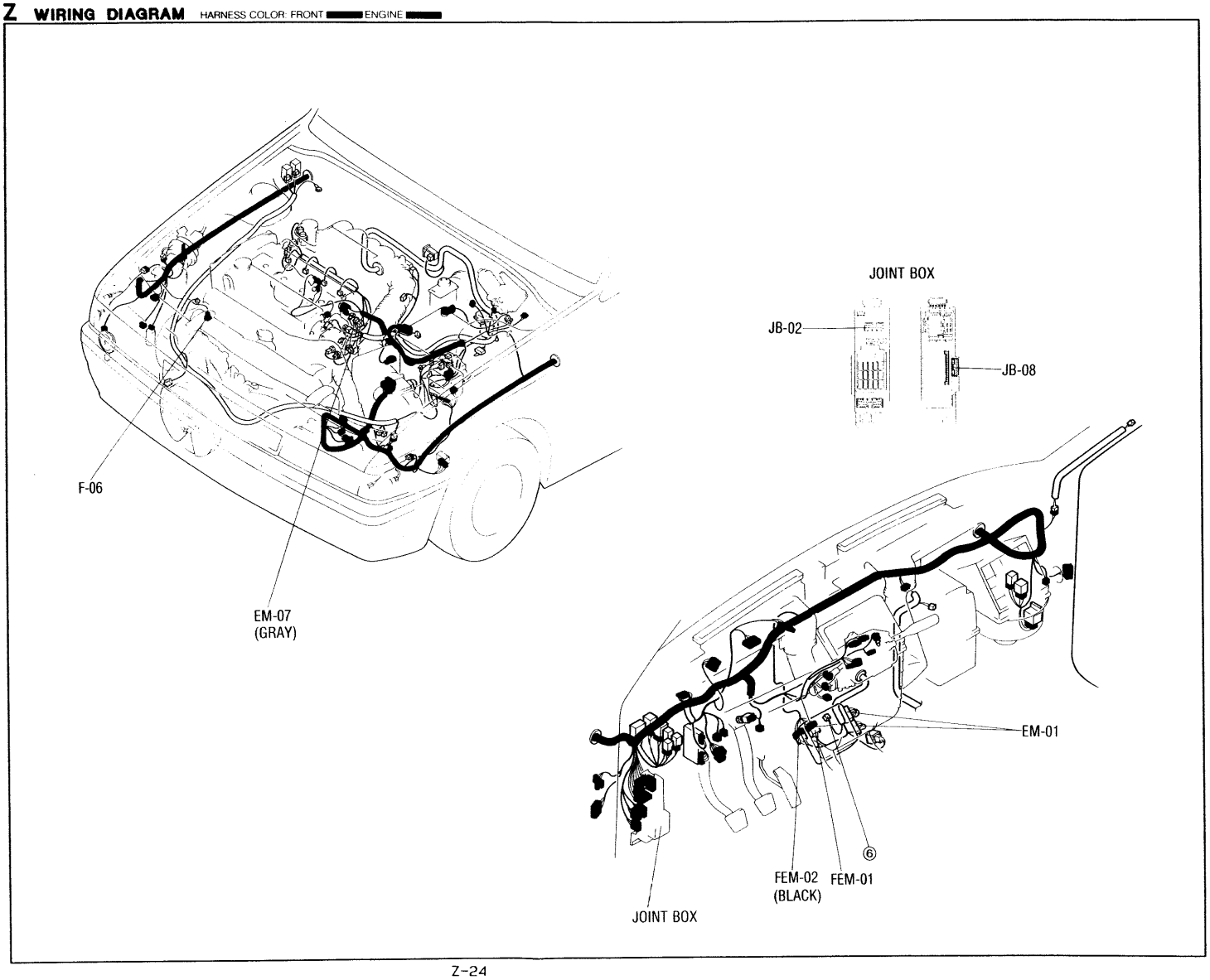

Downloaded from www.Manualslib.com manuals search engine

Engine control unit terminal (unit side)

2Y	2W	2U	2S	2Q	2O	2M	2K	2I	2G	2E	2C	2A	1U	1S	1Q	1O	1M	1K	1I	1G	1E	1C	1A
2Z	2X	2V	2T	2R	2P	2N	2L	2J	2H	2F	2D	2B	1V	1T	1R	1P	1N	1L	1J	1H	1F	1D	1B

Terminal	Input	Output	Connection to	Test condition	Correct voltage	Remark
1E		○	Malfunction indicator lamp (MIL)	Lamp illuminated for 3 sec. after ignition switch OFF→ON	Below 2.5V	With System Selector test switch at "SELF-TEST"
				Lamp not illuminated after 3 sec.	Approx. 12V	
				Lamp illuminated	Below 2.5V	
				Lamp not illuminated	Approx. 12V	
1J		○	A/C relay	Ignition switch ON	Approx. 12V	—
				A/C switch ON at idle	Below 2.5V	
				A/C switch OFF at idle	Approx. 12V	
1L	○		DRL relay (Canada)	Parking brake pulled with ignition switch ON (DRL OFF)	Approx. 12V	•DRL: Daytime Running Light
				Idle (DRL ON)	Below 2.5V	
1O	○		Stoplight switch/ EC-AT control unit (ATX)	Brake pedal released	Below 1.0V	—
				Brake pedal depressed	Approx. 12V	
1P	○		P/S pressure switch	Ignition switch ON	Approx. 12V	—
				P/S ON at idle	Below 1.0V	
				P/S OFF at idle	Approx. 12V	
1Q	○		A/C switch	A/C switch ON	Below 2.5V	Ignition switch ON and blower motor ON
				A/C switch OFF	Approx. 12V	
1S	○		Blower control switch	Blower control switch OFF or 1st position	Approx. 12V	Ignition switch ON
				Blower control switch 2nd or more position	Below 1.0V	
1T	○		Rear window defroster switch	Rear window defroster switch OFF	Below 1.0V	Ignition switch ON
				Rear window defroster switch ON	Approx. 12V	
1U	○		Headlight switch	Headlights ON	Approx. 12V	—
				Headlights OFF	Below 1.0V	
2N	○		Oxygen sensor	Ignition switch ON	0V	—
				Idle (Cold engine)	0V	
				Idle (After warm-up)	0–1.0V	
				Increase engine speed (After warm-up)	0.5–1.0V	
				Deceleration	0–0.4V	

Downloaded from www.Manualslib.com manuals search engine

EXCEPT 4WD ■ENGINE CONTROL SYSTEM (3/4)

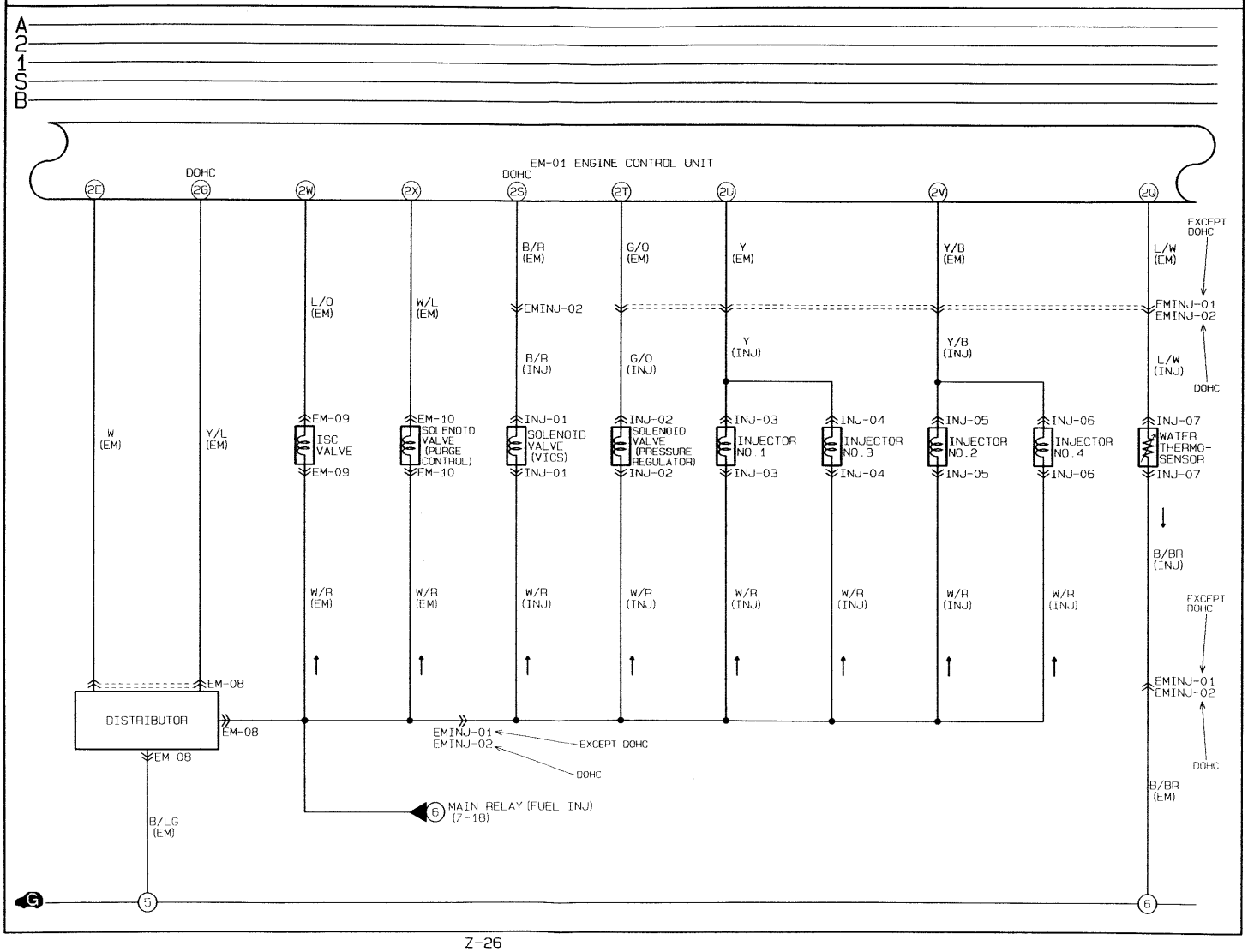

Downloaded from www.Manualslib.com manuals search engine

EM-01 ENGINE CONTROL UNIT (EM)

1U	1S	1Q	1O	1M	1K	1I	1G	1E	1C	1A
R/B	O/L	G/B	(G/R) G	*	LG/Y	*	G/W	Y/B	V	L/R
BR/Y (B/L)	B/L	B/G	L/Y	R/W	* <BR/W>	L/B	*	W/B	W/Y	W/R
1V	1T	1R	1P	1N	1L	1J	1H	1F	1D	1B

2Y	2W	2U	2S	2Q	2O	2M	2K	2I	2G	2E	2C	2A
*	L/O	Y	▲B/R *	L/W	R	(LG/W) *	LG/R	*	▲Y/L *	W	B/LG	B/O
* (L/G)	W/L	Y/B	G/O	*	R/B	B	LG/W (*)	* (W/R)	B <B/Y>	*	B/BR	B/O
2Z	2X	2V	2T	2R	2P	2N	2L	2J	2H	2F	2D	2B

() . . . EC-AT ▲. . . DOHC <> . . . CANADA

EM-08 DISTRIBUTOR (EM)

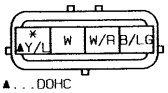

▲. . . DOHC

EM-09 ISC VALVE (EM)

EM-10 SOLENOID VALVE (PURGE CONTROL) (EM)

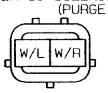

INJ-01 SOLENOID VALVE (VICS) (INJ)

INJ-02 SOLENOID VALVE (PRESSURE REGULATOR) (INJ)

INJ-03 INJECTOR NO.1 (INJ)

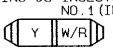

INJ-04 INJECTOR NO.3 (INJ)

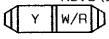

INJ-05 INJECTOR NO.2 (INJ)

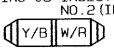

INJ-06 INJECTOR NO.4 (INJ)

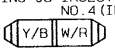

INJ-07 WATER THERMOSENSOR (INJ)

EMINJ-01 EMISSION (EM) - INJECTOR (INJ)

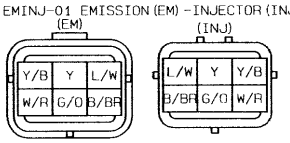

EMINJ-02 EMISSION (EM) - INJECTOR (INJ)

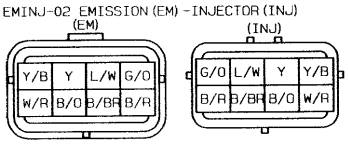

Downloaded from www.Manualslib.com manuals search engine

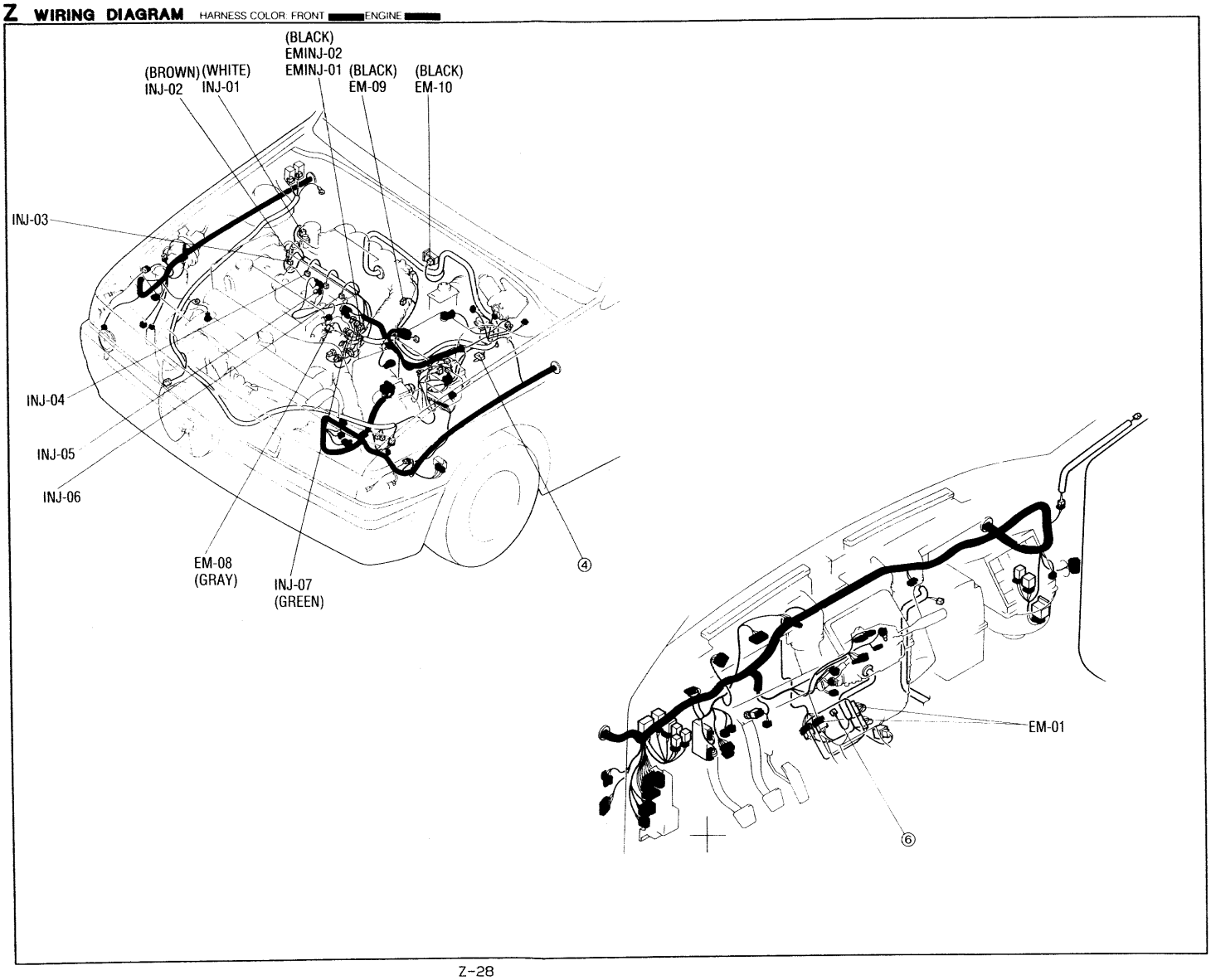

Downloaded from www.Manualslib.com manuals search engine

Engine control unit terminal (unit side)

2Y	2W	2U	2S	2Q	2O	2M	2K	2I	2G	2E	2C	2A	1U	1S	1Q	1O	1M	1K	1I	1G	1E	1C	1A
2Z	2X	2V	2T	2R	2P	2N	2L	2J	2H	2F	2D	2B	1V	1T	1R	1P	1N	1L	1J	1H	1F	1D	1B

Terminal	Input	Output	Connection to	Test condition	Correct voltage	Remark
2E	○		Distributor (Ne-signal)	Ignition switch ON	Approx. 0V or 5V	—
				Idle	Approx. 2V	
2G	○		Distributor (G-signal) [DOHC]	Ignition switch ON	Approx. 0V or 5V	
				Idle	Approx. 1.5V	
2Q	○		Water thermo-sensor	Engine coolant temperature 20°C (68°F)	Approx. 2.5V	
				After warm-up	Below 0.5V	
2S		○	Solenoid valve (VICS)	Engine speed below 5,000 rpm	Below 1.5V	• VICS: Variable Inertia Charging System
				Engine speed above 5,000 rpm	Approx. 12V	
2T		○	Solenoid valve (Pressure regulator) (BP)	60 seconds after engine started when engine coolant temperature above 90°C (194°F) and intake air temperature above 58°C (136°F)	Below 1.5V	
				Other condition at idle	Approx. 12V	
2U		○	Injector (Nos. 1, 3)	Ignition switch ON	Approx. 12V	*Engine Signal Monitor: Green and red lamps flash
				Idle	Approx. 12V*	
				Engine speed above 2,000 rpm on deceleration (After warm-up)	Approx. 12V	
2V		○	Injector (Nos. 2, 4)	Ignition switch at idle	Approx. 12V	
				Idle	Approx. 12V*	
				Engine speed above 2,000 rpm on deceleration (After warm-up)	Approx. 12V	
2W		○	ISC valve	Ignition switch ON	Approx. 12V	
				Idle	Approx. 10V	
2X		○	Solenoid valve (Purge control)	Ignition switch ON	Approx. 12V	—
				Idle	Approx. 12V	

Downloaded from www.Manualslib.com manuals search engine

EXCEPT 4WD ■ENGINE CONTROL SYSTEM (4/4)

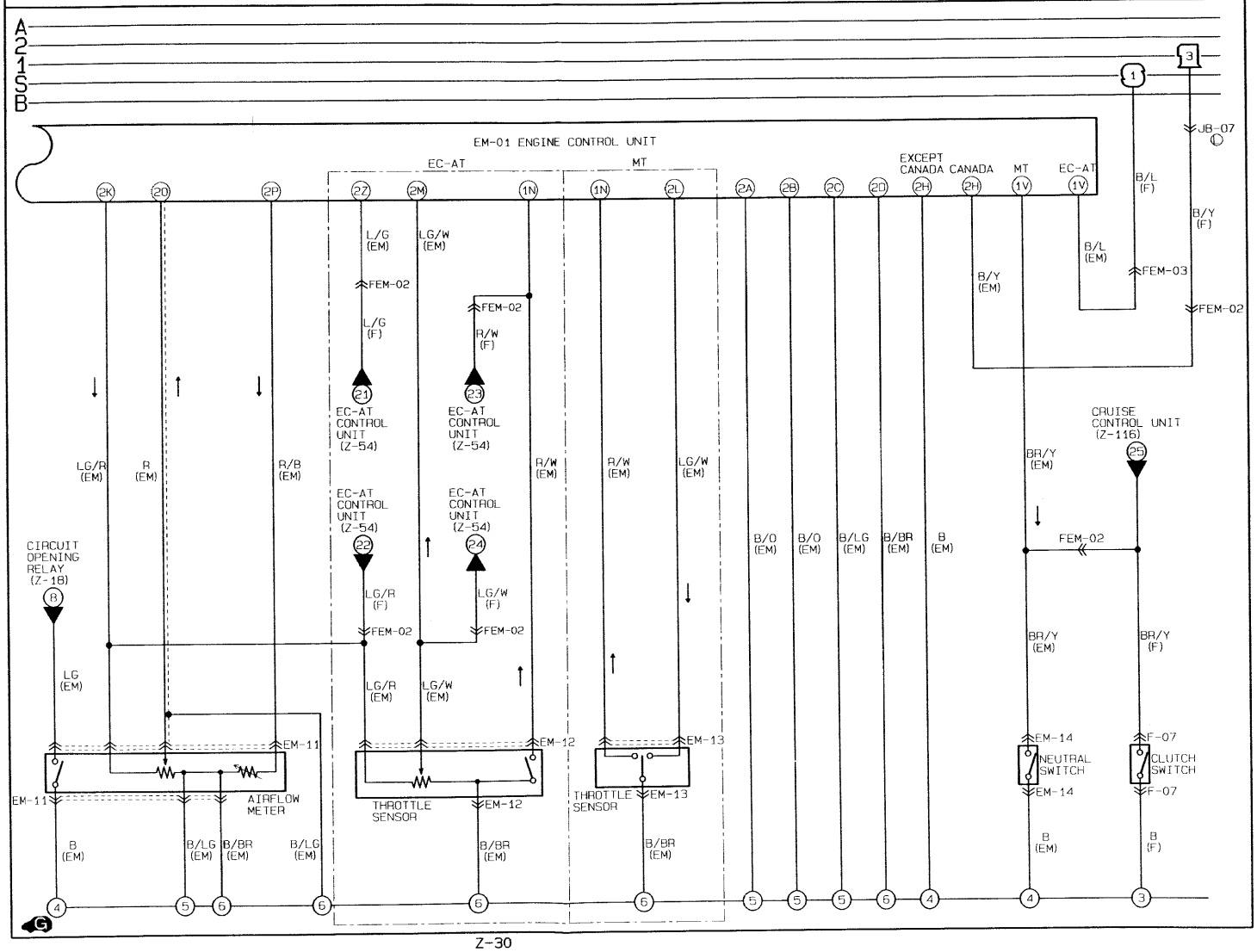

Downloaded from www.Manualslib.com manuals search engine

F-07 CLUTCH SWITCH (F)

EM-01 ENGINE CONTROL UNIT (EM)

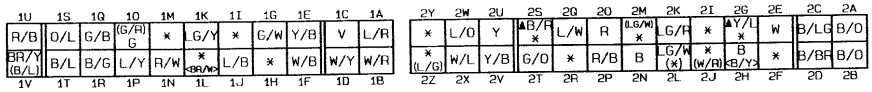

() . . .EC-AT ▲. . .DOHC <>. . .CANADA

EM-11 AIRFLOW METER (EM)

EM-12 THROTTLE SENSOR (EM)

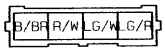

EM-13 THROTTLE SENSOR (EM)

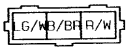

EM-14 NEUTRAL SWITCH (EM)

FEM-02 FRONT (F) -EMISSION (EM)

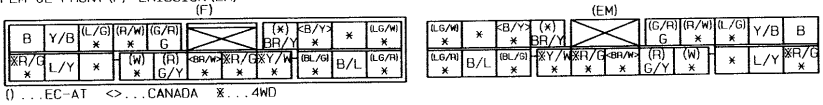

() . . .EC-AT <>. . .CANADA ※. . .4WD

FEM-03 FRONT (F) -EMISSION (EM)

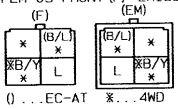

() . . .EC-AT ※. . .4WD

Downloaded from www.Manualslib.com manuals search engine

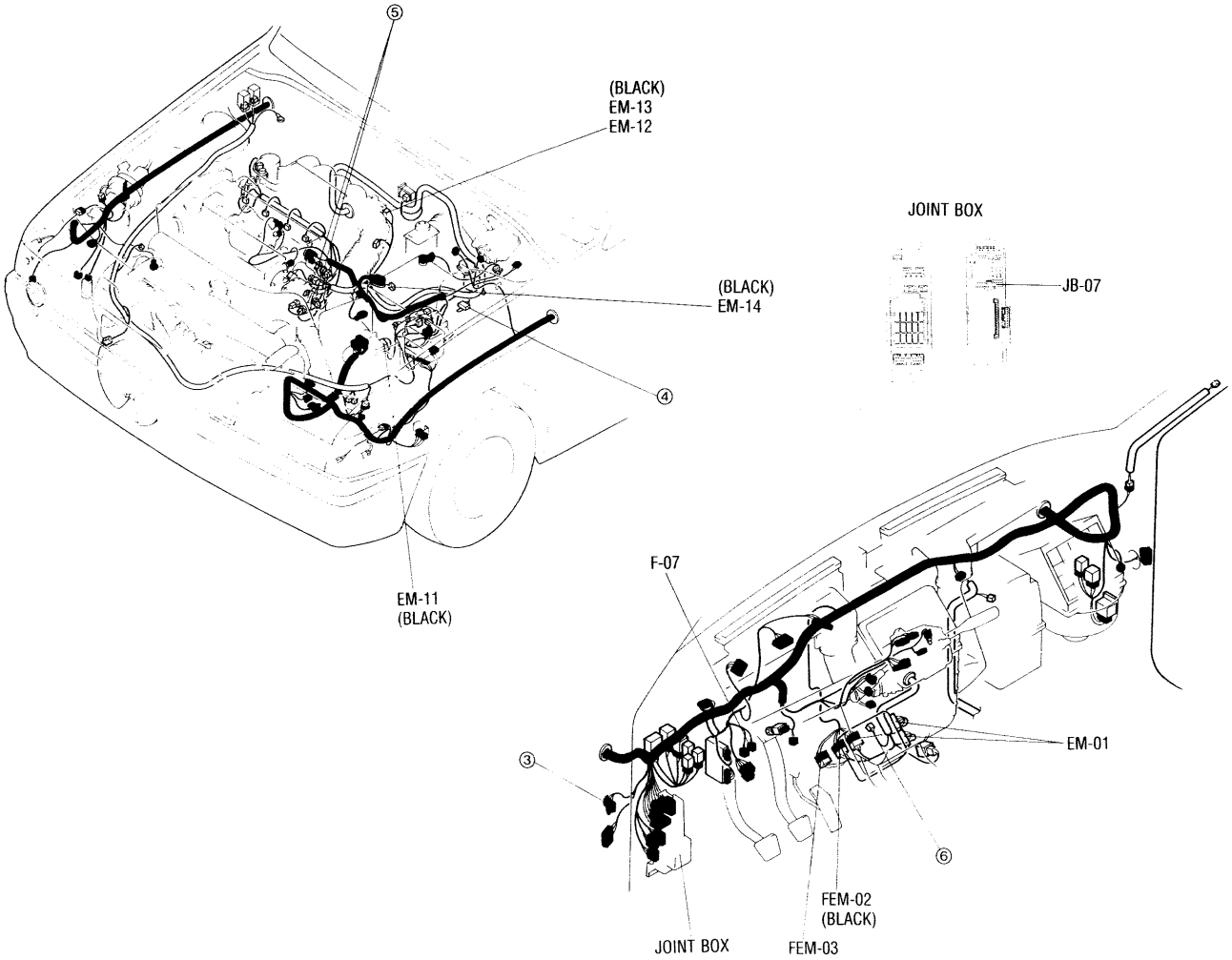

Downloaded from www.Manualslib.com manuals search engine

Engine control unit terminal (unit side)

2Y	2W	2U	2S	2Q	2O	2M	2K	2I	2G	2E	2C	2A	1U	1S	1Q	1O	1M	1K	1I	1G	1E	1C	1A
2Z	2X	2V	2T	2R	2P	2N	2L	2J	2H	2F	2D	2B	1V	1T	1R	1P	1N	1L	1J	1H	1F	1D	1B

Terminal	Input	Output	Connection to	Test condition	Correct voltage	Remark
1N	○		Throttle sensor (Idle switch) (MTX/ATX) EC-AT control unit (ATX)	Accelerator pedal released	Below 1.0V	Ignition switch ON
				Accelerator pedal depressed	Approx. 12V	
1V	○		Neutral/Clutch switches (MTX)	Neutral position or clutch pedal depressed	Below 1.0V	
				Others	Approx. 12V	
			Inhibitor switch (ATX)	N or P range	Below 1.0V	
				Others	Approx. 12V	
2A	—	—	Ground (Injector)	Constant	0V	—
2B	—	—	Ground (Output)	Constant	0V	—
2C	—	—	Ground (CPU)	Constant	0V	—
2D	—	—	Ground (Input)	Constant	0V	—
2H	○		Ground (California)	Constant	0V	—
			Open (Federal)	Constant	Approx. 2V	—
			Main relay (Canada)	Ignition switch ON	Approx. 12V	—
2K	○		Throttle sensor (ATX)/EC-AT control unit (ATX)/Airflow meter	Constant	4.5–5.5V	
2L	○		Throttle sensor (Power switch) (MTX)	Accelerator pedal released	Approx. 5V	—
				Accelerator pedal fully opened	Below 1.0V	
2M	○		Throttle sensor (ATX)/EC-AT control unit (ATX)	Accelerator pedal released	Approx. 0.5V	
				Accelerator pedal fully opened	Approx. 4.0V	
2O	○		Airflow meter	Ignition switch ON	Approx. 3.8V	—
				Idle	Approx. 3.3V	
2P	○		Intake air thermo-sensor	Ambient air temperature 20°C (68°F)	Approx. 2.5V	Built in airflow meter
2Z		○	EC-AT control unit (ATX)	Engine coolant temperature below 72°C (162°F) at idle	Below 2.5V	
				Engine coolant temperature above 72°C (162°F) at idle	Approx. 12V	

Downloaded from www.Manualslib.com manuals search engine

4WD ■ENGINE CONTROL SYSTEM (1/4)

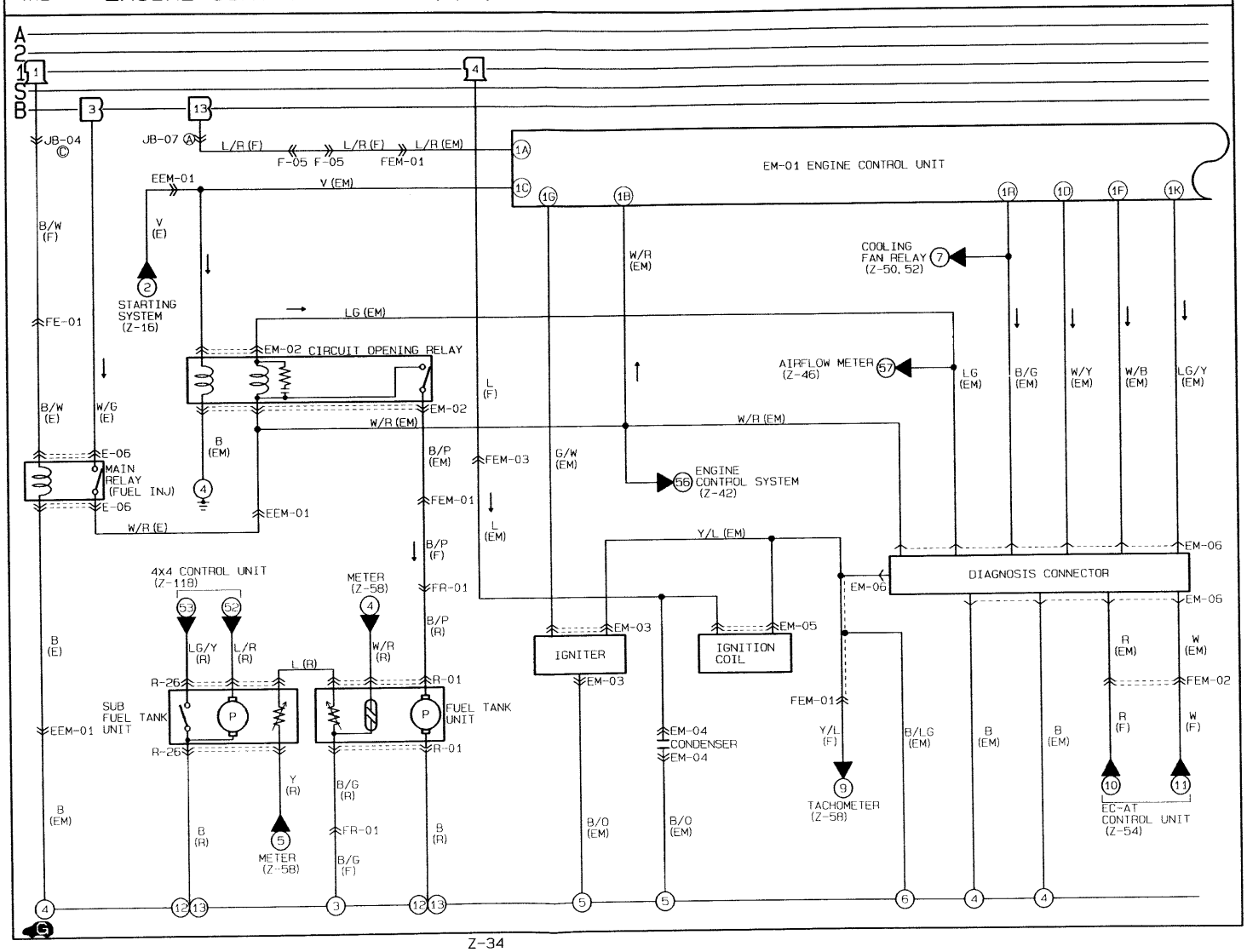

Downloaded from www.Manualslib.com manuals search engine

F-05 JOINT CONNECTOR (F)

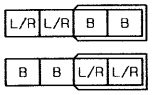

E-06 MAIN RELAY (E)
(FUEL INJ)

EM-01 ENGINE CONTROL UNIT (EM)

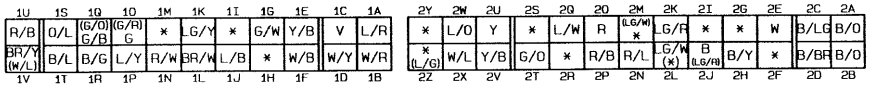

() . . .EC-AT

EM-02 CIRCUIT
OPENING RELAY (EM)

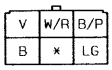

EM-03 IGNITER (EM)

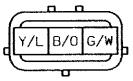

EM-04 CONDENSER (EM)

EM-05 IGNITION COIL (EM)

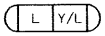

EM-06 DIAGNOSIS CONNECTOR (EM)

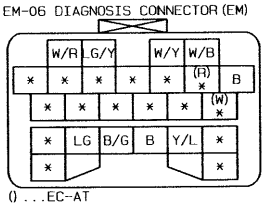

() . . .EC-AT

R-01 FUEL TANK UNIT (R)

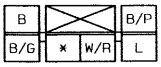

R-26 SUB FUEL TANK UNIT (R)

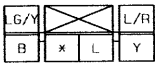

FEM-01 FRONT (F) -EMISSION (EM)

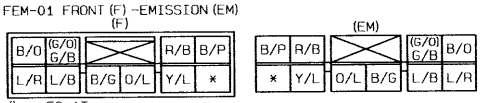

() . . .EC-AT

FEM-02 FRONT (F) -EMISSION (EM)

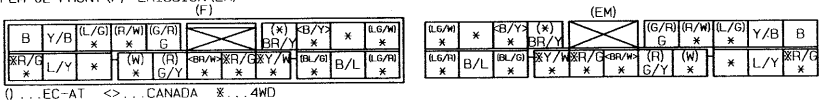

() . . .EC-AT <>. . .CANADA ※. . .4WD

FEM-03 FRONT (F) -EMISSION (EM)

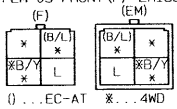

() . . .EC-AT ※. . .4WD

FE-01 FRONT (F) -ENGINE (E)

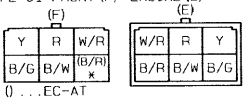

() . . .EC-AT

EEM-01 ENGINE (E) -EMISSION (EM)

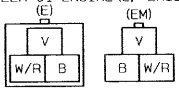

FR-01 FRONT (F) -REAR (R)

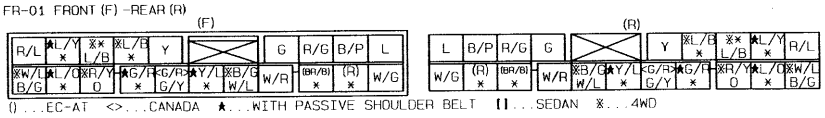

() . . .EC-AT <>. . .CANADA ★. . .WITH PASSIVE SHOULDER BELT [ ] . . .SEDAN ※. . .4WD

Downloaded from www.Manualslib.com manuals search engine

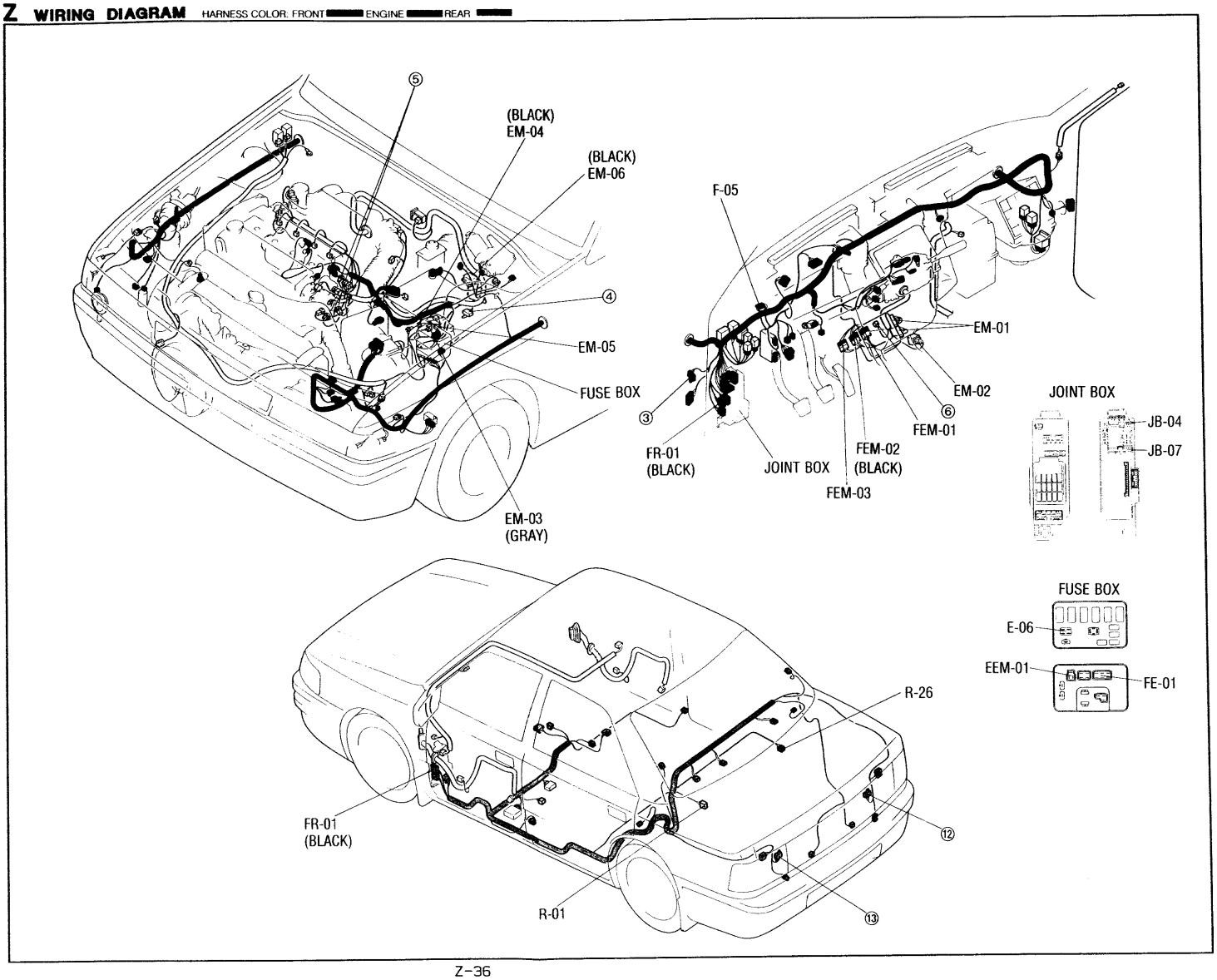

Downloaded from www.Manualslib.com manuals search engine

Engine control unit terminal (unit side)

2Y	2W	2U	2S	2Q	2O	2M	2K	2I	2G	2E	2C	2A	1U	1S	1Q	1O	1M	1K	1I	1G	1E	1C	1A
2Z	2X	2V	2T	2R	2P	2N	2L	2J	2H	2F	2D	2B	1V	1T	1R	1P	1N	1L	1J	1H	1F	1D	1B

Terminal	Input	Output	Connection to	Test condition		Correct voltage	Remark
1A	—	—	Battery	Constant		Approx. 12V	For backup
1B	○		Main relay (FUEL INJ relay)	Ignition switch	OFF	Approx. 0V	—
					ON	Approx. 12V	
1C	○		Ignition switch (START)	While cranking		Approx. 10V	—
				Ignition switch ON		Approx. 0V	
1D		○	Self-Diagnosis Checker (Monitor lamp)	Test switch at "SELF-TEST" Lamp illuminated for 3 sec. after ignition switch OFF→ON		Approx. 5V	With Self-Diagnosis Checker and System Selector
				Lamp not illuminated after 3 sec.		Approx. 12V	
				Test switch at "O_2 MONITOR" at idle Monitor lamp illuminated		Approx. 5V	
				Test switch at "O_2 MONITOR" at idle Monitor lamp illuminated		Approx. 12V	
1F		○	Self-Diagnosis Checker (Code Number)	Buzzer sounded for 3 sec. after ignition switch OFF→ON		Below 2.5V	●With Self-Diagnosis Checker and System Selector
				Buzzer not sounded after 3 sec.		Approx. 12V	
				Buzzer sounded		Below 2.5V	●With System Selector test Selector at "SELF-TEST"
				Buzzer not sounded		Approx. 12V	
1G		○	Igniter	Ignition switch ON		Approx. 0V	
				Idle		Approx. 0.2V	
1K	○		Diagnosis connector (TEN terminal)	System selector test switch at "O_2 MONITOR"		Approx. 12V	—
				System selector test switch at "SELF-TEST"		Below 1.0V	
1R	○		Fan switch	Fan operating (Engine coolant temperature over 91°C (196°F). CANADA: 97°C (207°F). USA or diagnosis connector terminal TFA grounded)		Below 1.0V	—
				Fan not operating (Idle)		Approx. 12V	

Downloaded from www.Manualslib.com manuals search engine

4WD ■ENGINE CONTROL SYSTEM (2/4)

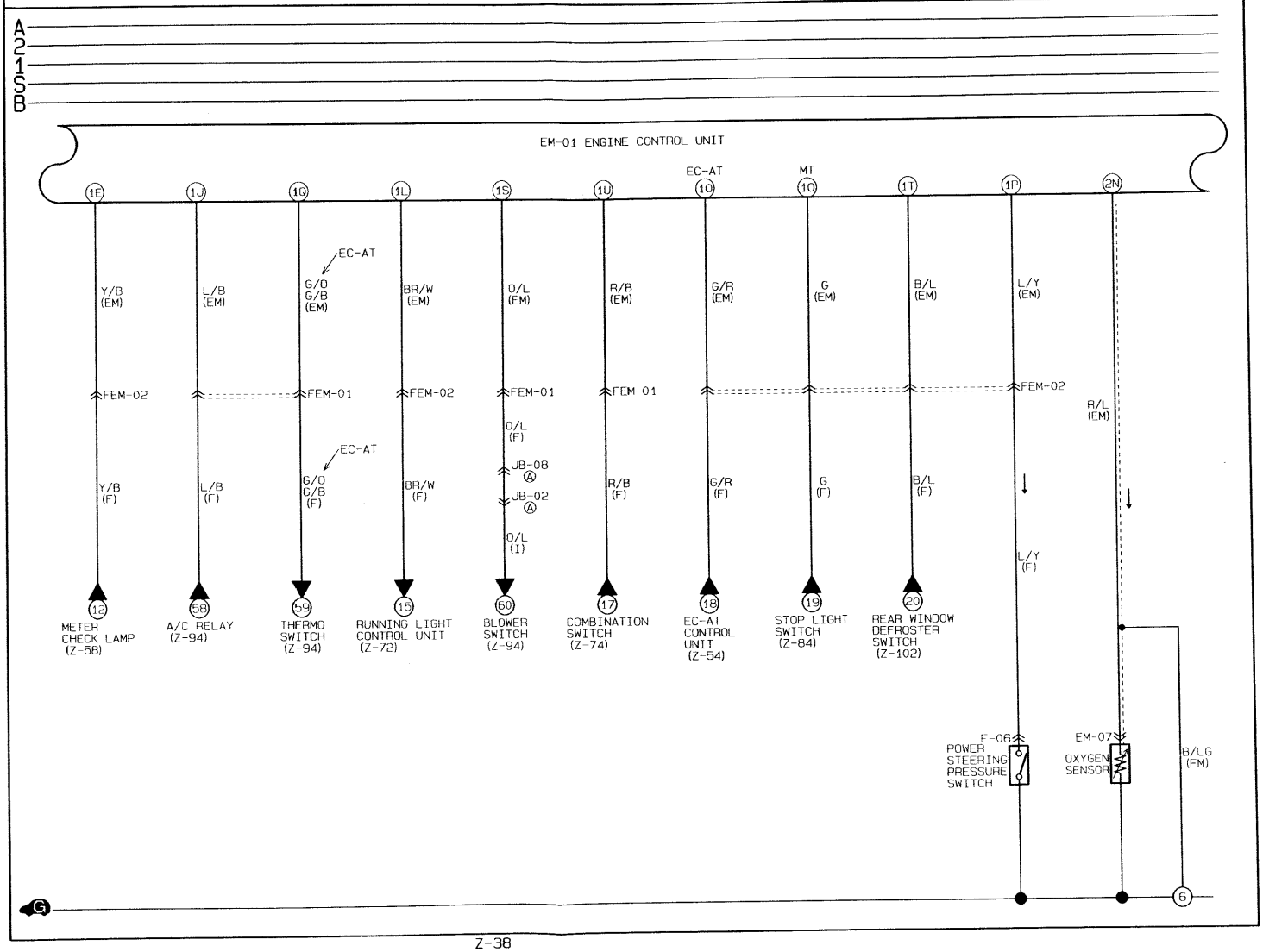

Downloaded from www.Manualslib.com manuals search engine

F-06 POWER STEERING PRESSURE SWITCH (F)

EM-01 ENGINE CONTROL UNIT (EM)

1U	1S	1Q	1O	1M	1K	1I	1G	1E	1C	1A
R/B	O/L	(G/O) G/B	(G/R) G	*	LG/Y	*	G/W	Y/B	V	L/R
BR/Y (W/L)	B/L	B/G	L/Y	R/W	BR/W	L/B	*	W/B	W/Y	W/R
1V	1T	1R	1P	1N	1L	1J	1H	1F	1D	1B

() . . .EC-AT

2Y	2W	2U	2S	2Q	2O	2M	2K	2I	2G	2E	2C	2A
*	L/O	Y	*	L/W	R	(LG/W) *	LG/R	*	*	W	B/LG	B/O
* (L/G)	W/L	Y/B	G/O	*	R/B	R/L	LG/W (*)	B (LG/R)	B/Y	*	B/BR	B/O
2Z	2X	2V	2T	2R	2P	2N	2L	2J	2H	2F	2D	2B

EM-07 OXYGEN SENSOR (EM)

FEM-01 FRONT (F) -EMISSION (EM)

(F)

B/O	(G/O) G/B			R/B	B/P
L/R	L/B	B/G	O/L	Y/L	*

() . . .EC-AT

(EM)

B/P	R/B			(G/O) G/B	B/O
*	Y/L	O/L	B/G	L/B	L/R

FEM-02 FRONT (F) -EMISSION (EM)

(F)

B	Y/B	(L/G) *	(R/W) *	(G/R) G		(*) BR/Y	<B/Y> *	*	(LG/W) *		
※R/G *	L/Y	*	(W) *	(R) G/Y	<BR/W> *	※R/G *	※Y/W *	(BL/G) *	B/L	(LG/R) *	

() . . .EC-AT <>. . .CANADA ※. . .4WD

(EM)

(LG/W) *	*	<B/Y> *	(*) BR/Y		(G/R) G	(R/W) *	(L/G) *	Y/B	B			
(LG/R) *	B/L	(BL/G) *	※Y/W *	※R/G *	<BR/W> *	(R) G/Y	(W) *	*	L/Y	※R/G *		

Downloaded from www.Manualslib.com manuals search engine

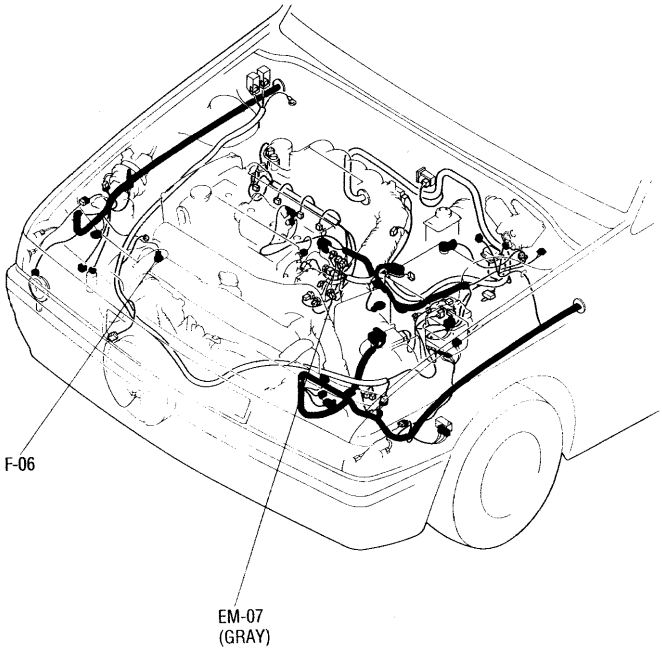

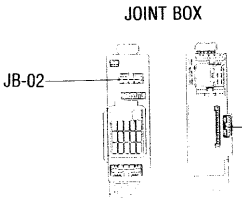

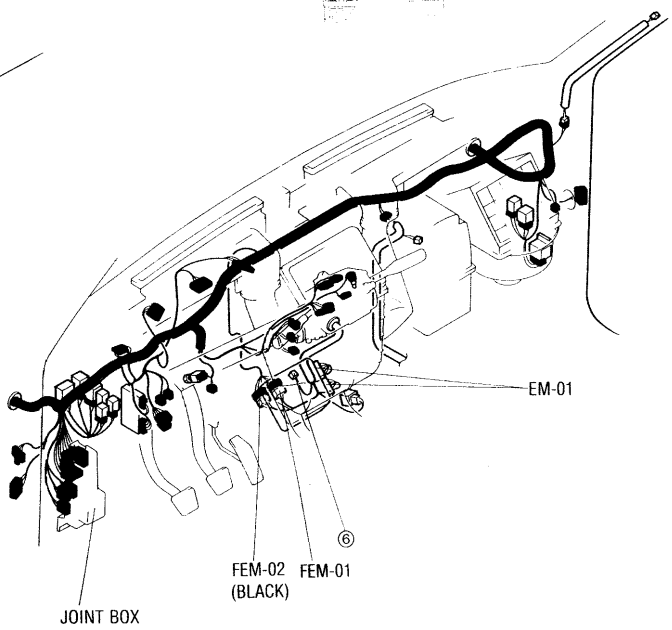

Downloaded from www.Manualslib.com manuals search engine

Engine control unit terminal (unit side)

2Y	2W	2U	2S	2Q	2O	2M	2K	2I	2G	2E	2C	2A	1U	1S	1Q	1O	1M	1K	1I	1G	1E	1C	1A
2Z	2X	2V	2T	2R	2P	2N	2L	2J	2H	2F	2D	2B	1V	1T	1R	1P	1N	1L	1J	1H	1F	1D	1B

Terminal	Input	Output	Connection to	Test condition	Correct voltage	Remark
1E		○	Malfunction indicator lamp (MIL)	Lamp illuminated for 3 sec. after ignition switch OFF→ON	Below 2.5V	With System Selector test switch at "SELF-TEST"
				Lamp not illuminated after 3 sec.	Approx. 12V	
				Lamp illuminated	Below 2.5V	
				Lamp not illuminated	Approx. 12V	
1J		○	A/C relay	Ignition switch ON	Approx. 12V	—
				A/C switch ON at idle	Below 2.5V	
				A/C switch OFF at idle	Approx. 12V	
1L	○		DRL relay (Canada)	Parking brake pulled with ignition switch ON (DRL OFF)	Approx. 12V	•DRL: Daytime Running Light
				Idle (DRL ON)	Below 2.5V	
1O	○		Stoplight switch/ EC-AT control unit (ATX)	Brake pedal released	Below 1.0V	—
				Brake pedal depressed	Approx. 12V	
1P	○		P/S pressure switch	Ignition switch ON	Approx. 12V	—
				P/S ON at idle	Below 1.0V	
				P/S OFF at idle	Approx. 12V	
1Q	○		A/C switch	A/C switch ON	Below 2.5V	Ignition switch ON and blower motor ON
				A/C switch OFF	Approx. 12V	
1S	○		Blower control switch	Blower control switch OFF or 1st position	Approx. 12V	Ignition switch ON
				Blower control switch 2nd or more position	Below 1.0V	
1T	○		Rear window defroster switch	Rear window defroster switch OFF	Below 1.0V	Ignition switch ON
				Rear window defroster switch ON	Approx. 12V	
1U	○		Headlight switch	Headlights ON	Approx. 12V	
				Headlights OFF	Below 1.0V	
2N	○		Oxygen sensor	Ignition switch ON	0V	
				Idle (Cold engine)	0V	
				Idle (After warm-up)	0–1.0V	
				Increase engine speed (After warm-up)	0.5–1.0V	
				Deceleration	0–0.4V	

Downloaded from www.Manualslib.com manuals search engine

4WD ■ENGINE CONTROL SYSTEM (3/4)

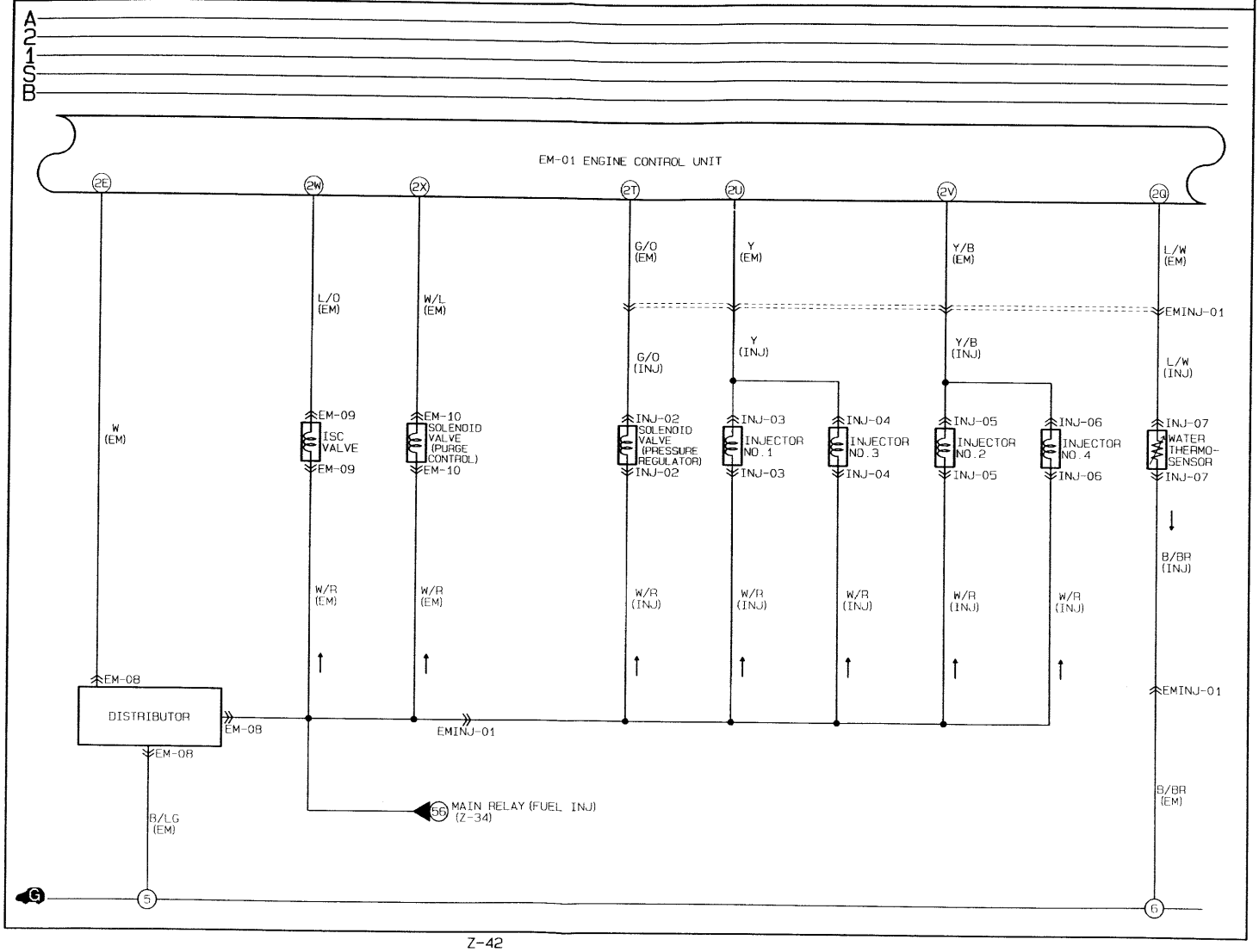

Downloaded from www.Manualslib.com manuals search engine

EM-01 ENGINE CONTROL UNIT (EM)

1U	1S	1Q	1O	1M	1K	1I	1G	1E	1C	1A
R/B	O/L	(G/O) G/B	(G/R) G	*	LG/Y	*	G/W	Y/B	V	L/R
BR/Y (W/L)	B/L	B/G	L/Y	R/W	BR/W	L/B	*	W/B	W/Y	W/R
1V	1T	1R	1P	1N	1L	1J	1H	1F	1D	1B

() . . . EC-AT

2Y	2W	2U	2S	2Q	2O	2M	2K	2I	2G	2E	2C	2A
*	L/O	Y	*	L/W	R	(LG/W) *	LG/R	*	*	W	B/LG	B/O
* (L/G)	W/L	Y/B	G/O	*	R/B	R/L	LG/W (*)	B (LG/R)	B/Y	*	B/BR	B/O
2Z	2X	2V	2T	2R	2P	2N	2L	2J	2H	2F	2D	2B

EM-08 DISTRIBUTOR (EM)

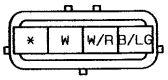

EM-09 ISC VALVE (EM)

EM-10 SOLENOID VALVE (PURGE CONTROL) (EM)

INJ-02 SOLENOID VALVE (PRESSURE REGULATOR) (INJ)

INJ-03 INJECTOR NO.1 (INJ)

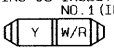

INJ-04 INJECTOR NO.3 (INJ)

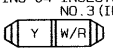

INJ-05 INJECTOR NO.2 (INJ)

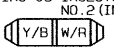

INJ-06 INJECTOR NO.4 (INJ)

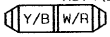

INJ-07 WATER THERMOSENSOR (INJ)

EMINJ-01 EMISSION (EM) -INJECTOR (INJ)

(EM)

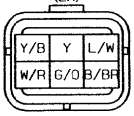

(INJ)

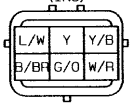

Downloaded from www.Manualslib.com manuals search engine

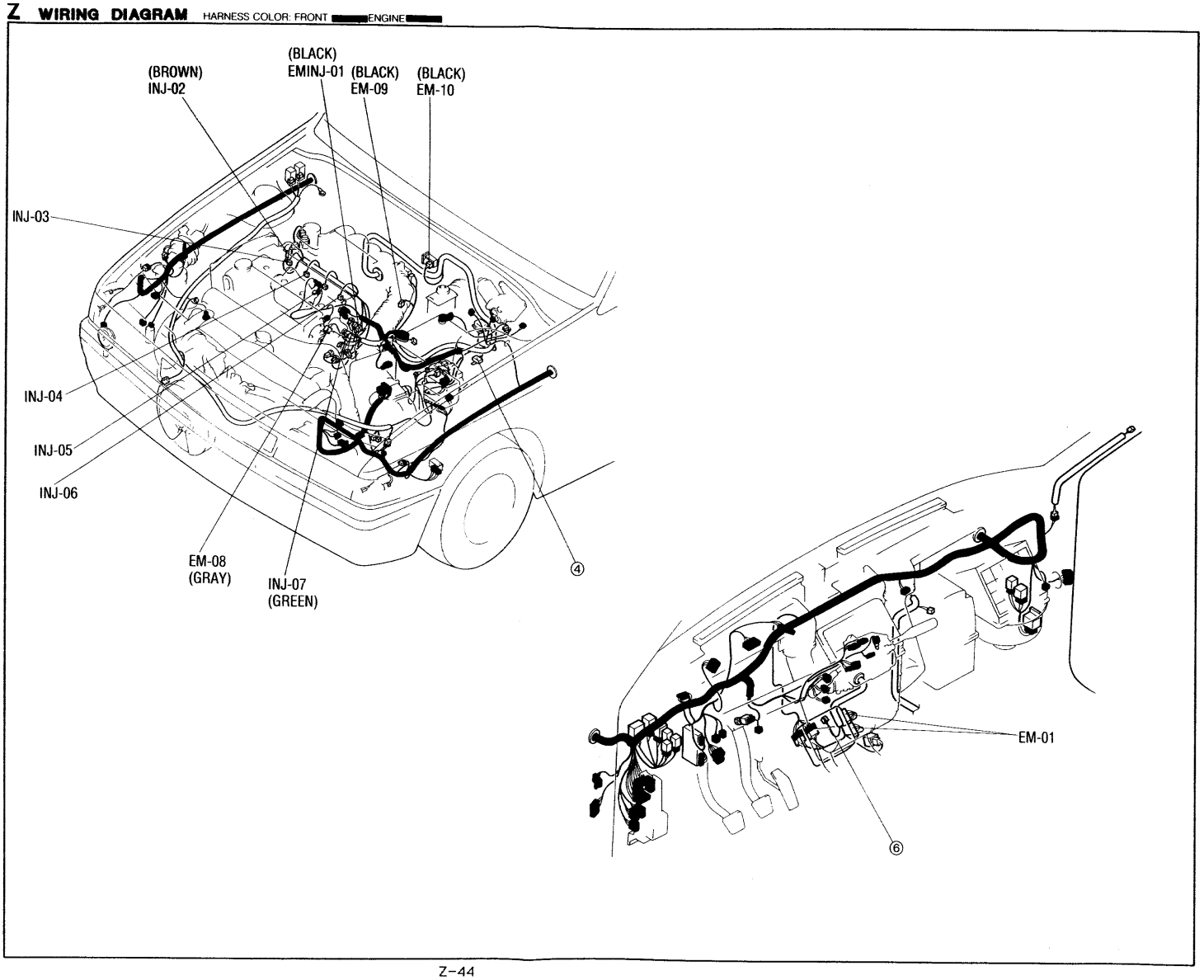

Downloaded from www.Manualslib.com manuals search engine

Engine control unit terminal (unit side)

2Y	2W	2U	2S	2Q	2O	2M	2K	2I	2G	2E	2C	2A	1U	1S	1Q	1O	1M	1K	1I	1G	1E	1C	1A
2Z	2X	2V	2T	2R	2P	2N	2L	2J	2H	2F	2D	2B	1V	1T	1R	1P	1N	1L	1J	1H	1F	1D	1B

Terminal	Input	Output	Connection to	Test condition	Correct voltage	Remark
2E	○		Distributor (Ne-signal)	Ignition switch ON	Approx. 0V or 5V	—
				Idle	Approx. 2V	
2Q	○		Water thermo-sensor	Engine coolant temperature 20°C (68°F)	Approx. 2.5V	
				After warm-up	Below 0.5V	
2T		○	Solenoid valve (Pressure regulator) (BP)	60 seconds after engine started when engine coolant temperature above 90°C (194°F) and intake air temperature above 58°C (136°F)	Below 1.5V	
				Other condition at idle	Approx. 12V	
2U		○	Injector (Nos. 1, 3)	Ignition switch ON	Approx. 12V	*Engine Signal Monitor: Green and red lamps flash
				Idle	Approx. 12V*	
				Engine speed above 2,000 rpm on deceleration (After warm-up)	Approx. 12V	
2V		○	Injector (Nos. 2, 4)	Ignition switch at idle	Approx. 12V	
				Idle	Approx. 12V*	
				Engine speed above 2,000 rpm on deceleration (After warm-up)	Approx. 12V	
2W		○	ISC valve	Ignition switch ON	Approx. 12V	—
				Idle	Approx. 10V	
2X		○	Solenoid valve (Purge control)	Ignition switch ON	Approx. 12V	—
				Idle	Approx. 12V	

Downloaded from www.Manualslib.com manuals search engine

WIRING DIAGRAM

4WD ■ENGINE CONTROL SYSTEM (4/4)

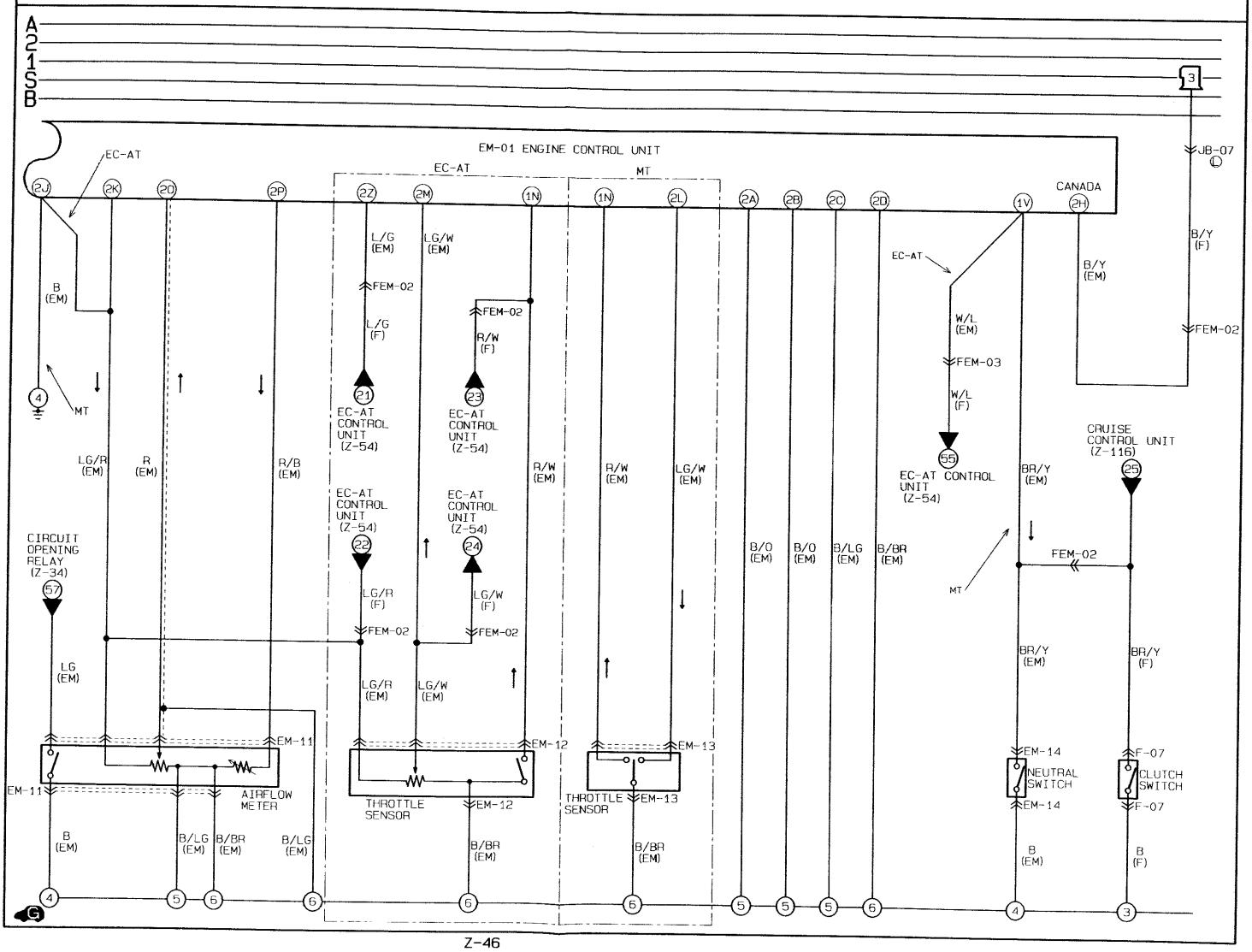

Downloaded from www.Manualslib.com manuals search engine

F-07 CLUTCH SWITCH (F)

EM-01 ENGINE CONTROL UNIT (EM)

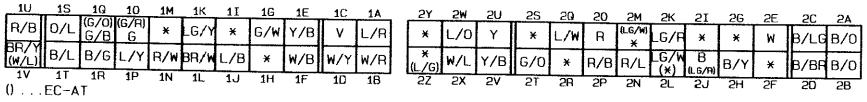

EM-11 AIRFLOW METER (EM)

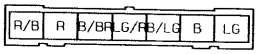

EM-12 THROTTLE SENSOR (EM)

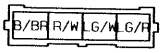

EM-13 THROTTLE SENSOR (EM)

EM-14 NEUTRAL SWITCH (EM)

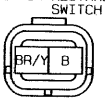

FEM-02 FRONT (F) -EMISSION (EM)

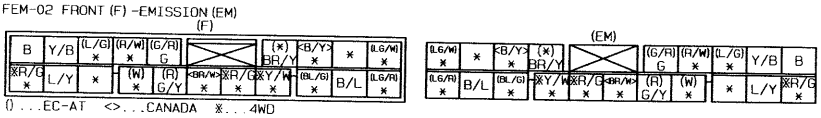

FEM-03 FRONT (F) -EMISSION (EM)

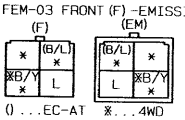

Downloaded from www.Manualslib.com manuals search engine

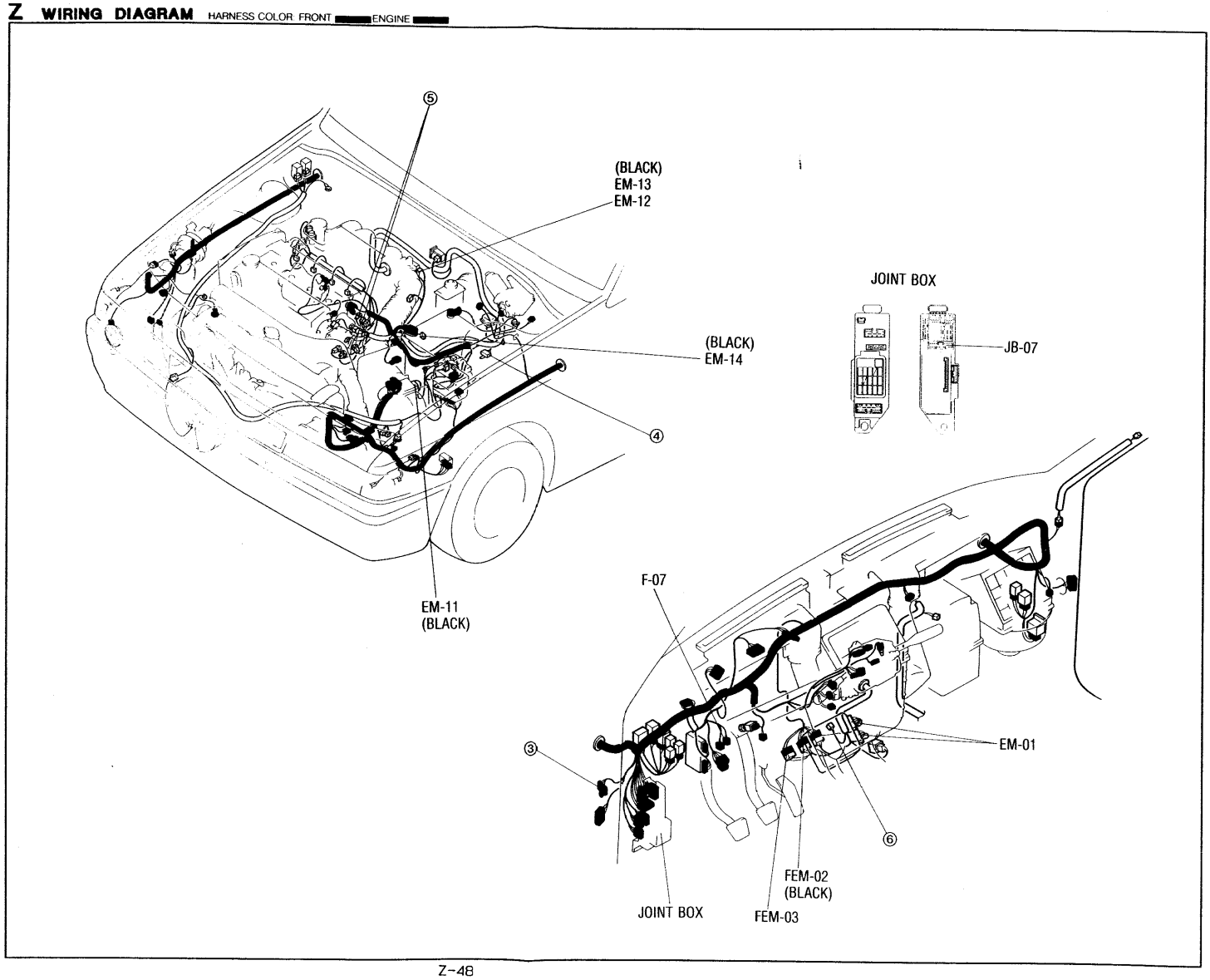

Downloaded from www.Manualslib.com manuals search engine

Engine control unit terminal (unit side)

2Y	2W	2U	2S	2Q	2O	2M	2K	2I	2G	2E	2C	2A	1U	1S	1Q	1O	1M	1K	1I	1G	1E	1C	1A
2Z	2X	2V	2T	2R	2P	2N	2L	2J	2H	2F	2D	2B	1V	1T	1R	1P	1N	1L	1J	1H	1F	1D	1B

Terminal	Input	Output	Connection to	Test condition	Correct voltage	Remark
1N	○		Throttle sensor (Idle switch) (MTX/ATX) EC-AT control unit (ATX)	Accelerator pedal released	Below 1.0V	Ignition switch ON
				Accelerator pedal depressed	Approx. 12V	
1V	○		Neutral/Clutch switches (MTX)	Neutral position or clutch pedal depressed	Below 1.0V	
				Others	Approx. 12V	
			Inhibitor switch (ATX)	N or P range	Below 1.0V	
				Others	Approx. 12V	
2A	—	—	Ground (Injector)	Constant	0V	—
2B	—	—	Ground (Output)	Constant	0V	—
2C	—	—	Ground (CPU)	Constant	0V	—
2D		—	Ground (Input)	Constant	0V	—
2H	○		Ground (California)	Constant	0V	—
			Open (Federal)	Constant	Approx. 2V	—
			Main relay (Canada)	Ignition switch ON	Approx. 12V	—
2J	—	—	Ground (MTX)	Constant	0V	—
	○		Throttle sensor (ATX)/EC-AT control unit (ATX)/Airflow meter	Constant	4.5–5.5V	
2K	○		Throttle sensor (ATX)/EC-AT control unit (ATX)/Airflow meter	Constant	4.5–5.5V	
2L	○		Throttle sensor (Power switch) (MTX)	Accelerator pedal released	Approx. 5V	—
				Accelerator pedal fully opened	Below 1.0V	
2M	○		Throttle sensor (ATX)/EC-AT control unit (ATX)	Accelerator pedal released	Approx. 0.5V	—
				Accelerator pedal fully opened	Approx. 4.0V	
2O	○		Airflow meter	Ignition switch ON	Approx. 3.8V	—
				Idle	Approx. 3.3V	
2P	○		Intake air thermo-sensor	Ambient air temperature 20°C (68°F)	Approx. 2.5V	Built in airflow meter
2Z		○	EC-AT control unit (ATX)	Engine coolant temperature below 72°C (162°F) at idle	Below 2.5V	
				Engine coolant temperature above 72°C (162°F) at idle	Approx. 12V	

Downloaded from www.Manualslib.com manuals search engine

MT ■COOLING FAN SYSTEM

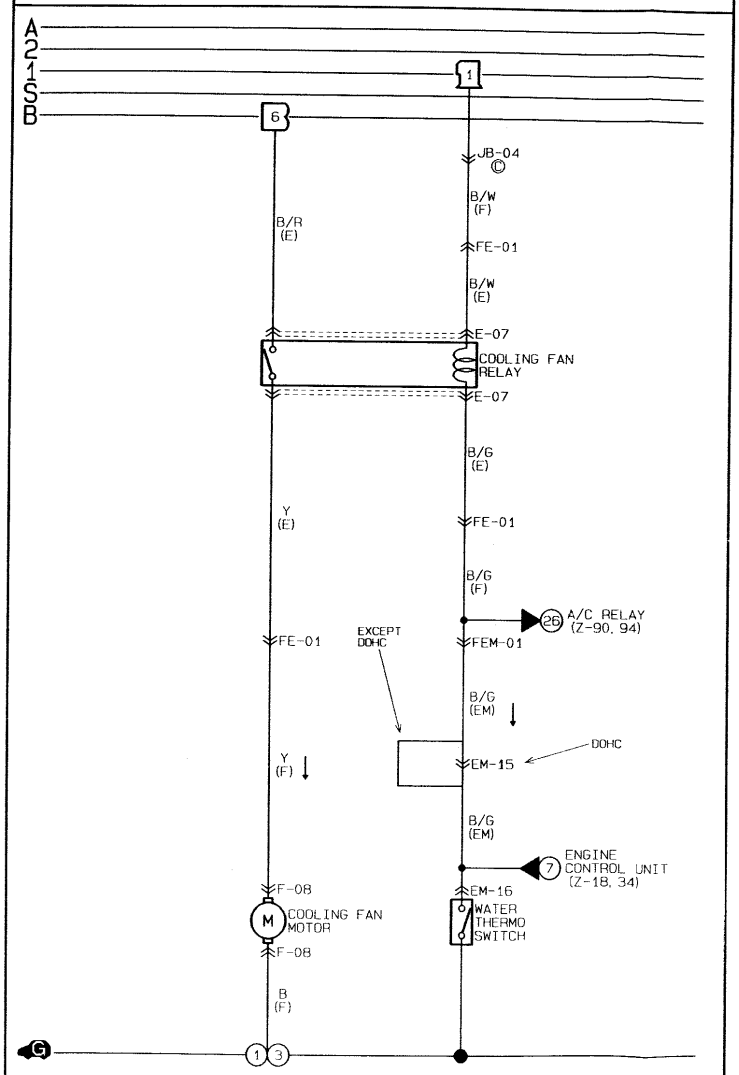

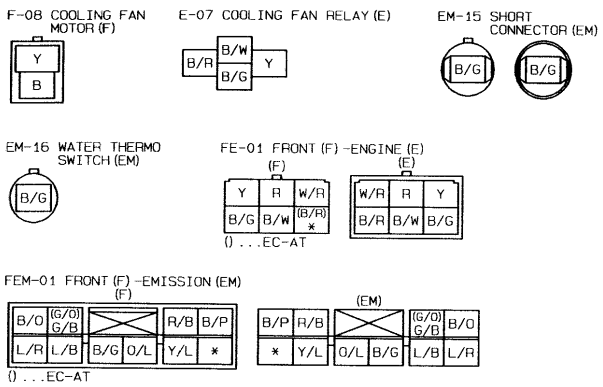

Downloaded from www.Manualslib.com manuals search engine

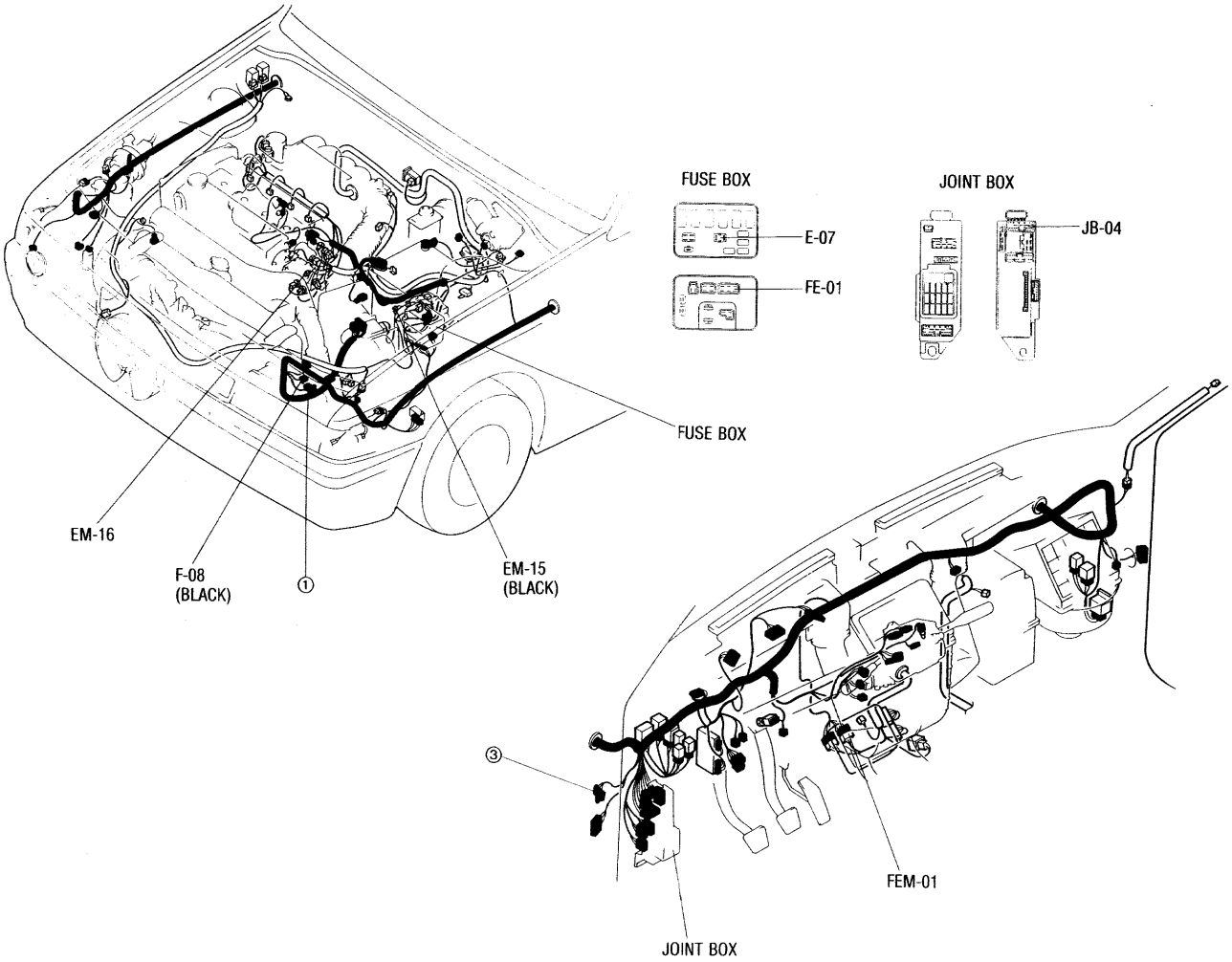

Downloaded from www.Manualslib.com manuals search engine

EC-AT■COOLING FAN SYSYTEM

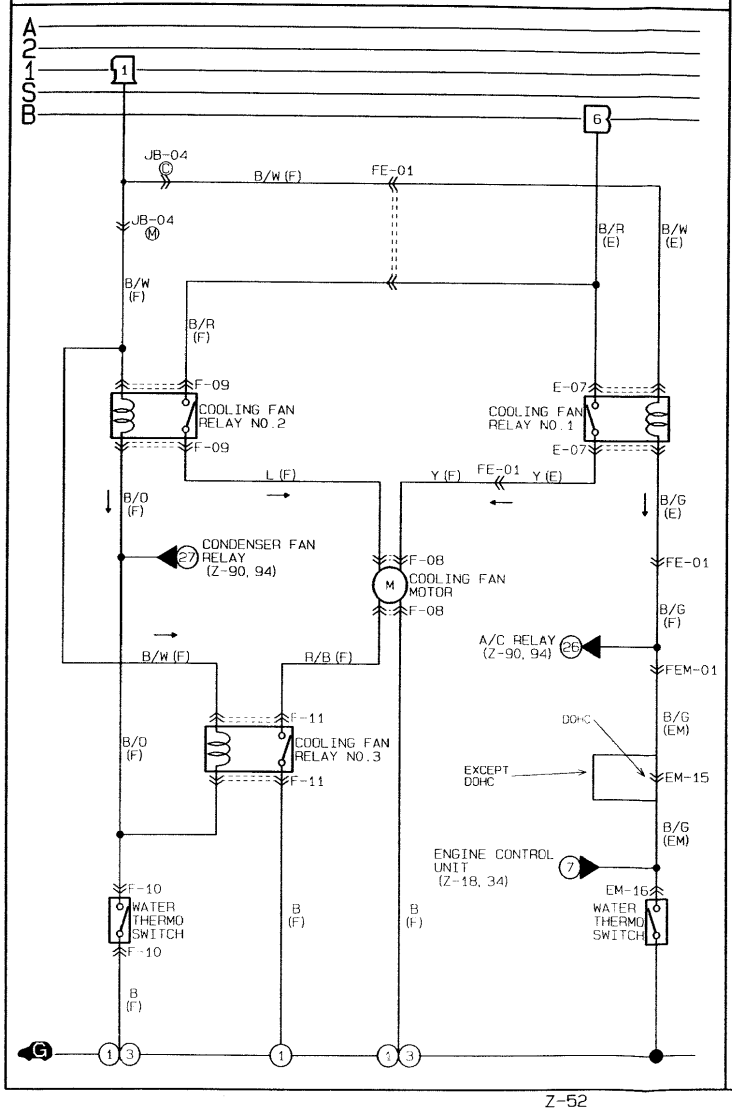

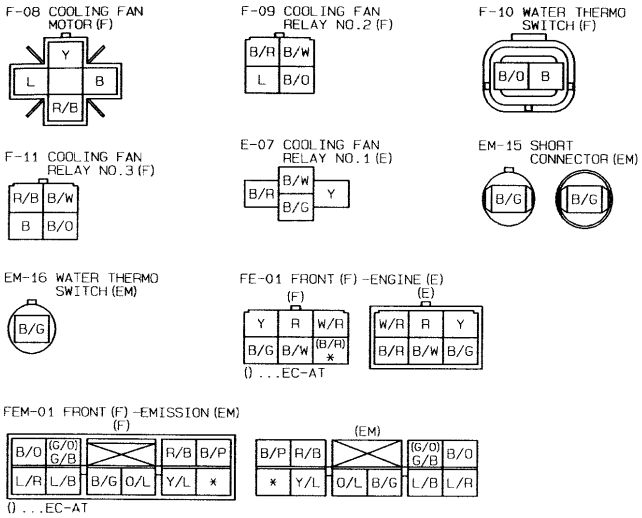

Downloaded from www.Manualslib.com manuals search engine

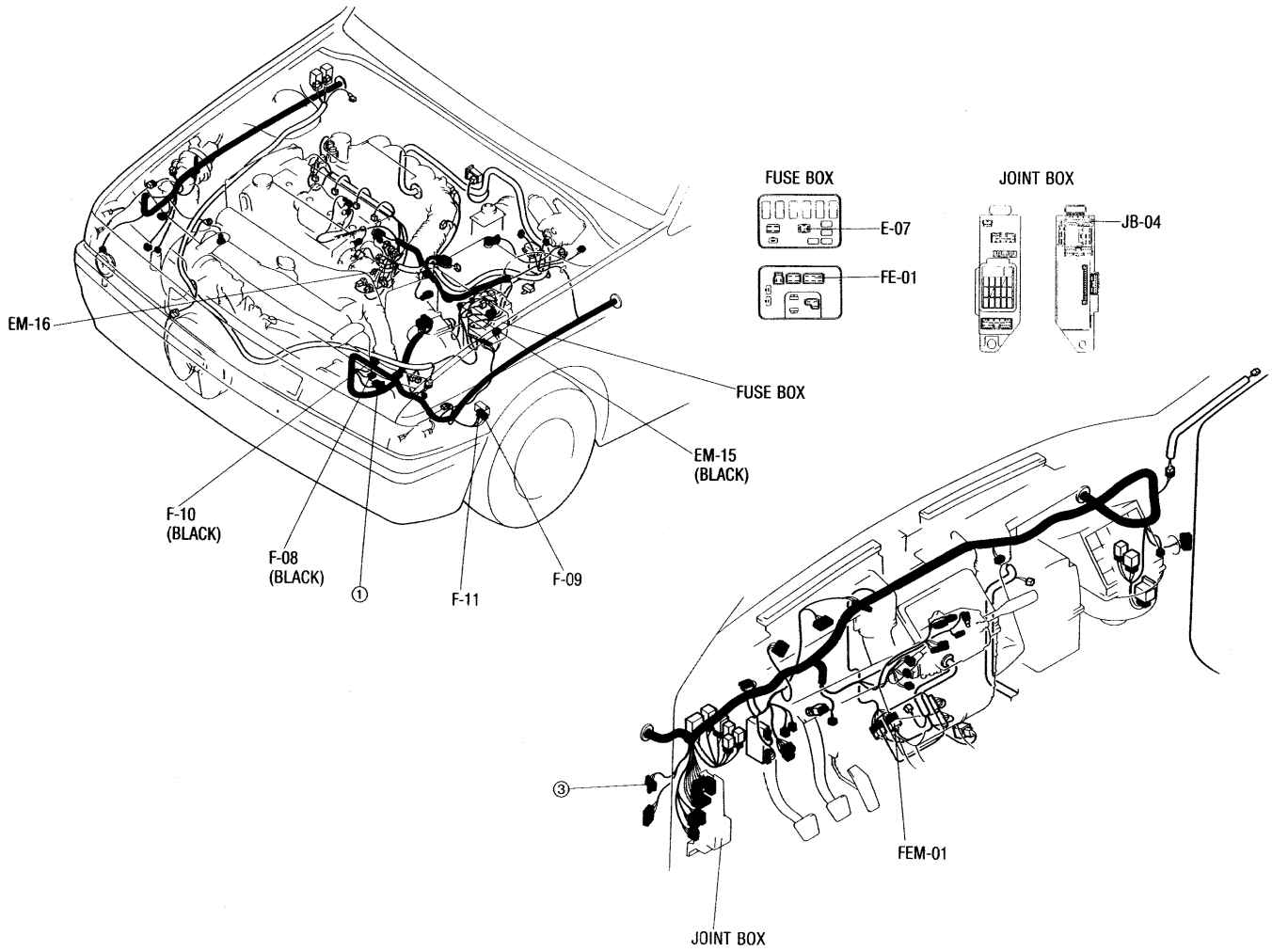

Downloaded from www.Manualslib.com manuals search engine

■ EC-AT CONTROL SYSTEM

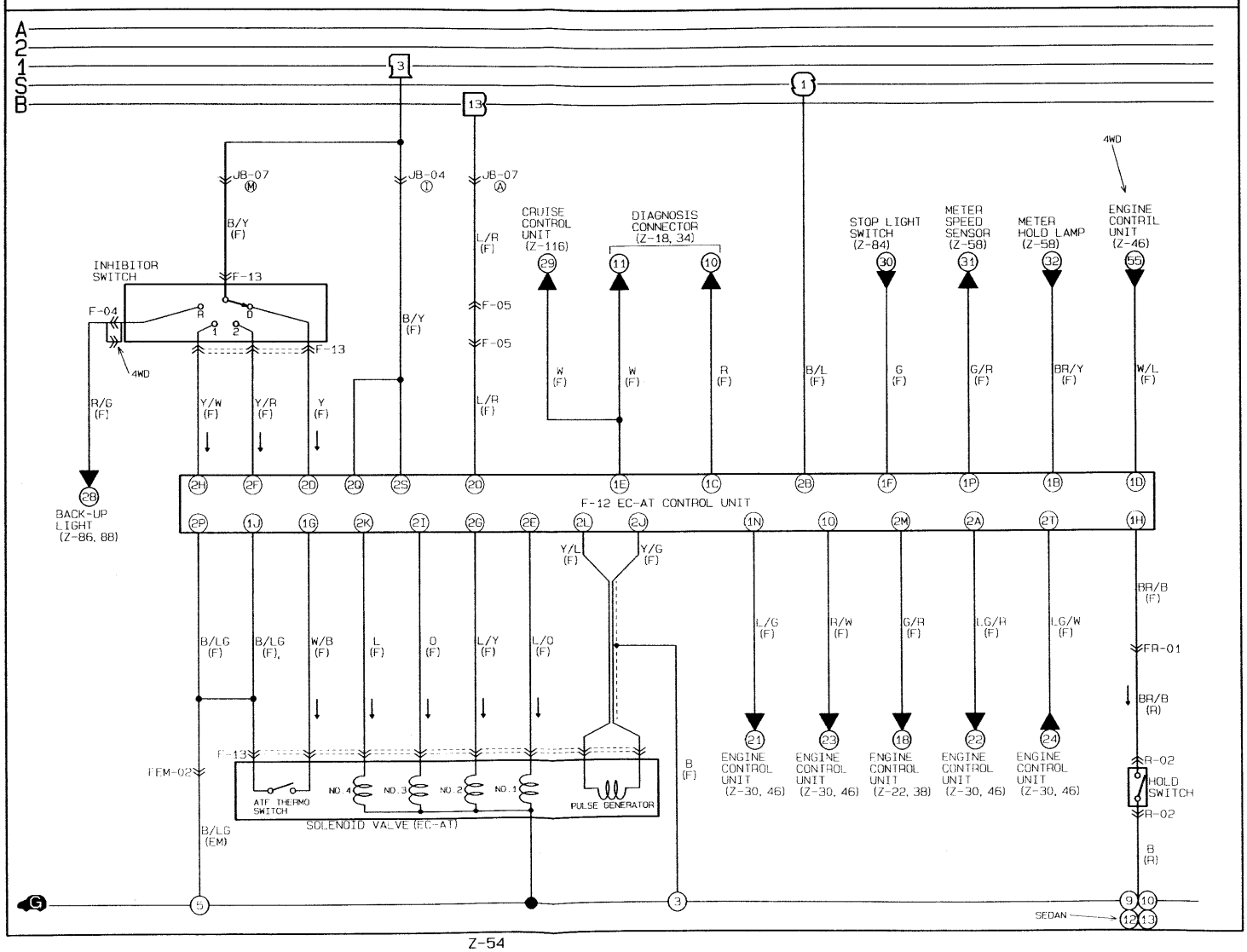

Downloaded from www.Manualslib.com manuals search engine

F-04 INHIBITOR SWITCH (F)

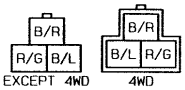

F-05 JOINT CONNECTOR (F)

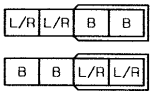

F-12 EC-AT CONTROL UNIT (F)

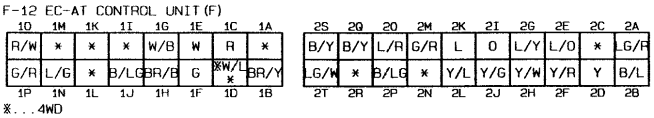

※...4WD

F-13 SOLENOID VALVE (EC-AT) & INHIBITOR SWITCH (F)

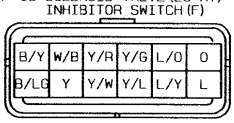

R-02 HOLD SWITCH (R)

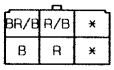

FEM-02 FRONT (F) -EMISSION (EM)

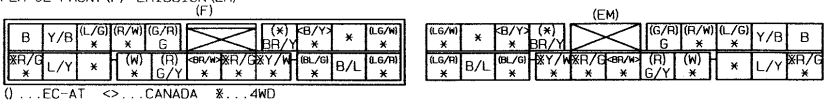

() ...EC-AT <>...CANADA ※...4WD

FR-01 FRONT (F) -REAR (R)

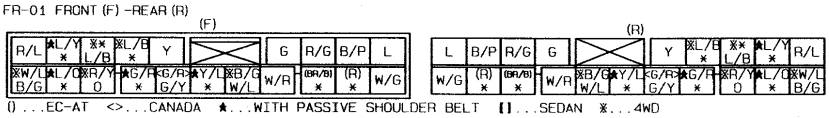

() ...EC-AT <>...CANADA ★...WITH PASSIVE SHOULDER BELT [ ]...SEDAN ※...4WD

Downloaded from www.Manualslib.com manuals search engine

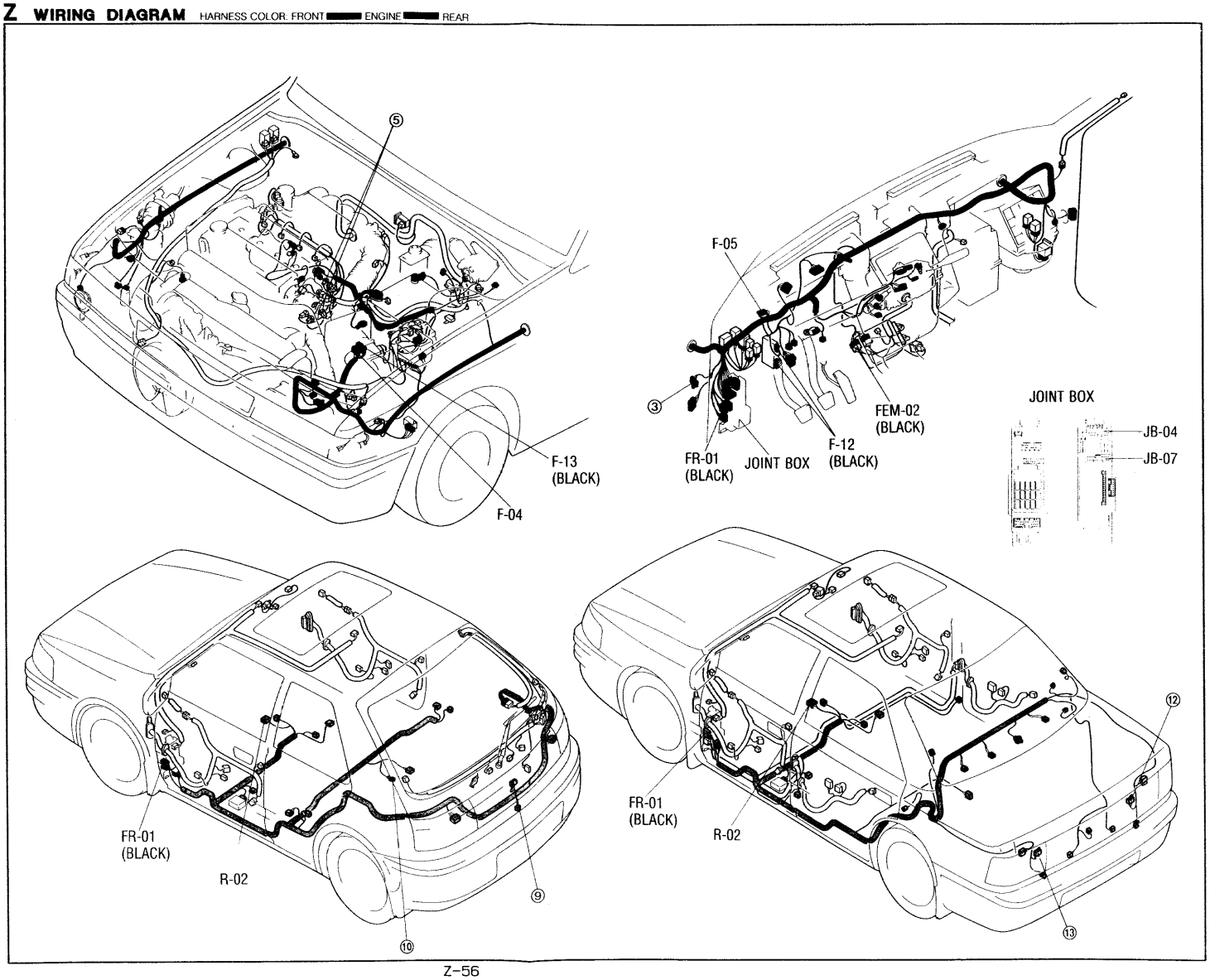

Downloaded from www.Manualslib.com manuals search engine

Downloaded from www.Manualslib.com manuals search engine

■ METER & WARNING LAMPS

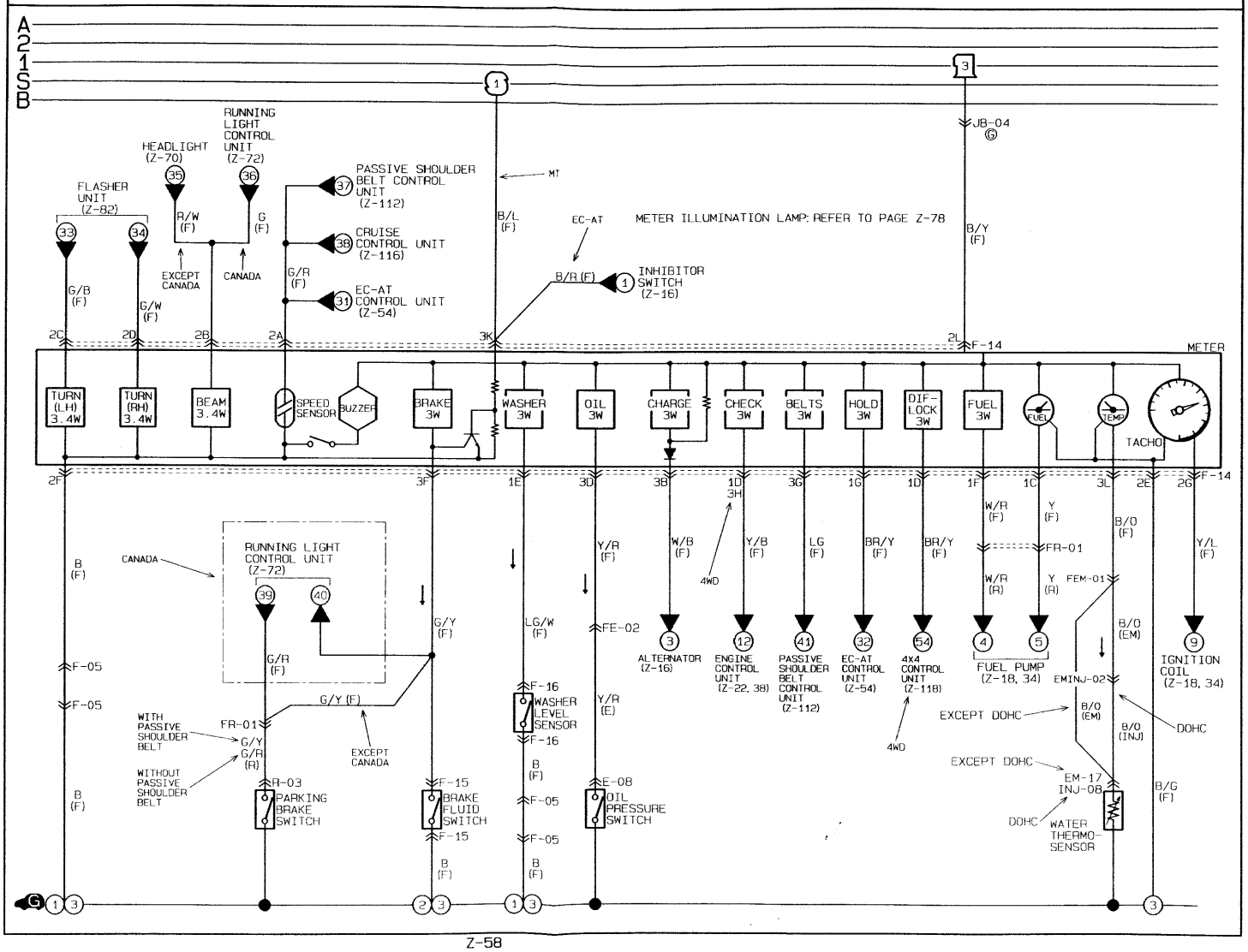

Downloaded from www.Manualslib.com manuals search engine

F-14 METER (F)

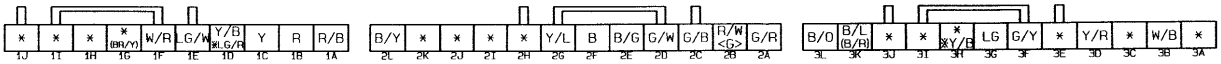

() . . .EC-AT <>. . .CANADA ※. . .4WD

F-05 JOINT CONNECTOR (F)

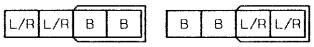

F-15 BRAKE FLUID SWITCH (F)

F-16 WASHER LEVEL SENSOR (F)

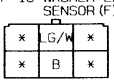

R-03 PARKING BRAKE SWITCH (R)

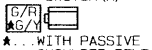

E-08 OIL PRESSURE SWITCH (E)

EM-17 WATER THERMO-SENSOR (EM)

FEM-01 FRONT (F) -EMISSION (EM)

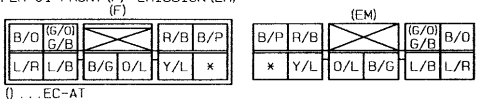

() . . .EC-AT

FE-02 FRONT (F) -ENGINE (E)

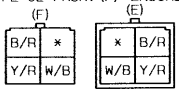

FR-01 FRONT (F) -REAR (R)

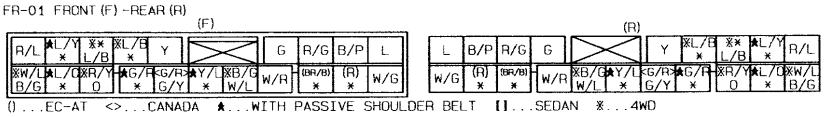

() . . .EC-AT <>. . .CANADA ★. . .WITH PASSIVE SHOULDER BELT [ ] . . .SEDAN ※. . .4WD

Downloaded from www.Manualslib.com manuals search engine

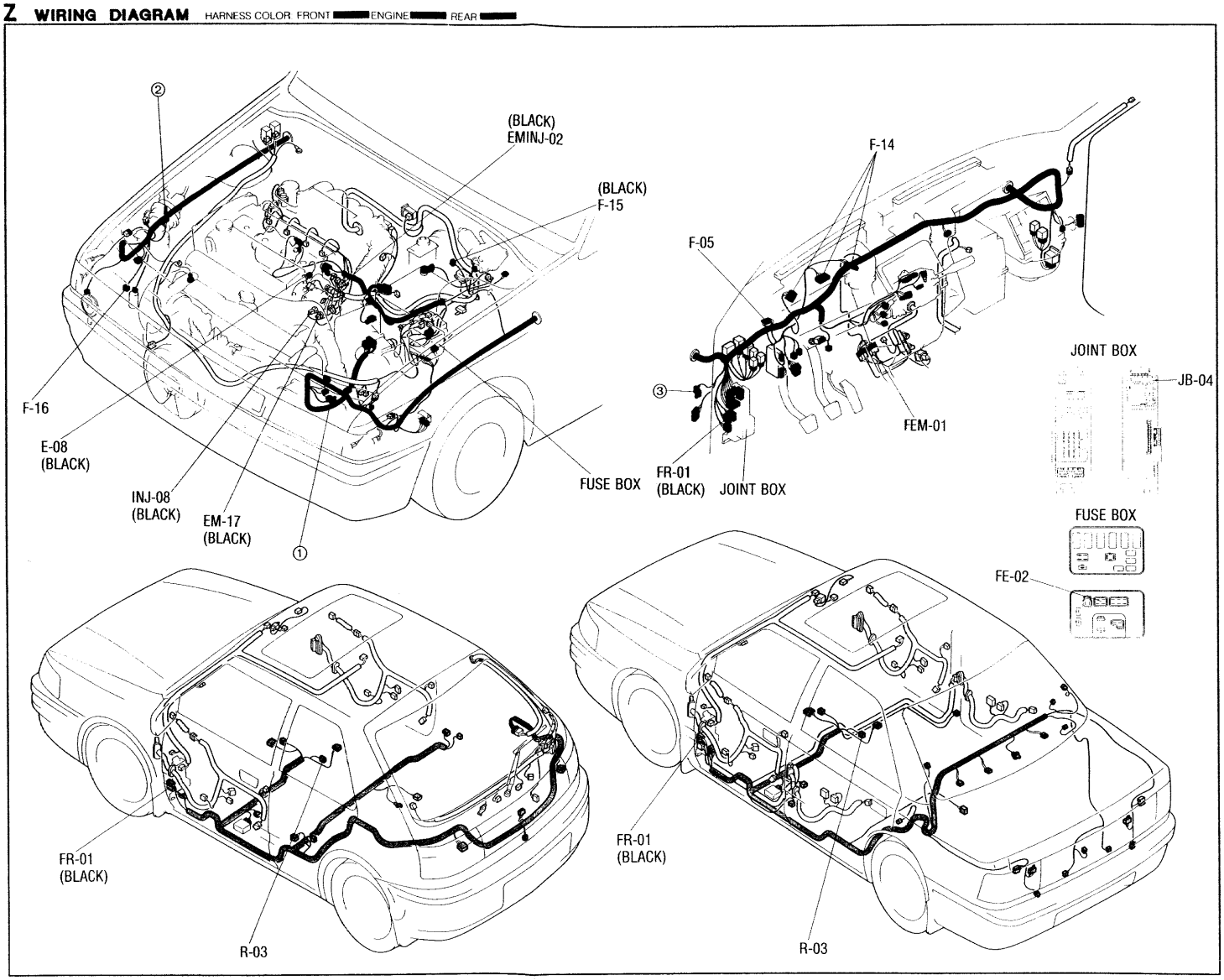

Downloaded from www.Manualslib.com manuals search engine

Downloaded from www.Manualslib.com manuals search engine

CANADA WITHOUT CRUISE CONTROL ■ FRONT WIPER & WASHER

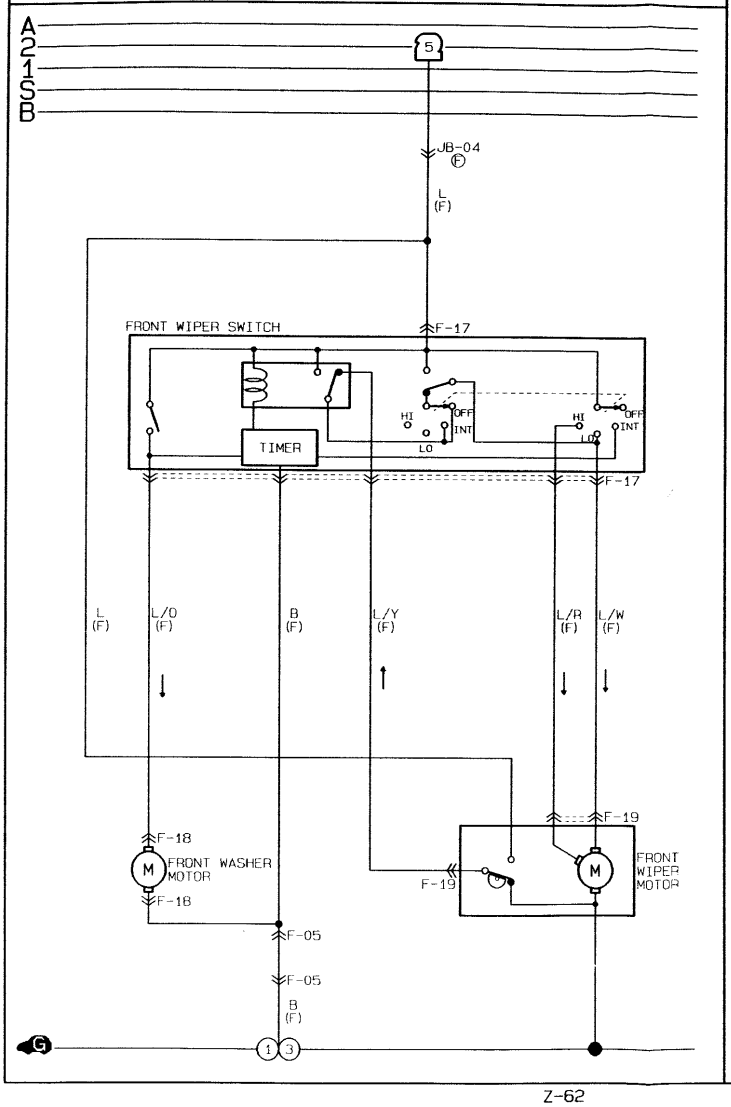

F-05 JOINT CONNECTOR (F)

L/R	L/R	B	B	B	B	L/R	L/R

F-17 FRONT WIPER SWITCH (F)

L/Y		L/O	L
L/W	B	L/R	*

F-18 FRONT WASHER MOTOR (F)

B
L/O

F-19 FRONT WIPER MOTOR (F)

L/W	L/R
L	L/Y

Downloaded from www.Manualslib.com manuals search engine

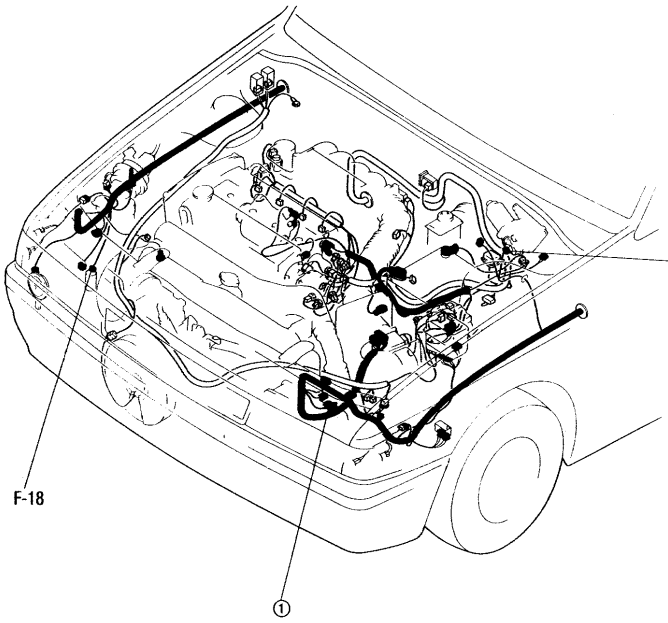

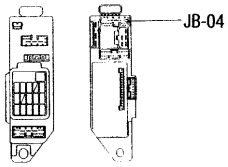

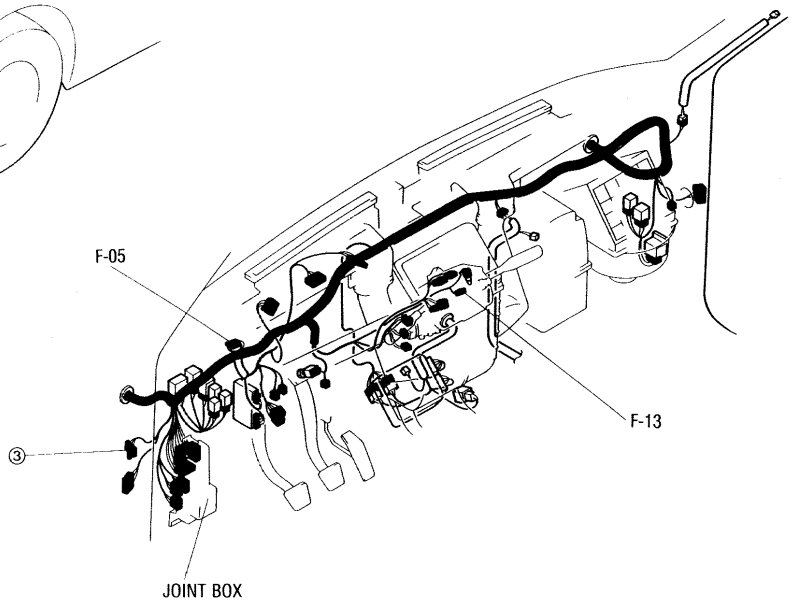

Downloaded from www.Manualslib.com manuals search engine

EXCEPT CANADA WITHOUT CRUISE CONTROL

■ FRONT WIPER & WASHER

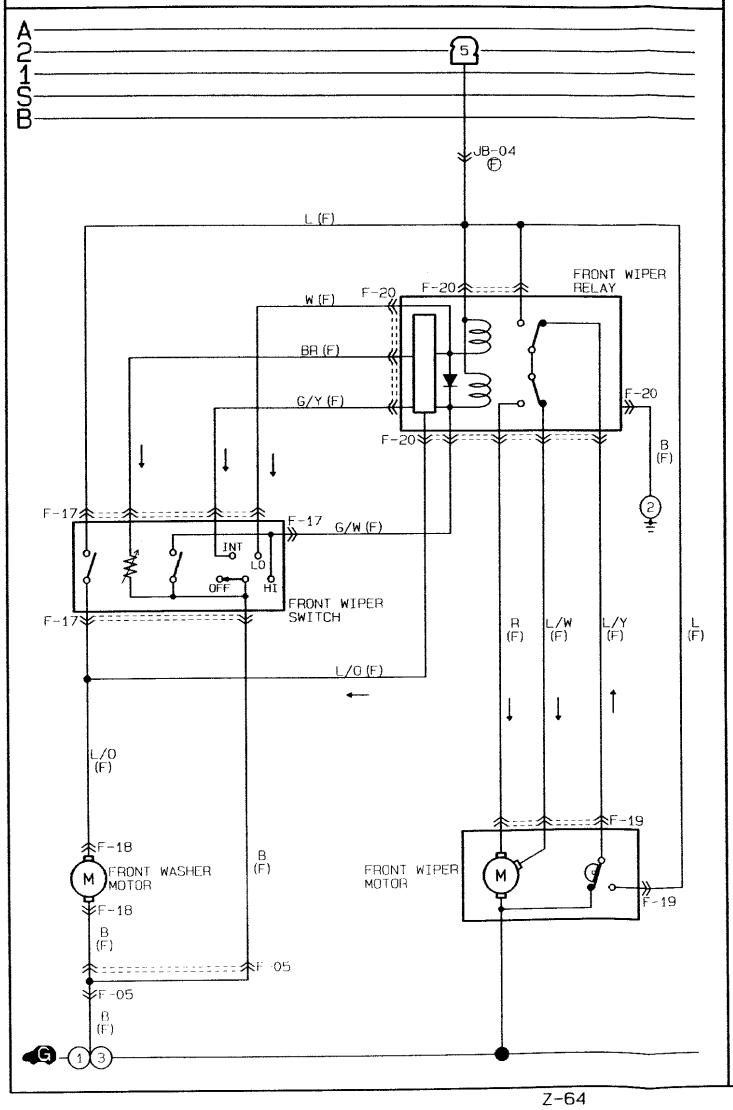

F-05 JOINT CONNECTOR (F)

L/R	L/R	B	B

B	B	L/R	L/R

F-17 FRONT WIPER SWITCH (F)

L/B	L			BR	G/Y	L/O
O	G/W	L/R	V	*	B	W

F-18 FRONT WASHER MOTOR (F)

B
L/O

F-19 FRONT WIPER MOTOR (F)

L/W	R
L	L/Y

F-20 FRONT WIPER RELAY (F)

B	L/Y		G/Y	L/W	R
BR	L/O	L	W	G/W	L

Downloaded from www.Manualslib.com manuals search engine

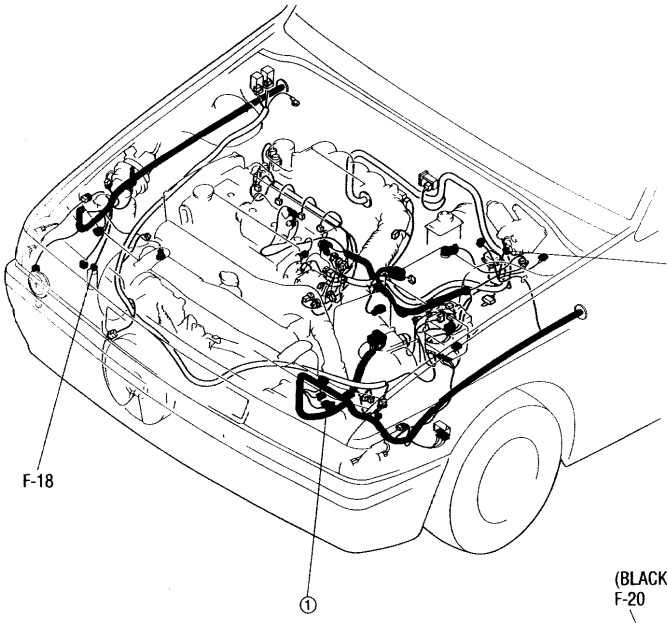

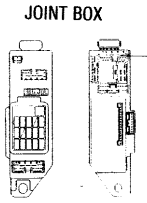

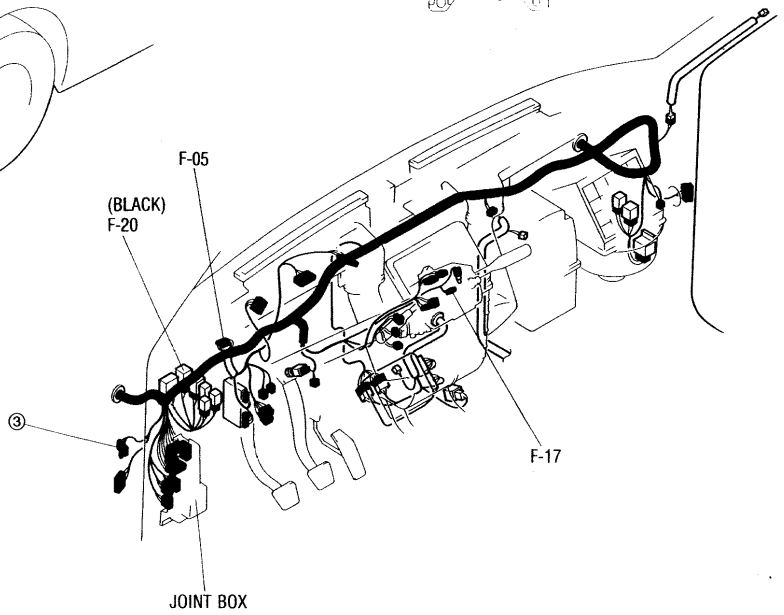

Downloaded from www.Manualslib.com manuals search engine

■ REAR WIPER & WASHER

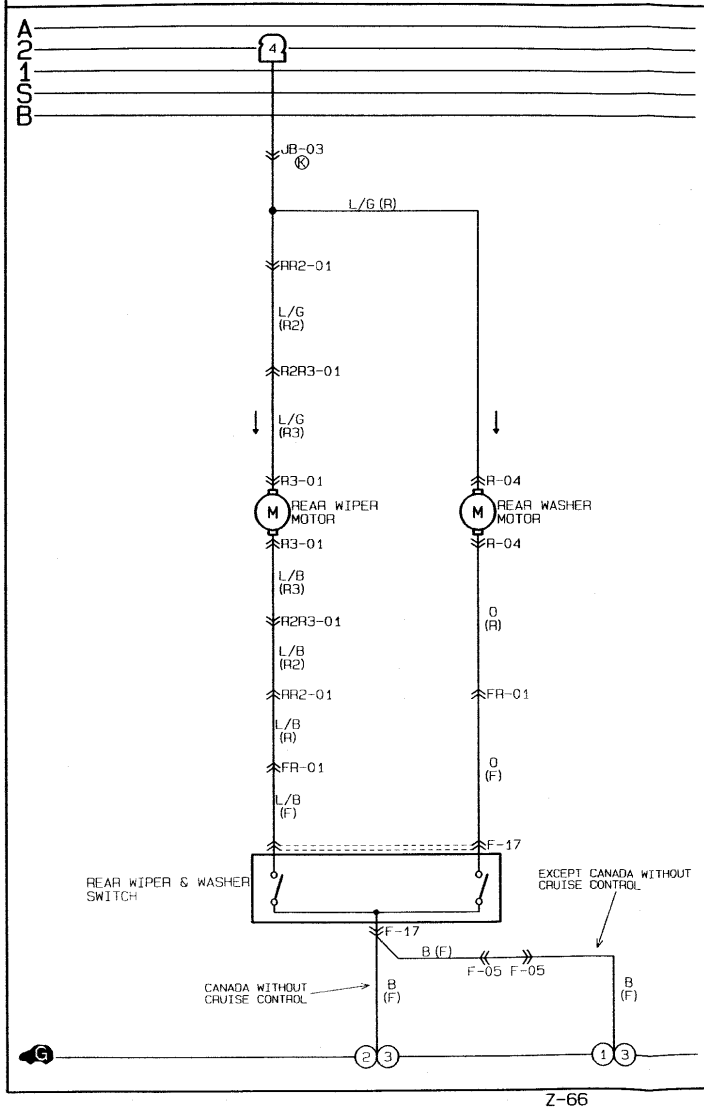

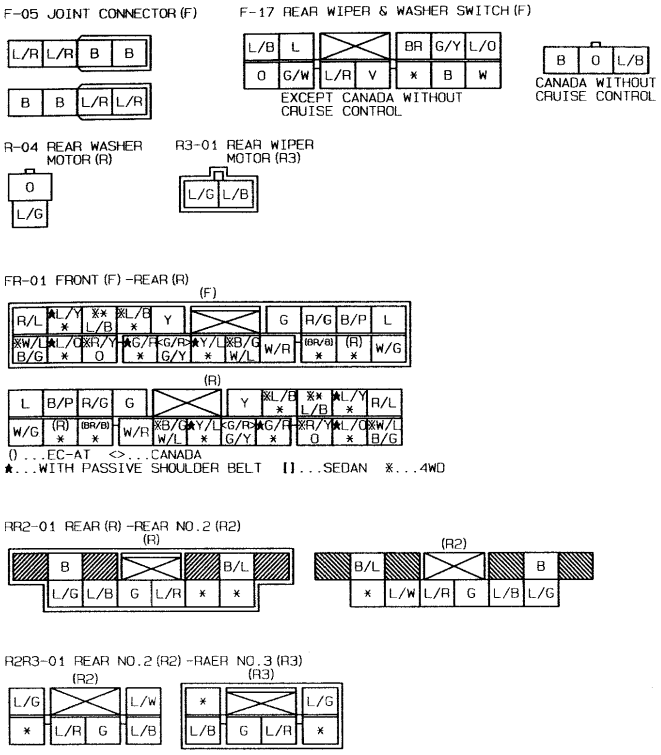

Downloaded from www.Manualslib.com manuals search engine

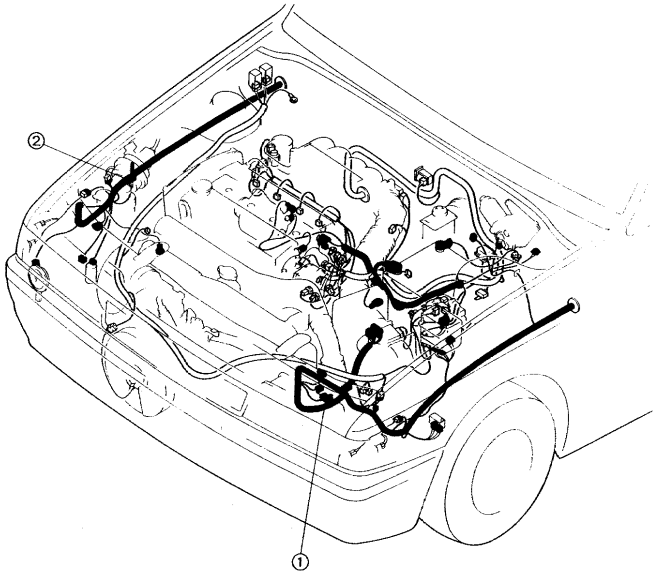

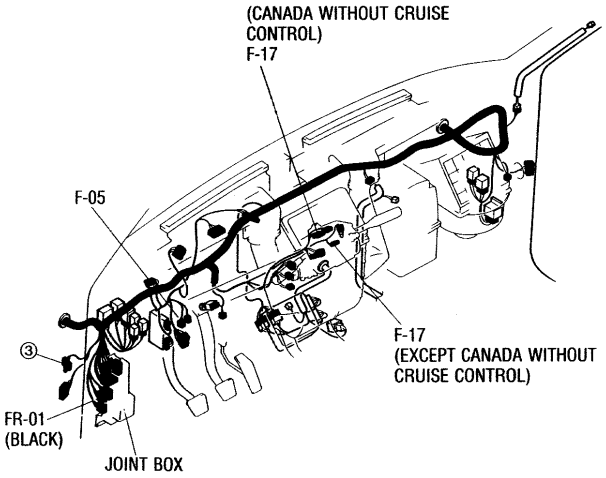

JOINT BOX

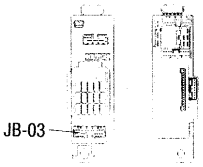

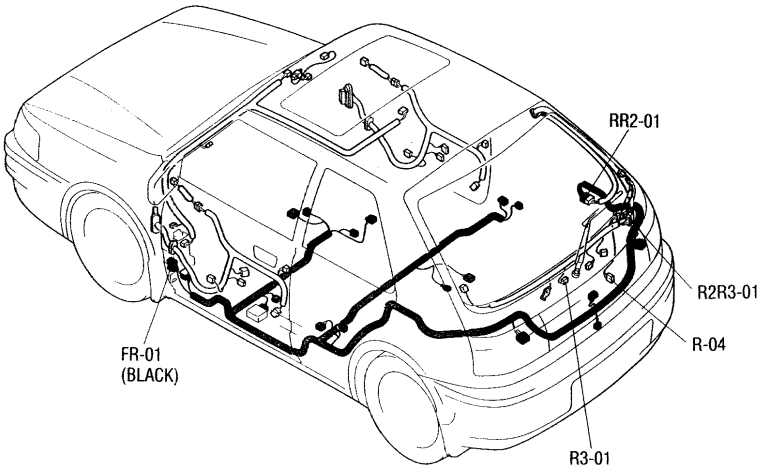

Downloaded from www.Manualslib.com manuals search engine

CANADA WITHOUT CRUISE CONTROL ■ HEADLIGHTS

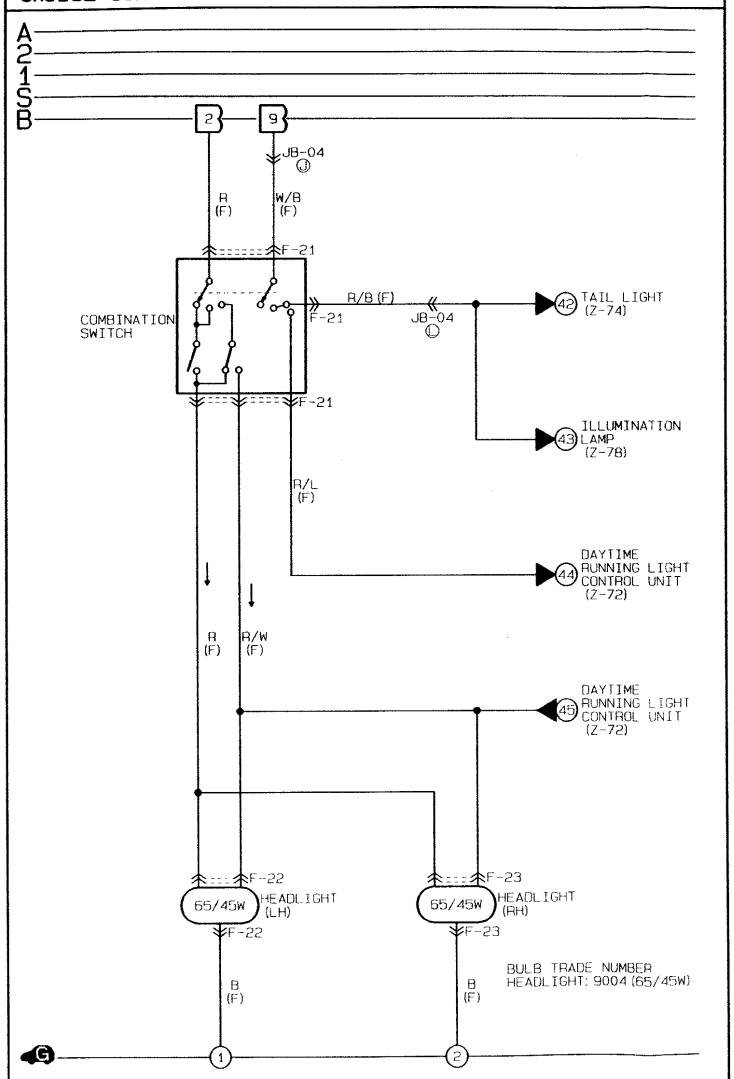

F-21 COMBINATION SWITCH (F)

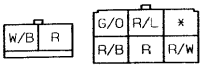

F-22 HEADLIGHT LH (F)

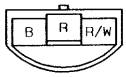

F-23 HEADLIGHT RH (F)

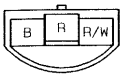

Downloaded from www.Manualslib.com manuals search engine

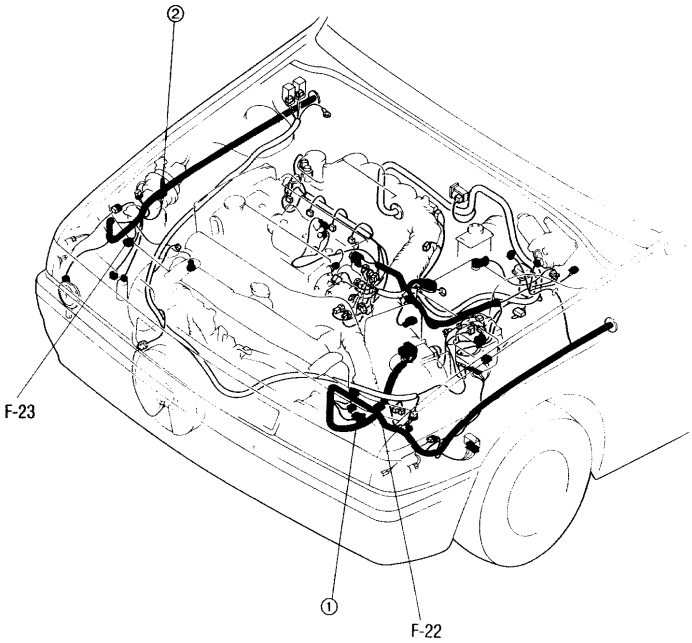

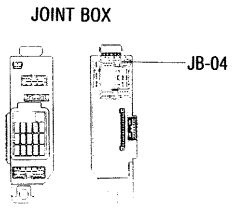

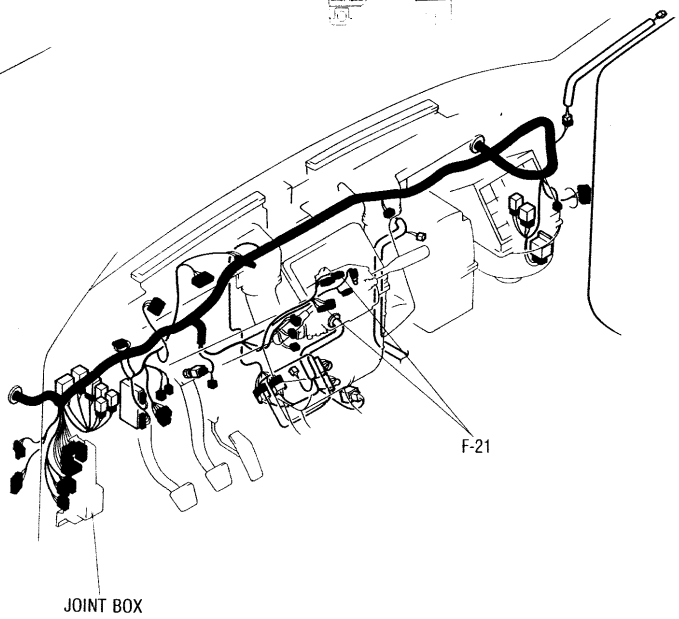

Downloaded from www.Manualslib.com manuals search engine

EXCEPT CANADA
WITHOUT CRUISE CONTROL

■ HEADLIGHTS

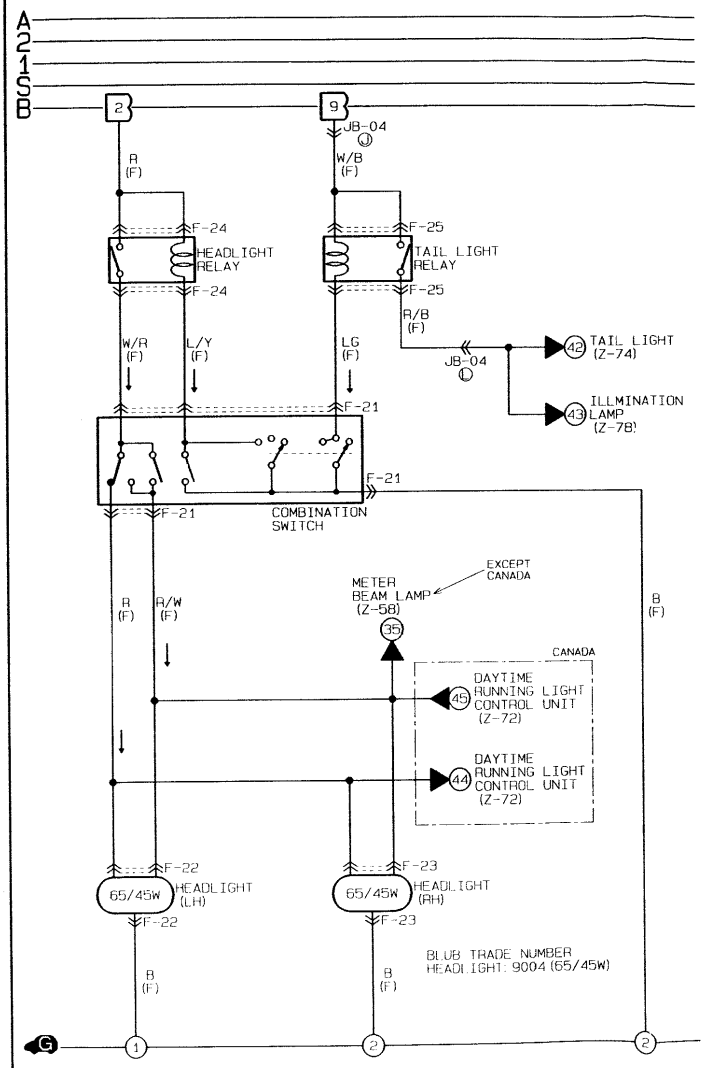

F-21 COMBINATION SWITCH (F)

R/W	R	W/R
B	L/Y	LG

F-22 HEADLIGHT LH (F)

B	R	R/W

F-23 HEADLIGHT RH (F)

B	R	R/W

F-24 HEADLIGHT RELAY (F)

R	R
W/R	L/Y

F-25 TAIL LIGHT RELAY (F)

W/B	W/B
R/B	LG

Downloaded from www.Manualslib.com manuals search engine

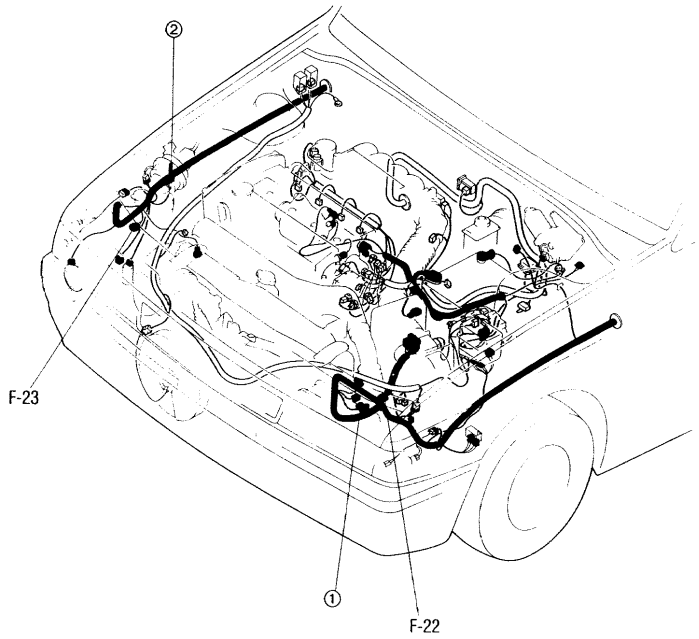

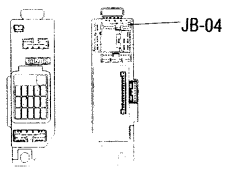

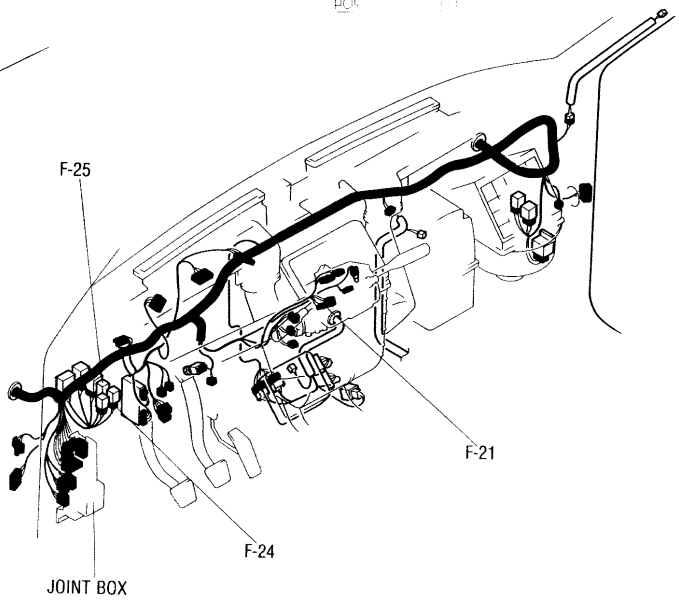

Downloaded from www.Manualslib.com manuals search engine

CANADA ■ DAYTIME RUNNING LIGHTS

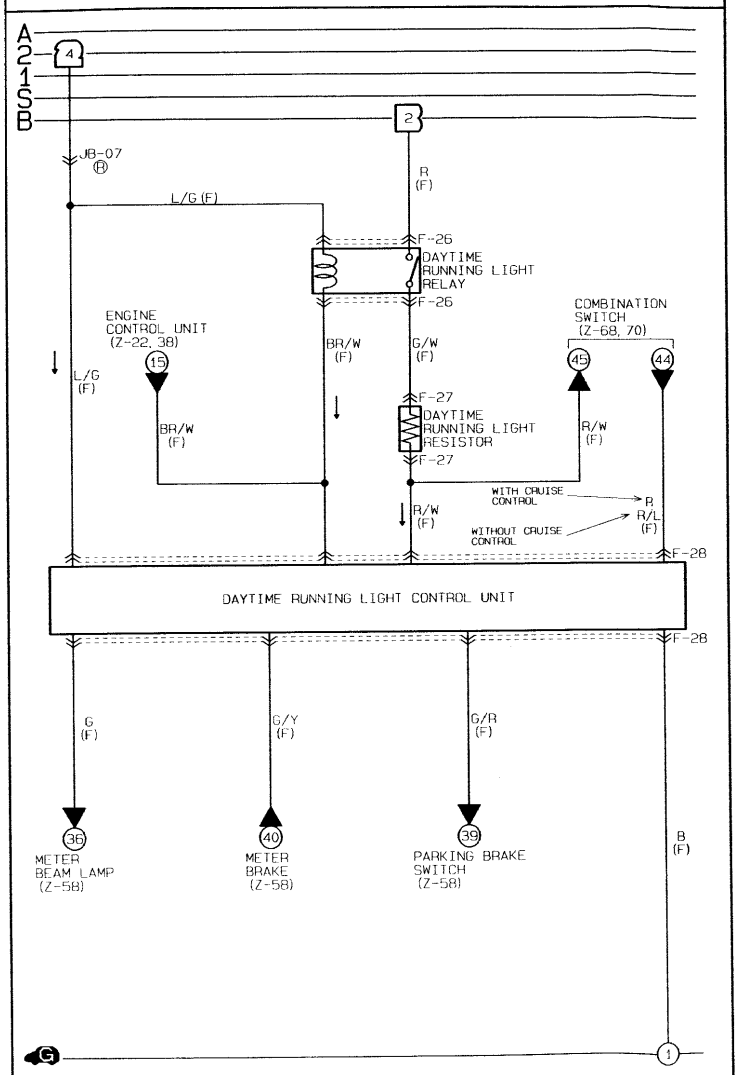

F-26 DAYTIME RUNNING LIGHT RELAY (F)

F-27 DAYTIME RUNNING LIGHT RESISTOR (F)

F-28 DAYTIME RUNNING LIGHT CONTROL UNIT (F)

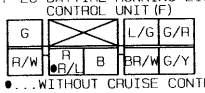

●...WITHOUT CRUISE CONTROL

Downloaded from www.Manualslib.com manuals search engine

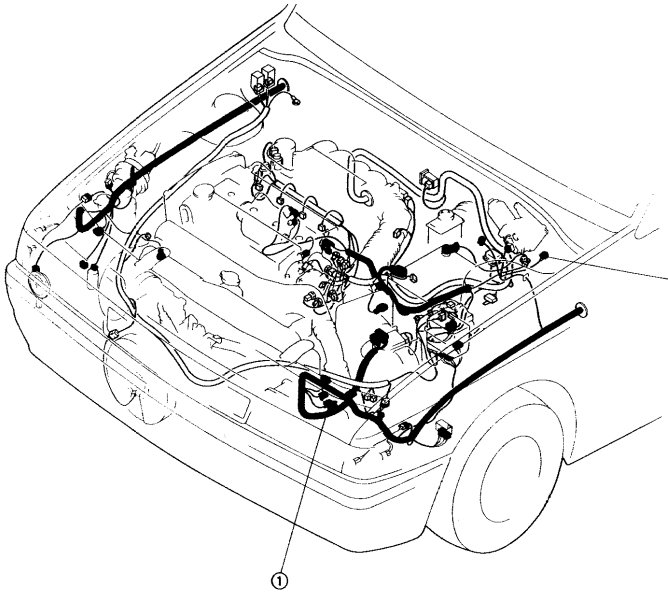

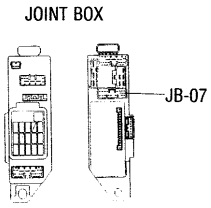

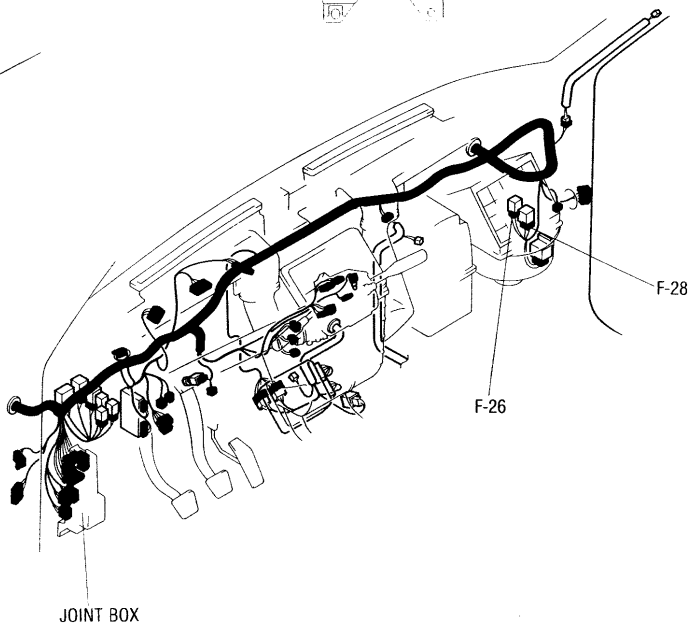

Downloaded from www.Manualslib.com manuals search engine

■SIDE MARKER LIGHTS ■LICENSE PLATE LIGHTS ■TAIL LIGHTS

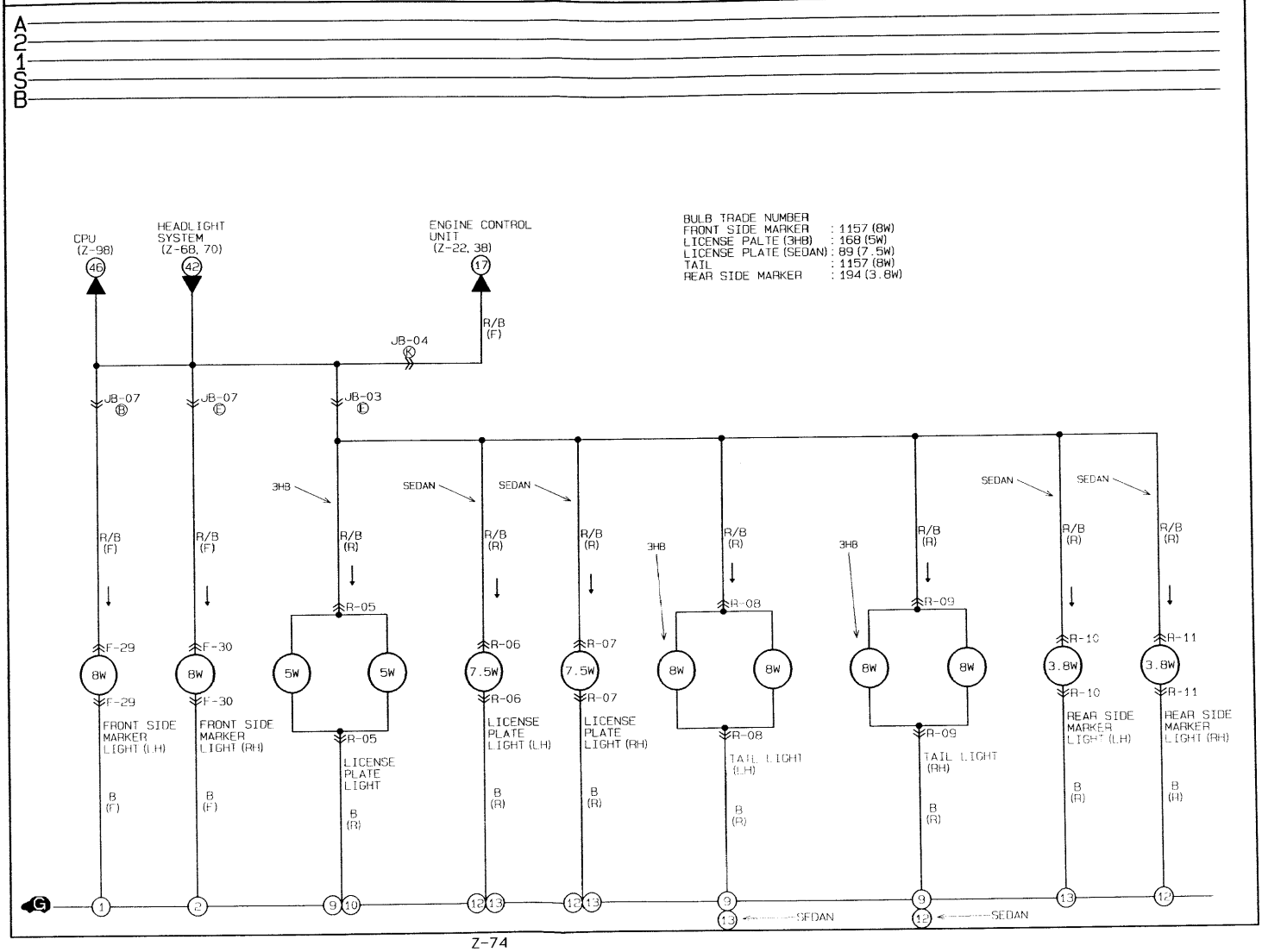

Downloaded from www.Manualslib.com manuals search engine

F-29 FRONT SIDE MARKER LIGHT LH (F)

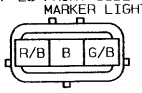

F-30 FRONT SIDE MARKER LIGHT RH (F)

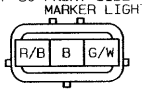

R-05 LICENSE PLATE LIGHT (R)

R-06 LICENSE PLATE LIGHT LH (R)

R-07 LICENSE PLATE LIGHT RH (R)

R-08 TAIL LIGHT LH (R)

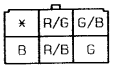

R-09 TAIL LIGHT RH (R)

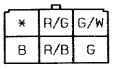

R-10 REAR SIDE MARKER LIGHT LH (R)

R-11 REAR SIDE MARKER LIGHT RH (R)

Downloaded from www.Manualslib.com manuals search engine

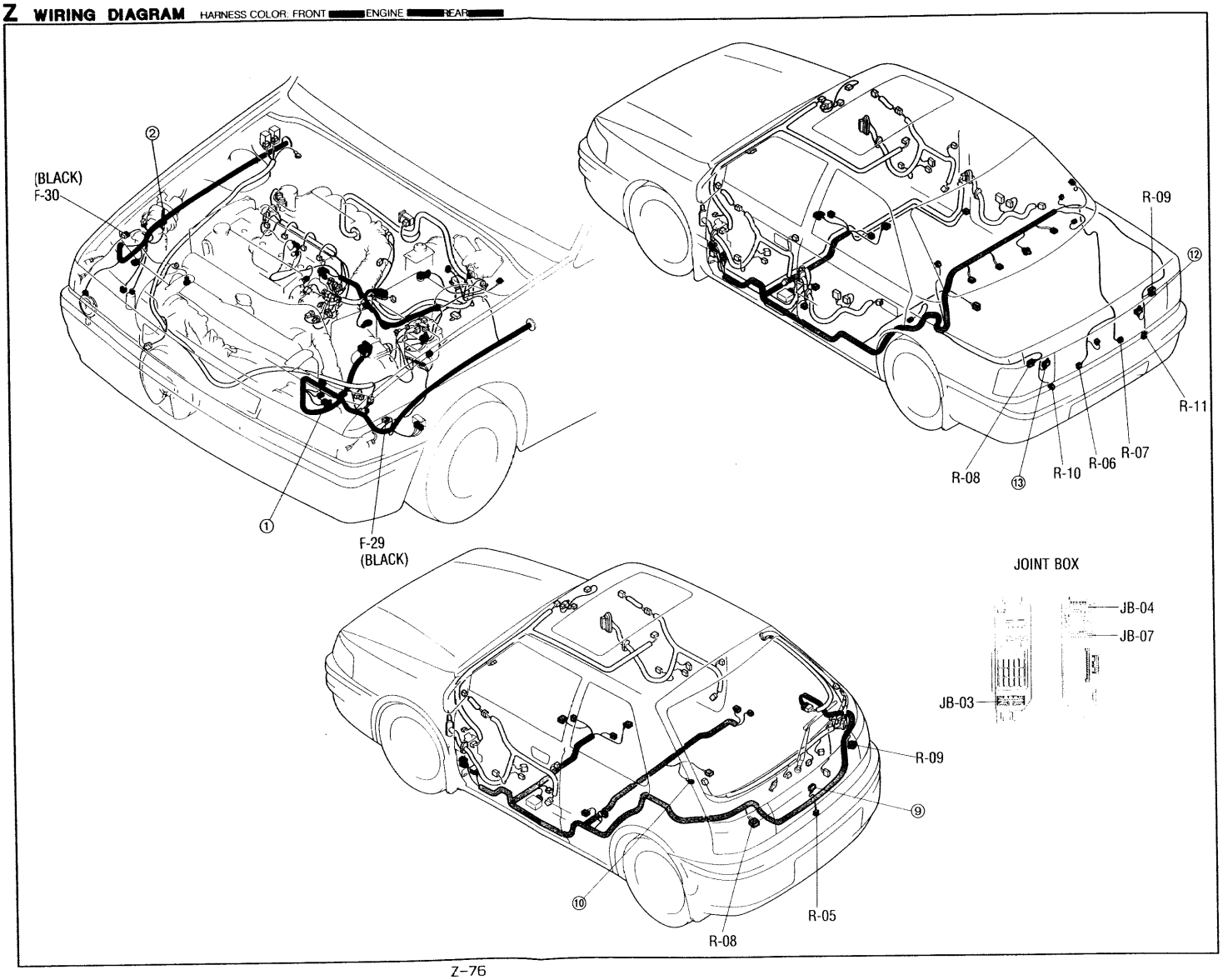

Downloaded from www.Manualslib.com manuals search engine

Downloaded from www.Manualslib.com manuals search engine

■ ILLUMINATION LAMPS

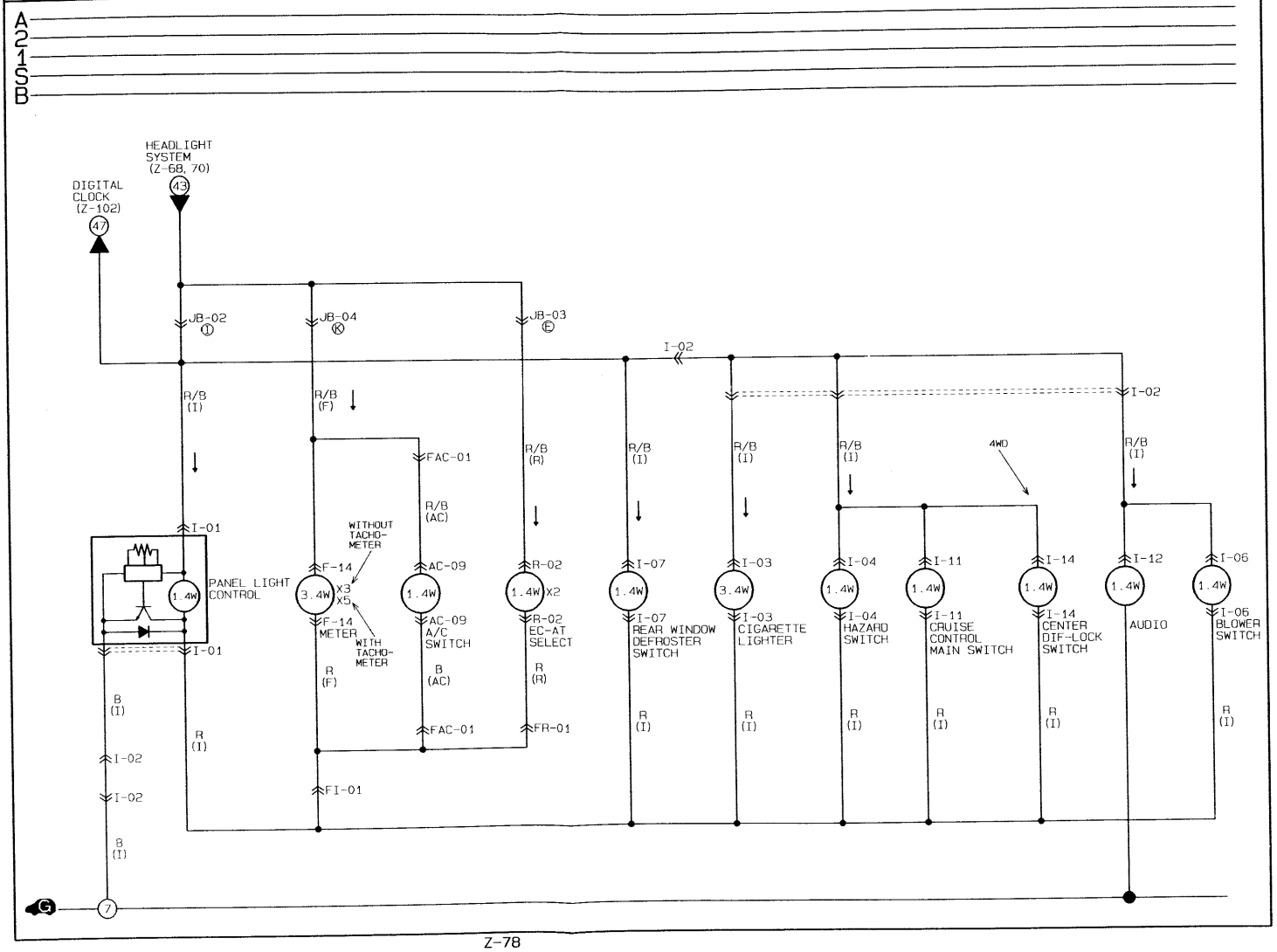

Downloaded from www.Manualslib.com manuals search engine

F-14 METER (F)

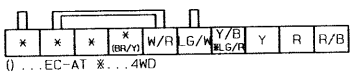

() . . . EC-AT ✱. . . 4WD

I-01 PANEL LIGHT CONTROL (I)

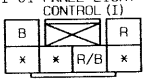

I-02 JOINT CONNECTOR (I)

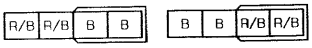

I-03 CIGARETTE LIGHTER ILLUMINATION LAMP (I)

I-04 HAZARD SWITCH (I)

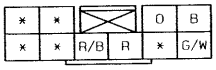

I-06 BLOWER SWITCH (I)

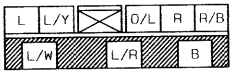

I-07 REAR WINDOW DEFROSTER SWITCH (I)

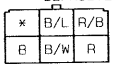

I-11 CRUISE CONTROL MAIN SWITCH (I)

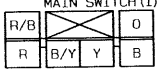

I-12 AUDIO (I)

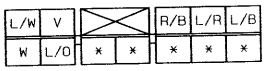

I-14 CENTER DIF-LOCK SWITCH (I)

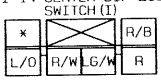

R-02 EC-AT SELECT (R)

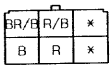

AC-09 A/C SWITCH (AC)

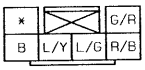

FI-01 FRONT (F) -INSTRUMENT PANEL (I)

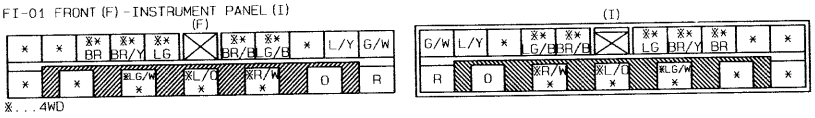

✱. . . 4WD

FR-01 FRONT (F) -REAR (R)

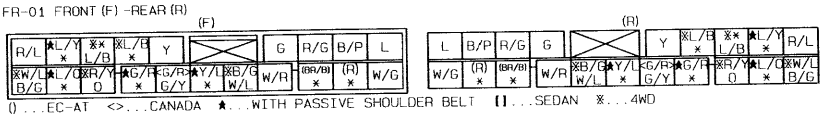

() . . . EC-AT <>. . . CANADA ★. . . WITH PASSIVE SHOULDER BELT [ ] . . . SEDAN ✱. . . 4WD

FAC-01 FRONT (F) -A/C (AC)

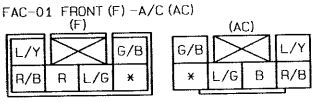

Downloaded from www.Manualslib.com manuals search engine

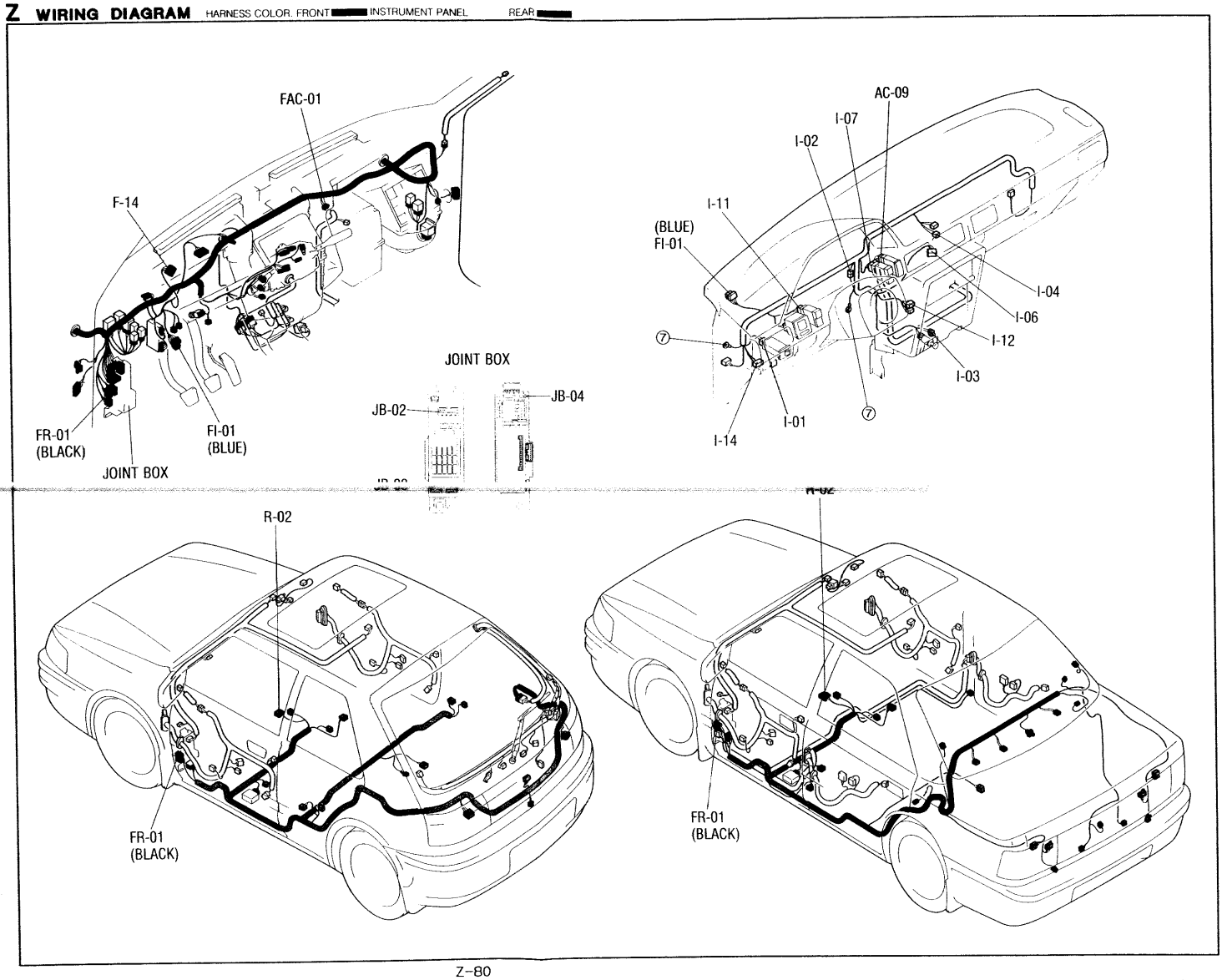

Downloaded from www.Manualslib.com manuals search engine

Downloaded from www.Manualslib.com manuals search engine

■ TURN & HAZARD FLASHER LIGHTS

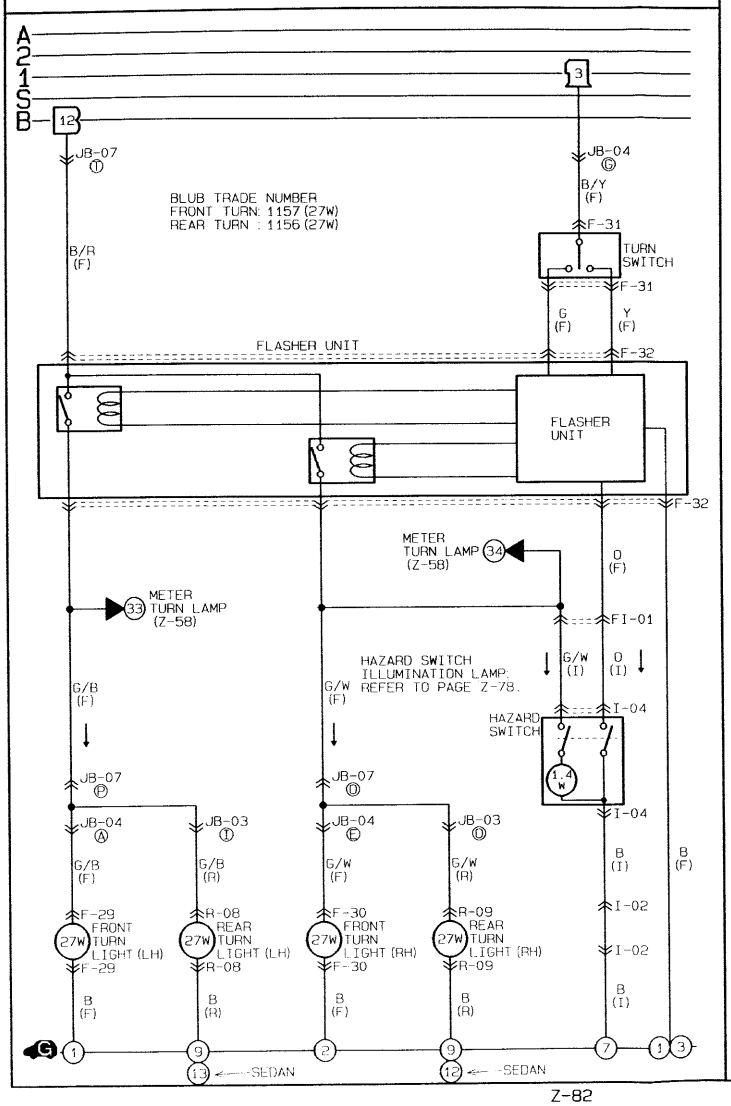

F-31 TURN SWITCH (F)

Y	*	*	*
B/Y	G	*	*

CANADA WITHOUT CRUISE CONTROL

●* R	●* B	G/O	Y	G	B/Y

●...WITHOUT CRUISE CONTROL
EXCEPT CANADA WITHOUT CRUISE CONTROL

F-32 FLASHER UNIT (F)

G/W	G	O	B
B/R	Y	G/B	*

F-29 FRONT TURN LIGHT LH (F)

R/B	B	G/B

F-30 FRONT TURN LIGHT RH (F)

R/B	B	G/W

I-02 JOINT CONNECTOR (I)

R/B	R/B	B	B
B	B	R/B	R/B

I-04 HAZARD SWITCH (I)

*	*			O	B
*	*	R/B	R	*	G/W

R-08 REAR TURN LIGHT LH (R)

*	R/G	G/B
B	R/B	G

R-09 REAR TURN LIGHT RH (R)

*	R/G	G/W
B	R/B	G

FI-01 FRONT (F) - INSTRUMENT PANEL (I)

(F)

*	*	※* BR	※* BR/Y	※* LG		※* BR/B	※* LG/B	*	L/Y	G/W
*	*	※LG/W *		※L/O *		※R/W *		O		R

(I)

G/W	L/Y	*	※* LG/B	※* BR/B		※* LG	※* BR/Y	※* BR	*	*
R		O	※R/W *		※L/O *		※LG/W *		*	*

※...4WD

Downloaded from www.Manualslib.com manuals search engine

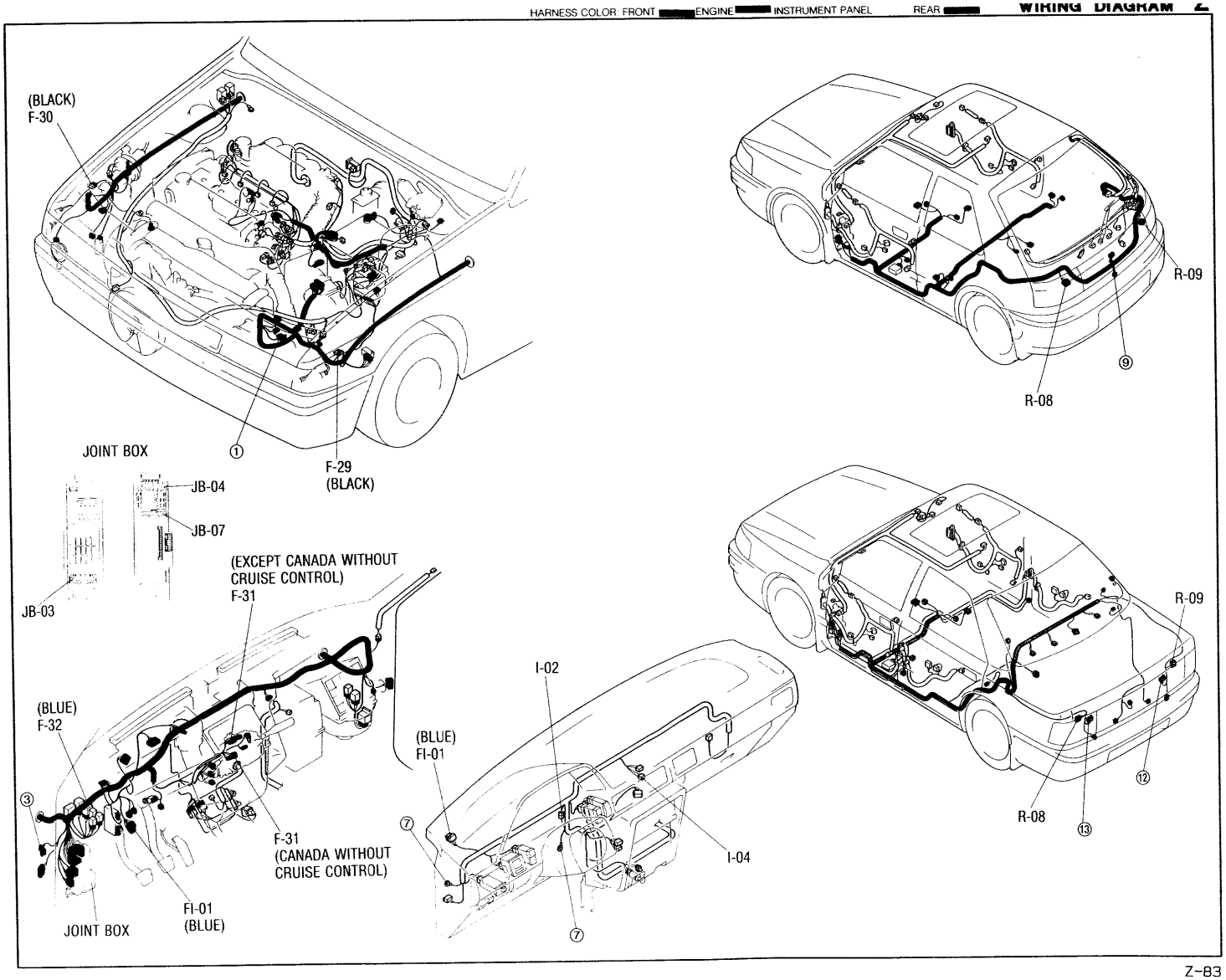

Downloaded from www.Manualslib.com manuals search engine

- STOP LIGHTS
- SHIFT LOCK SYSTEM

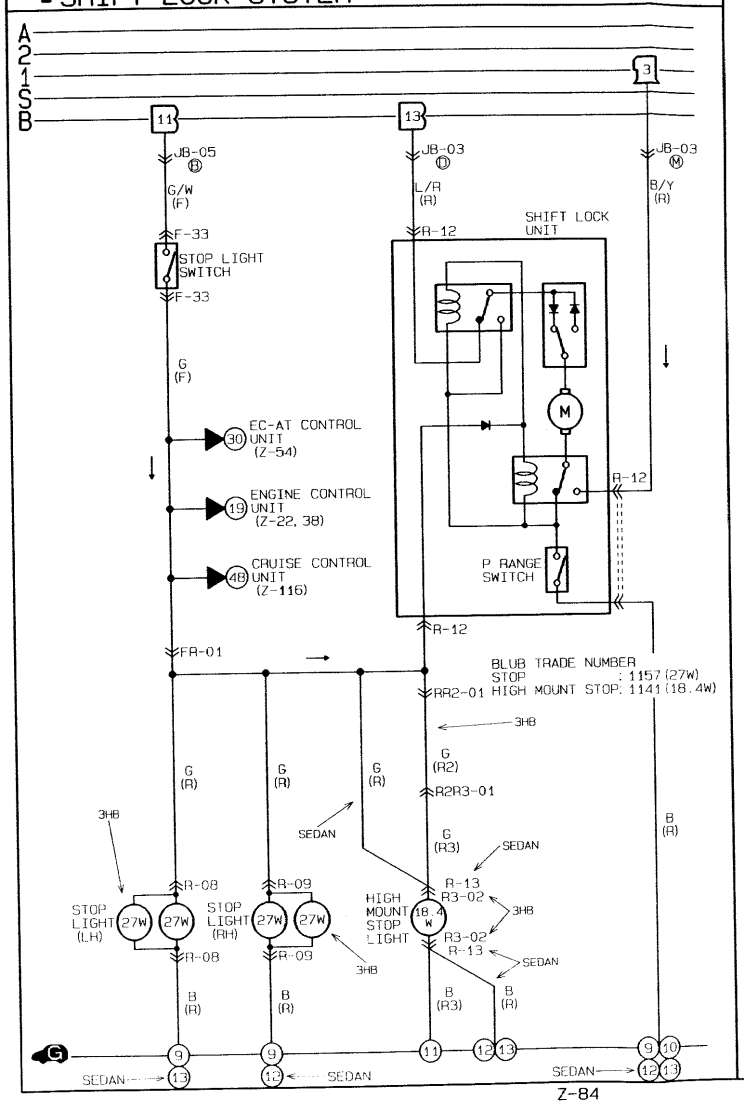

F-33 STOP LIGHT SWITCH (F)

R-08 STOP LIGHT LH (R)

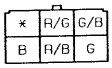

R-09 STOP LIGHT RH (R)

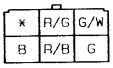

R-12 SHIFT LOCK UNIT (R)

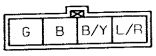

R-13 HIGH MOUNT STOP LIGHT (R)

R3-02 HIGH MOUNT STOP LIGHT (R3)

FR-01 FRONT (F) -REAR (R)

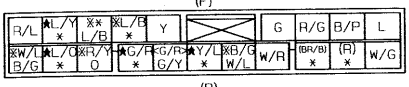

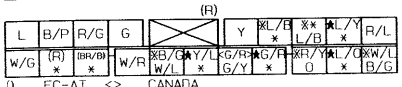

() ...EC-AT <>...CANADA
★...WITH PASSIVE SHOULDER BELT [] ...SEDAN ※...4WD

RR2-01 REAR (R) -REAR NO.2 (R2)

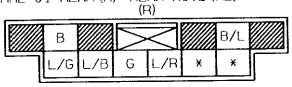

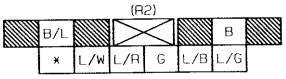

R2R3-01 REAR NO.2 (R2) -RAER NO.3 (R3)

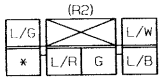

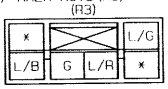

Downloaded from www.Manualslib.com manuals search engine

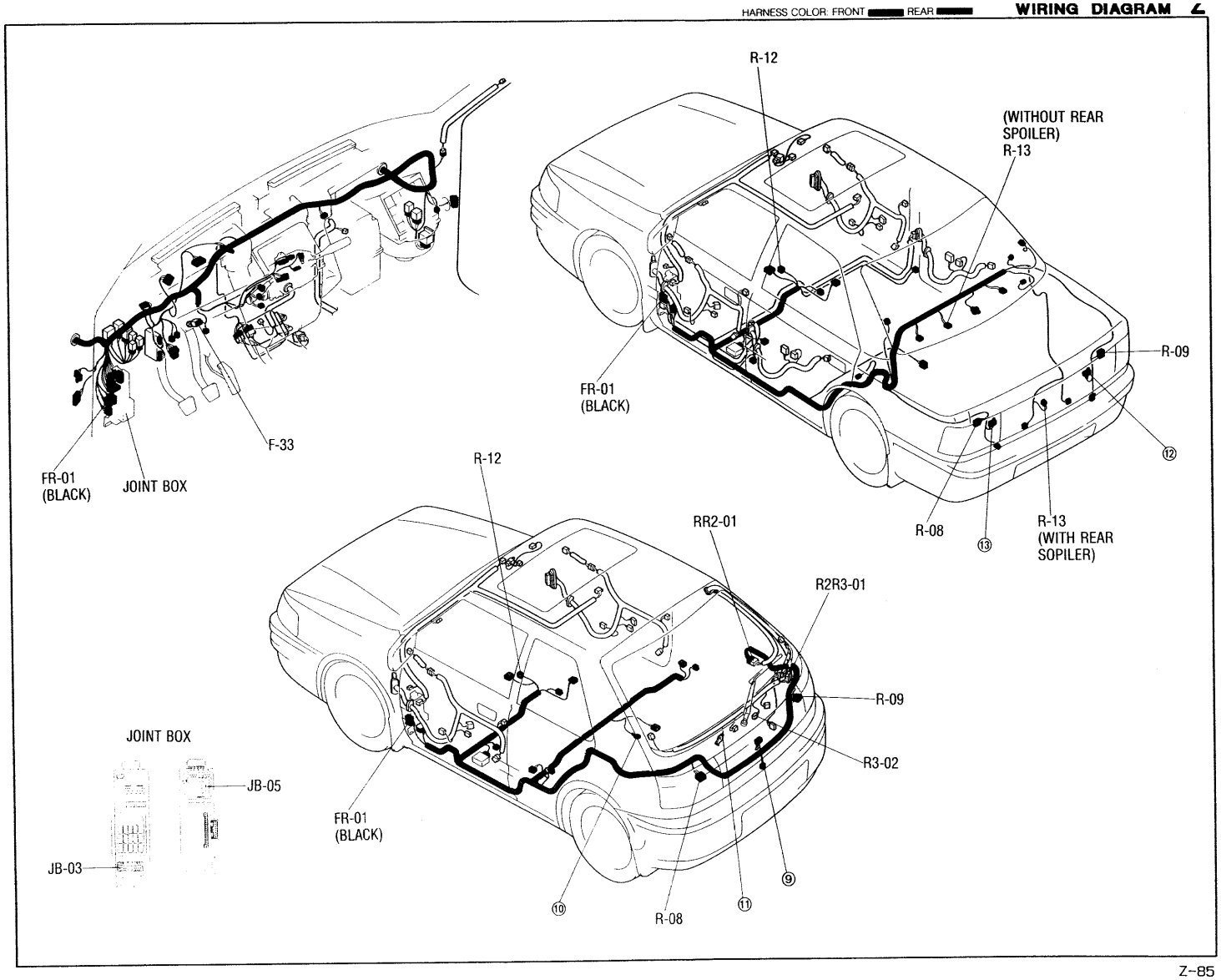

Downloaded from www.Manualslib.com manuals search engine

EXCEPT 4WD
- HORN
- BACK-UP LIGHTS

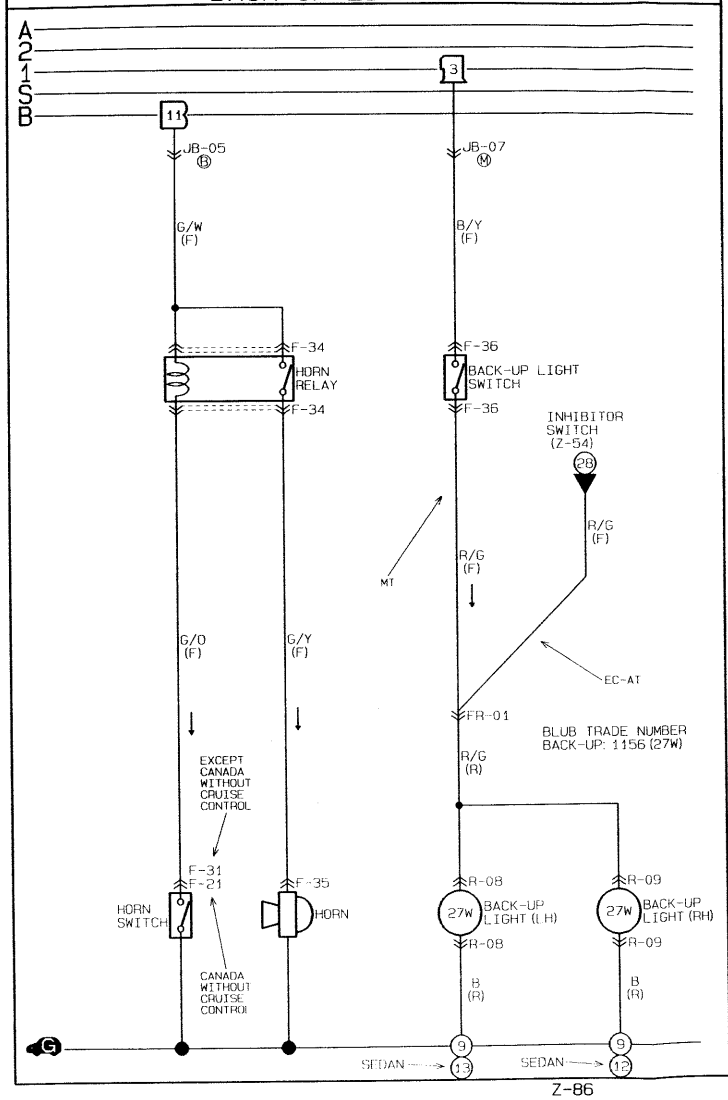

F-21 HORN SWITCH (F)

G/O	R/L	*
R/B	R	R/W

F-31 HORN SWITCH (F)

●* R	●* B	G/O	Y	G	B/Y

●...WITHOUT CRUISE CONTROL

F-34 HORN RELAY (F)

G/Y	G/O	G/W
	G/W	

F-35 HORN (F)

G/Y

F-36 BACK-UP LIGHT SWITCH (F)

R/G	*
B/Y	*

R-08 BACK-UP LIGHT LH (R)

*	R/G	G/B
B	R/B	G

R-09 BACK-UP LIGHT RH (R)

*	R/G	G/W
B	R/B	G

FR-01 FRONT (F) -REAR (R)

(F)

R/L	★L/Y *	※※ L/B	※L/B *	Y		G	R/G	B/P	L		
※W/L B/G	★L/O *	※R/Y O	★G/R *	※G/R G/Y	★Y/L *	※B/G W/L	W/R	(BR/B) *	(R) *	W/G	

(R)

L	B/P	R/G	G		Y	※L/B *	※※ L/B	★L/Y *	R/L		
W/G	(R) *	(BR/B) *	W/R	※B/G W/L	★Y/L *	※G/R G/Y	★G/R *	※R/Y O	★L/O *	※W/L B/G	

()...EC-AT <>...CANADA
★...WITH PASSIVE SHOULDER BELT [ ]...SEDAN ※...4WD

Downloaded from www.Manualslib.com manuals search engine

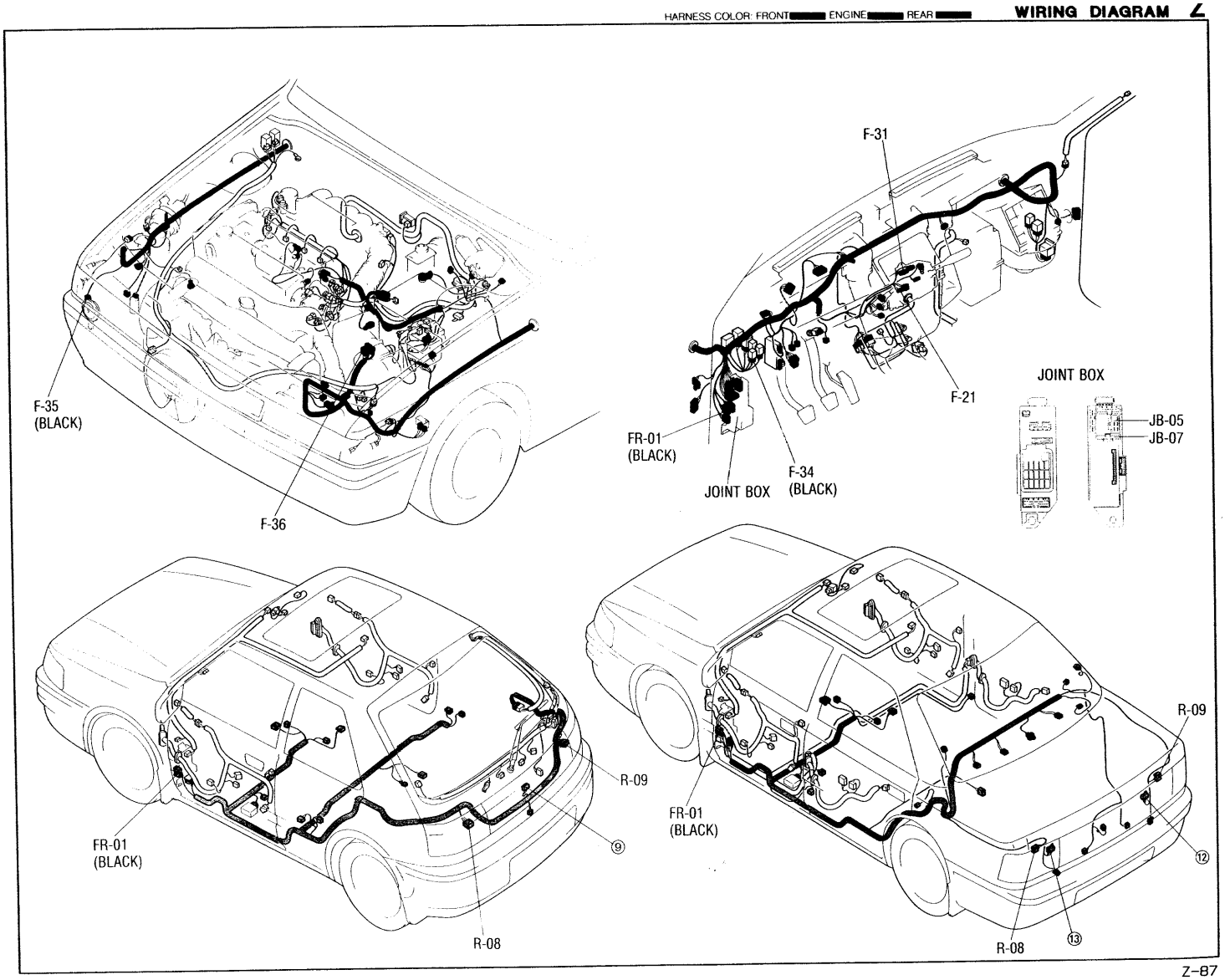

Downloaded from www.Manualslib.com manuals search engine

4WD
- HORN
- BACK-UP LIGHTS

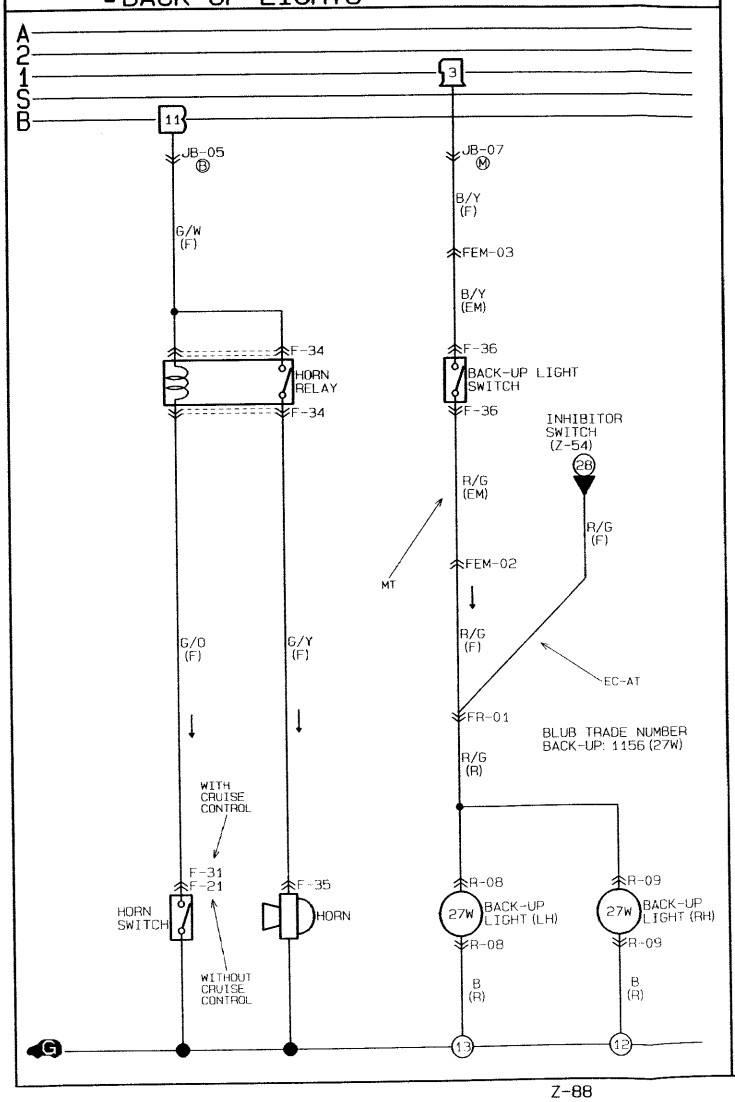

F-21 HORN SWITCH (F)

G/O	R/L	*
R/B	R	R/W

F-31 HORN SWITCH (F)

R	B	G/O	Y	G	B/Y

F-34 HORN RELAY (F)

	G/O	
G/Y		G/W
	G/W	

F-35 HORN (F)

G/Y	

EM-18 BACK-UP LIGHT SWITCH (EM)

B/Y	*
R/G	*

R-08 BACK-UP LIGHT LH (R)

*	R/G	G/B
B	R/B	G

R-09 BACK-UP LIGHT RH (R)

*	R/G	G/W
B	R/B	G

FR-01 FRONT (F) -REAR (R)

(F)

R/L	★L/Y *	※* L/B	※L/B *	Y				G	R/G	B/P	L				
※W/L B/G	★L/O *	※R/Y O	★G/R *	<G/R> G/Y	★Y/L *	※B/G W/L		W/R	[BR/B] *	(R) *	W/G				

(R)

L	B/P	R/G	G					Y	※L/B *	※* L/B	★L/Y *	R/L			
W/G	(R) *	[BR/B] *	W/R	※B/G W/L	★Y/L *	<G/R> G/Y	★G/R *	※R/Y O	★L/O *	※W/L B/G					

() . . .EC-AT <>. . .CANADA
★. . .WITH PASSIVE SHOULDER BELT [] . . .SEDAN ※. . .4WD

FEM-02 FRONT (F) -EMISSION (EM)

(F)

B	Y/B	(L/G) *	(R/W) *	(G/R) G				(*) BR/Y	<B/Y> *	*	(LG/W) *				
※R/G *	L/Y	*	(W) *	(R) G/Y	<BR/W> *	※R/G *	※Y/W *	[BL/G] *	B/L	(LG/R) *					

(EM)

(LG/W) *	*	<B/Y> *	(*) BR/Y				(G/R) G	(R/W) *	(L/G) *	Y/B	B				
(LG/R) *	B/L	[BL/G] *	※Y/W *	※R/G *	<BR/W> *		(R) G/Y	(W) *	*	L/Y	※R/G *				

() . . .EC-AT <>. . .CANADA ※. . .4WD

FEM-03 FRONT (F) -EMISSION (EM)

(F)

*	(B/L) *
※B/Y *	L

(EM)

(B/L) *	*
L	※B/Y *

() . . .EC-AT ※. . .4WD

Downloaded from www.Manualslib.com manuals search engine

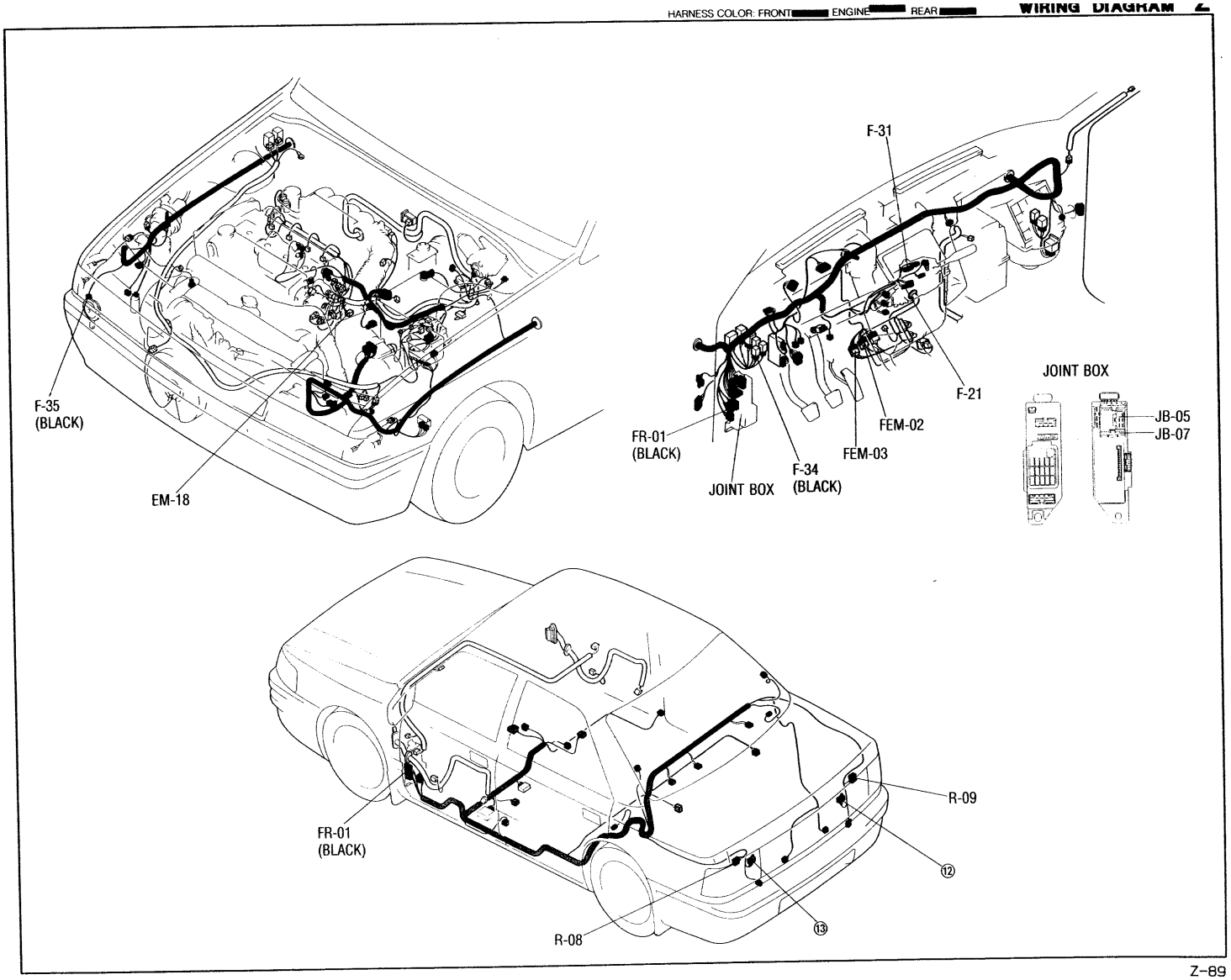

Downloaded from www.Manualslib.com manuals search engine

EXCEPT 4WD ■HEATER & AIR CONDITIONER

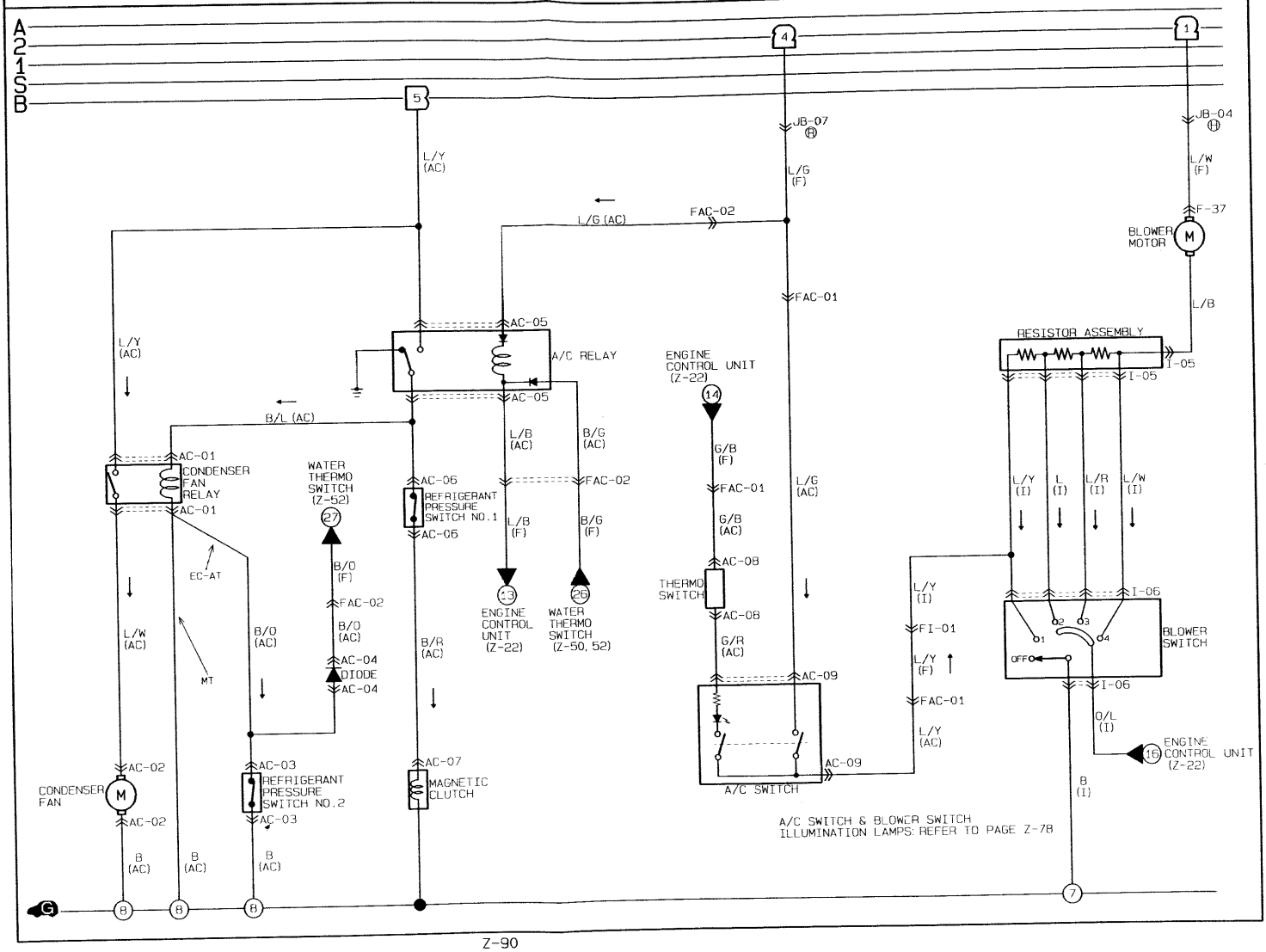

Downloaded from www.Manualslib.com manuals search engine

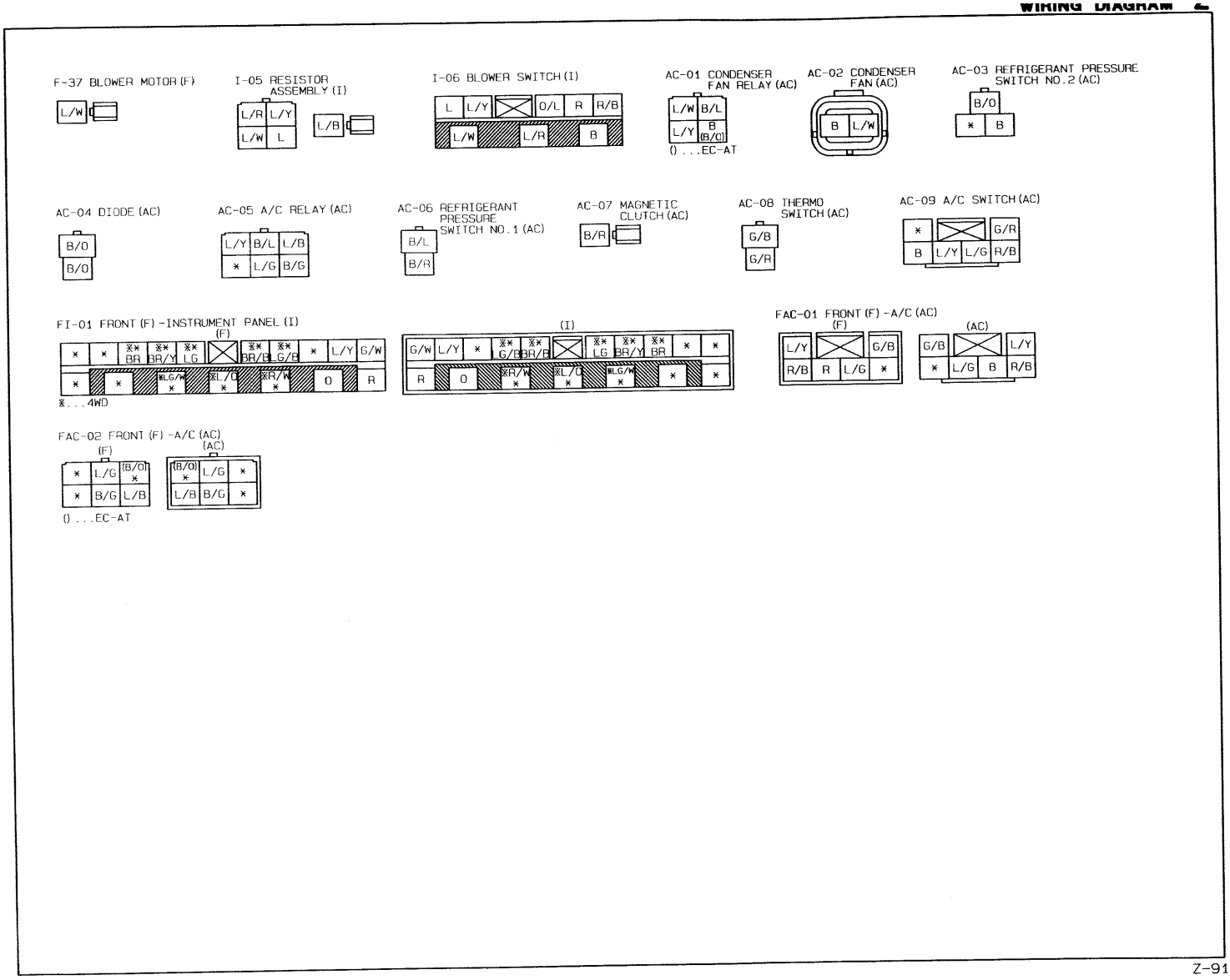

Downloaded from www.Manualslib.com manuals search engine

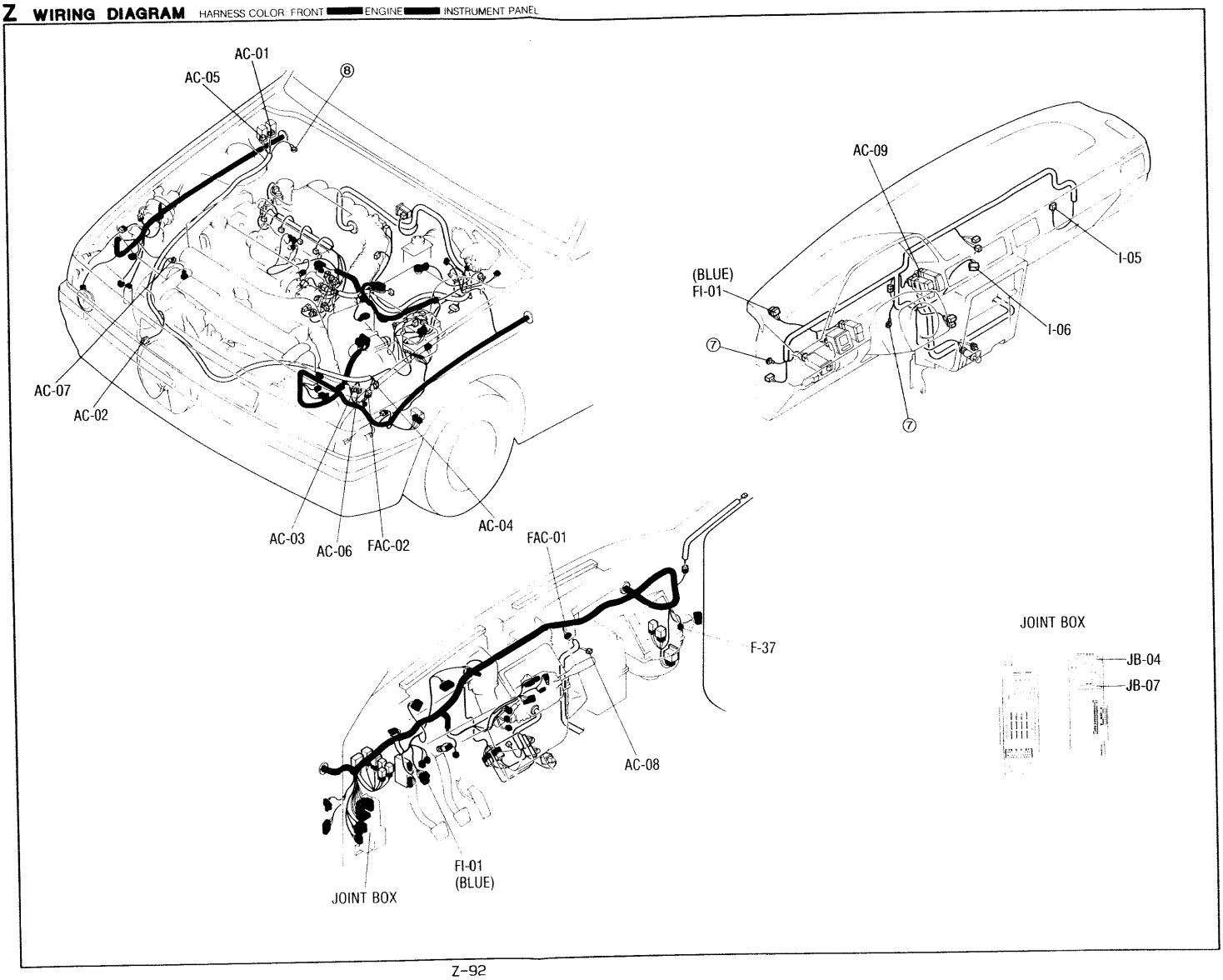

Downloaded from www.Manualslib.com manuals search engine

Downloaded from www.Manualslib.com manuals search engine

4WD ■HEATER & AIR CONDITIONER

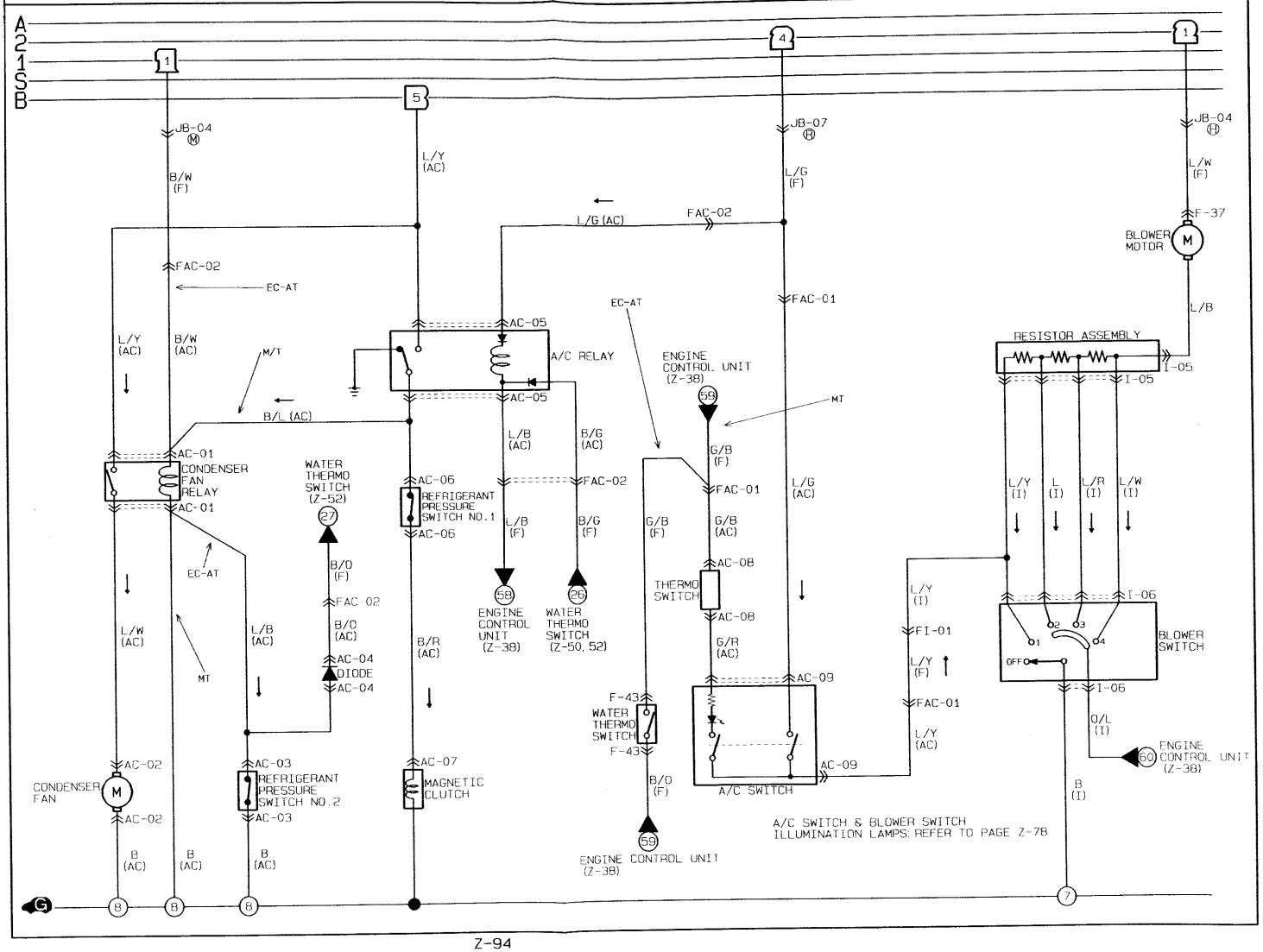

Downloaded from www.Manualslib.com manuals search engine

F-37 BLOWER MOTOR (F)

F-43 WATER THERMO SWITCH (F)

I-05 RESISTOR ASSEMBLY (I)

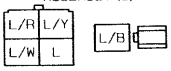

I-06 BLOWER SWITCH (I)

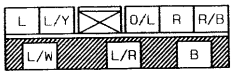

AC-01 CONDENSER FAN RELAY (AC)

() . . . EC-AT

AC-02 CONDENSER FAN (AC)

AC-03 REFRIGERANT PRESSURE SWITCH NO.2 (AC)

AC-04 DIODE (AC)

AC-05 A/C RELAY (AC)

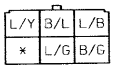

AC-06 REFRIGERANT PRESSURE SWITCH NO.1 (AC)

AC-07 MAGNETIC CLUTCH (AC)

AC-08 THERMO SWITCH (AC)

AC-09 A/C SWITCH (AC)

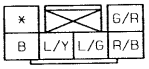

FI-01 FRONT (F) -INSTRUMENT PANEL (I)

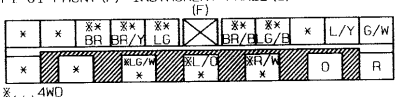

※. . . 4WD

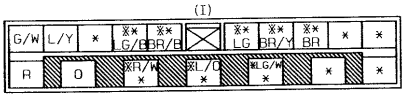

FAC-01 FRONT (F) -A/C (AC)

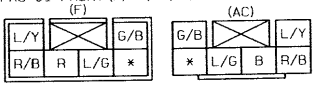

FAC-02 FRONT (F) -A/C (AC)

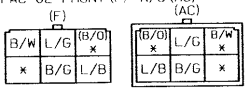

Downloaded from www.Manualslib.com manuals search engine

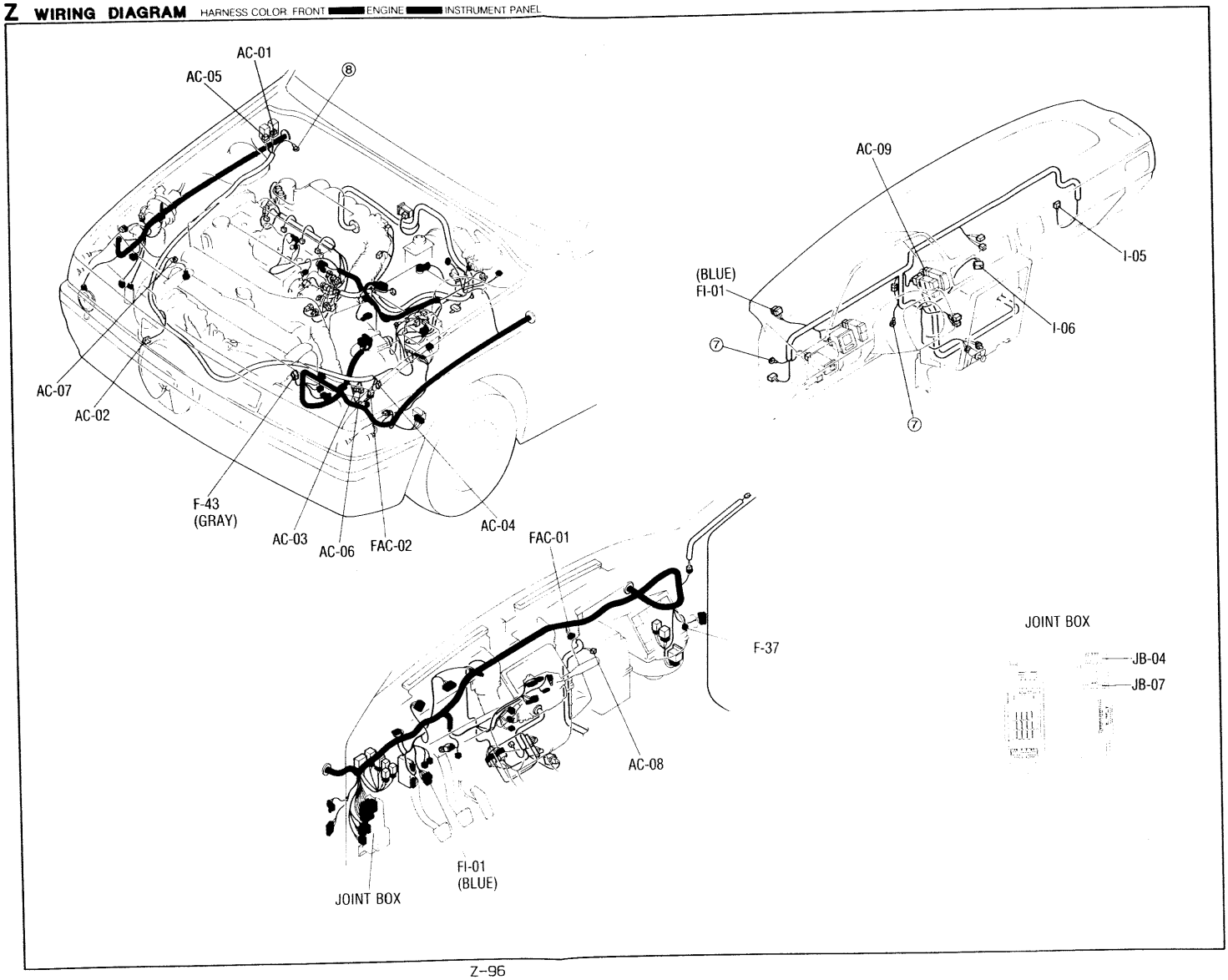

Downloaded from www.Manualslib.com manuals search engine

Downloaded from www.Manualslib.com manuals search engine

Z WIRING DIAGRAM

- INTERIOR & SPOT LAMPS
- IGNITION KEY CYLINDER LAMP
- SOUND WARNING SYSTEM

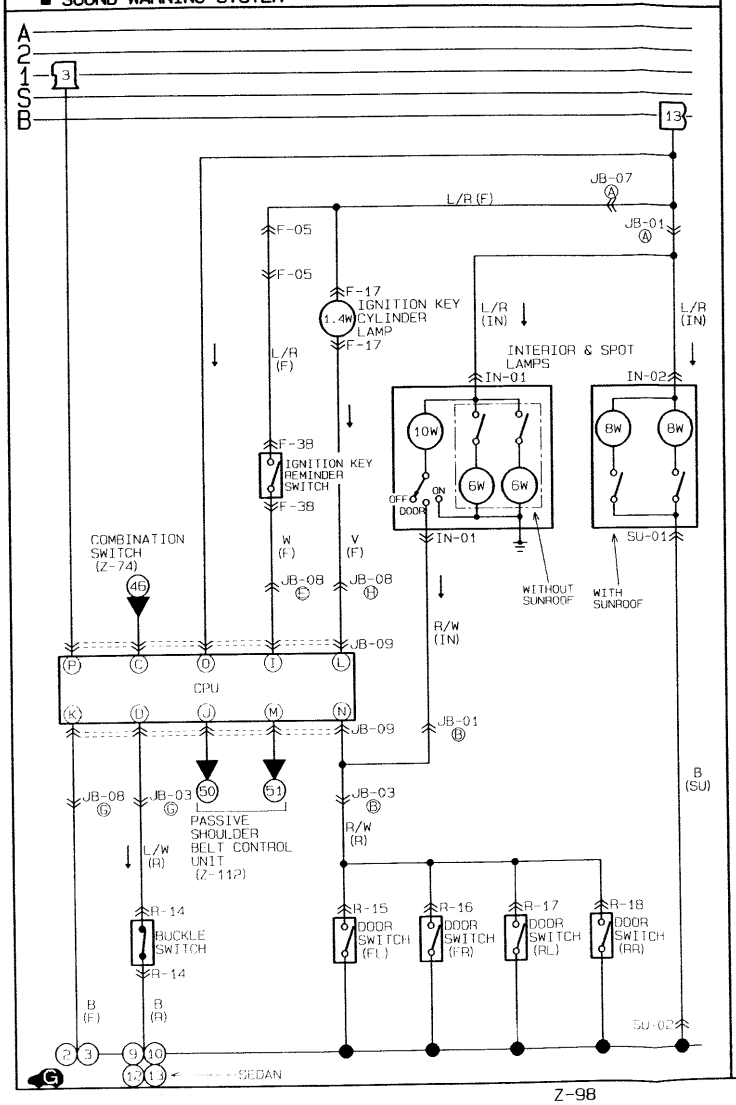

F-05 JOINT CONNECTOR (F)

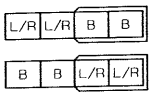

F-17 IGNITION KEY CYLINDER LAMP (F)

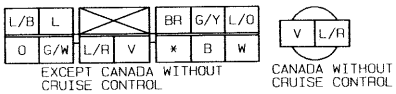

F-38 IGNITION KEY REMINDER SWITCH (F)

R-14 BUCKLE SWITCH (R)

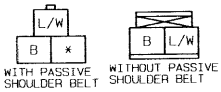

R-15 DOOR SWITCH FL (R)

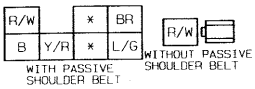

R-16 DOOR SWITCH FR (R)

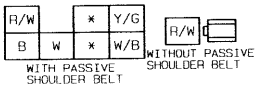

R-17 DOOR SWITCH RL (R)

R-18 DOOR SWITCH RR (R)

IN-01 INTERIOR & SPOT LAMP (IN)

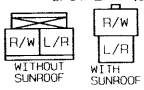

IN-02 SPOT LAMP (IN)

SU-01 SPOT LAMP (SU)

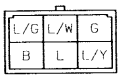

SU-02 GROUND (SU)

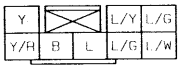

Downloaded from www.Manualslib.com manuals search engine

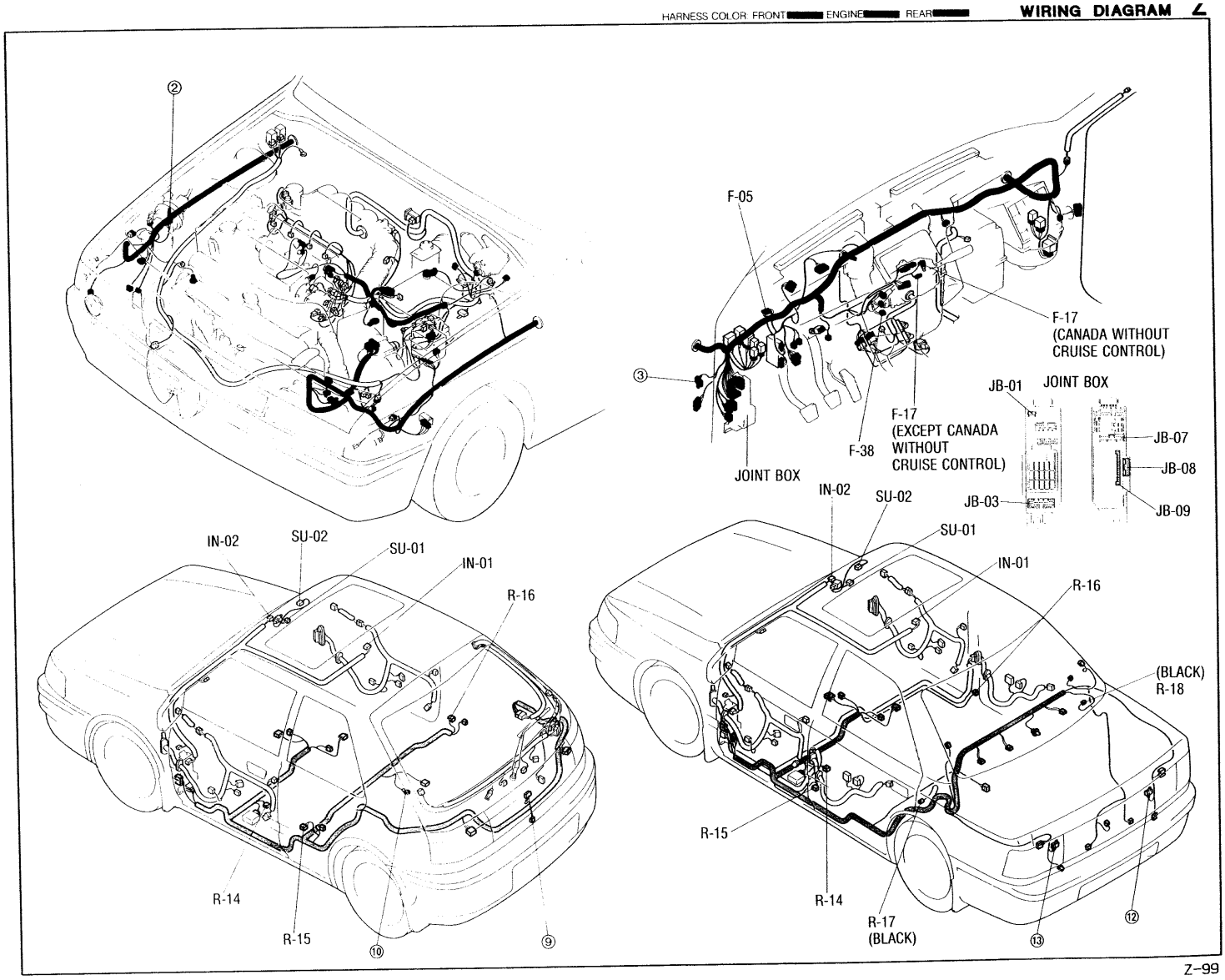

Downloaded from www.Manualslib.com manuals search engine

■ CARGO ROOM LAMP

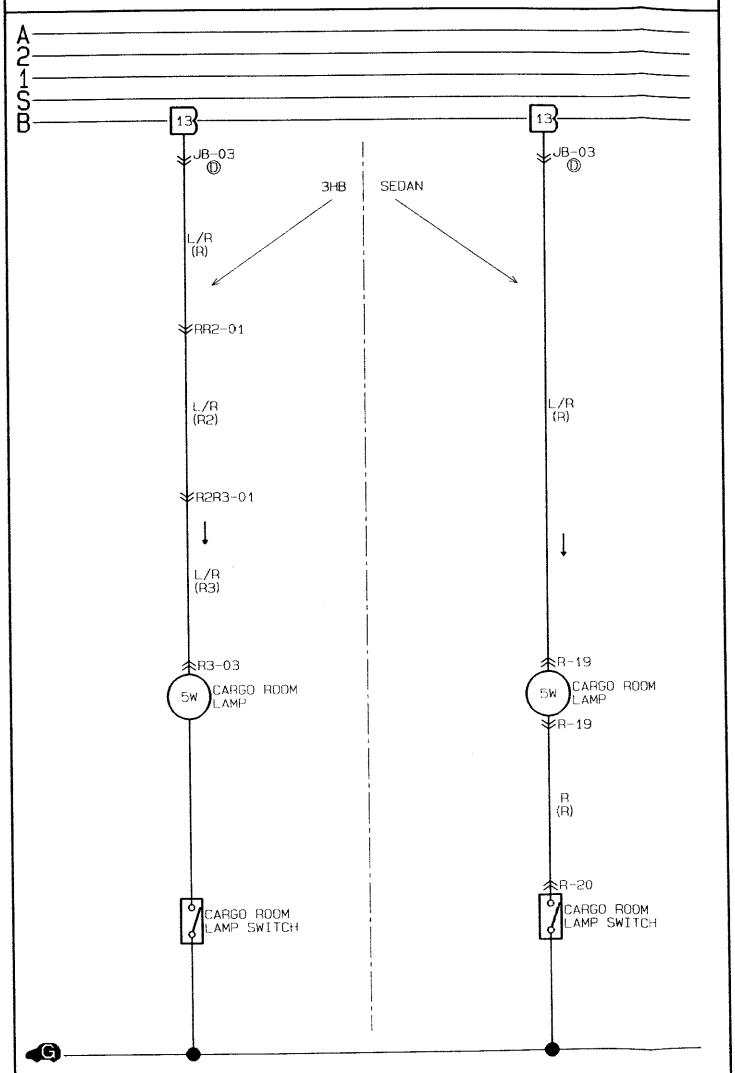

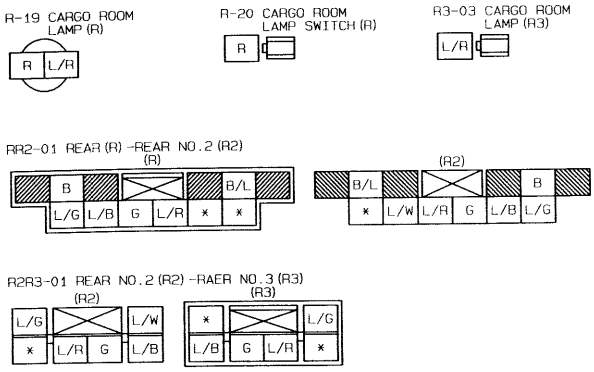

Downloaded from www.Manualslib.com manuals search engine

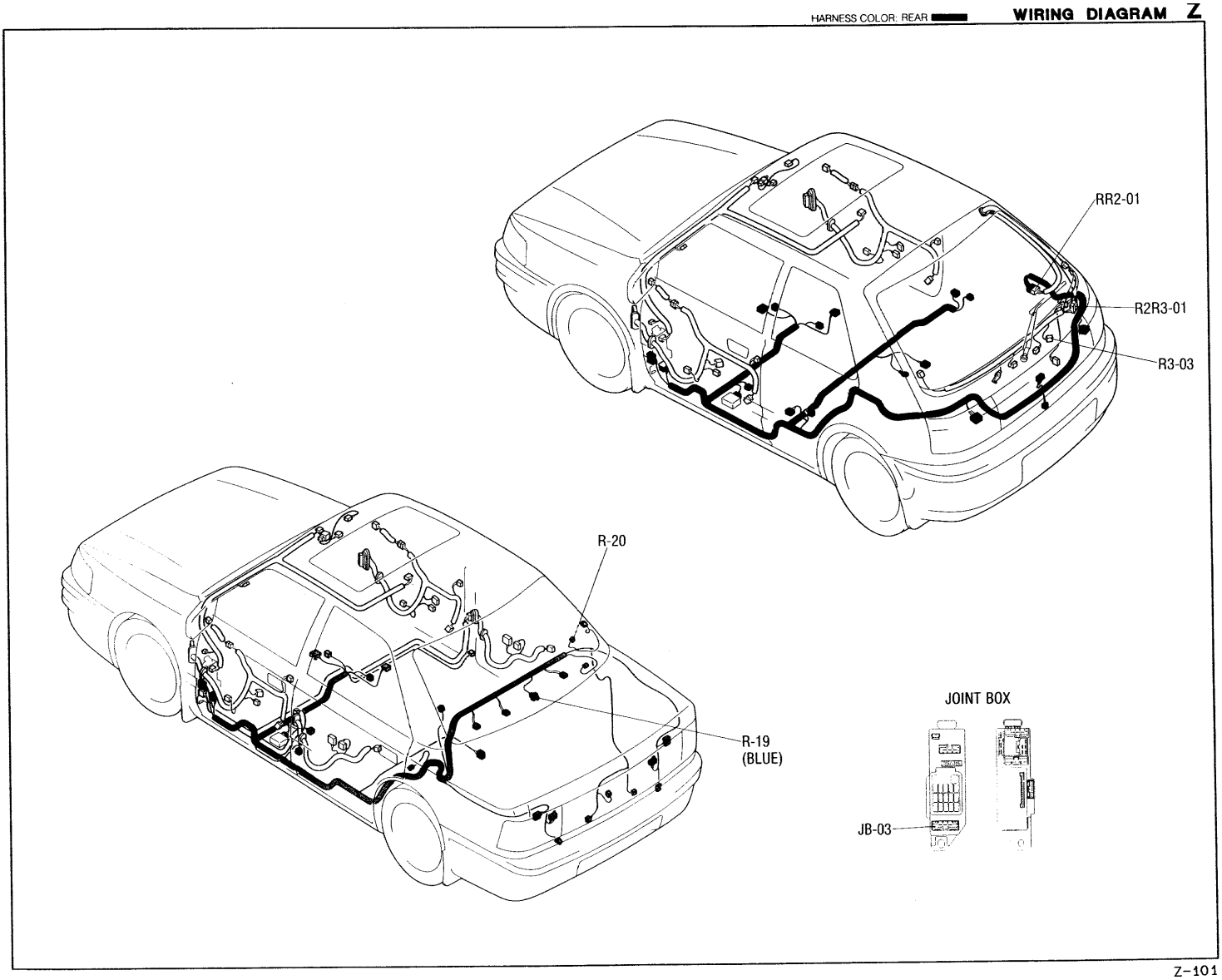

Downloaded from www.Manualslib.com manuals search engine

Z WIRING DIAGRAM

- DIGITAL CLOCK
- CIGARETTE LIGHTER
- REAR WINDOW DEFROSTER

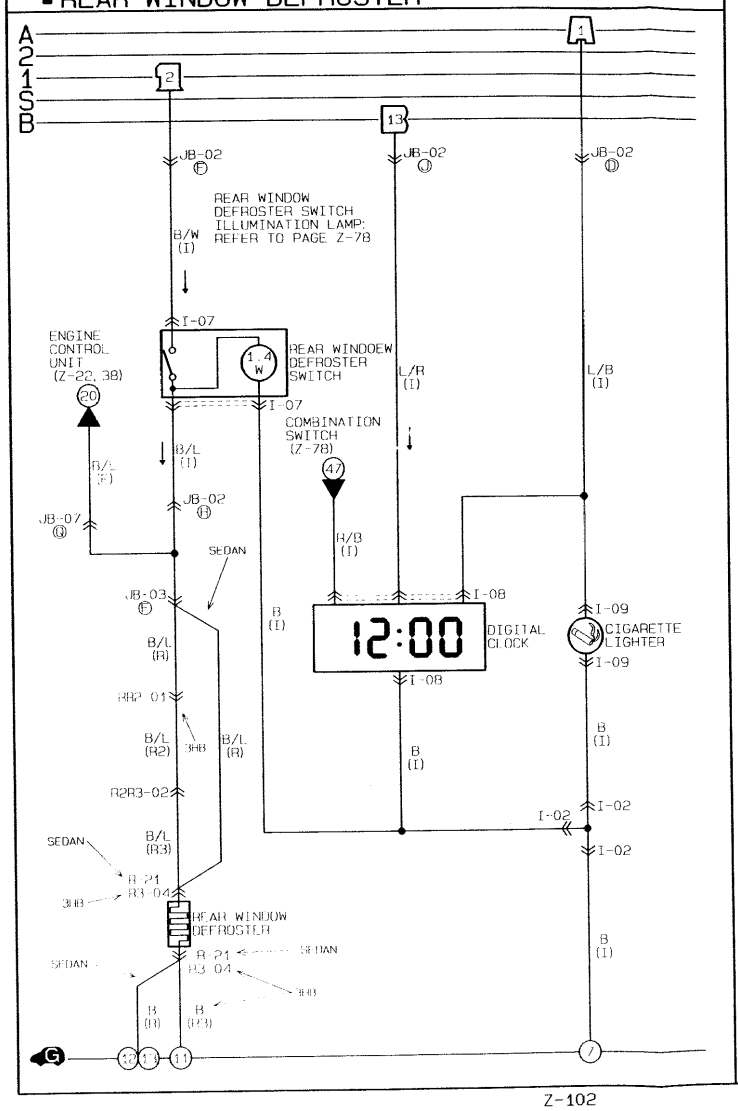

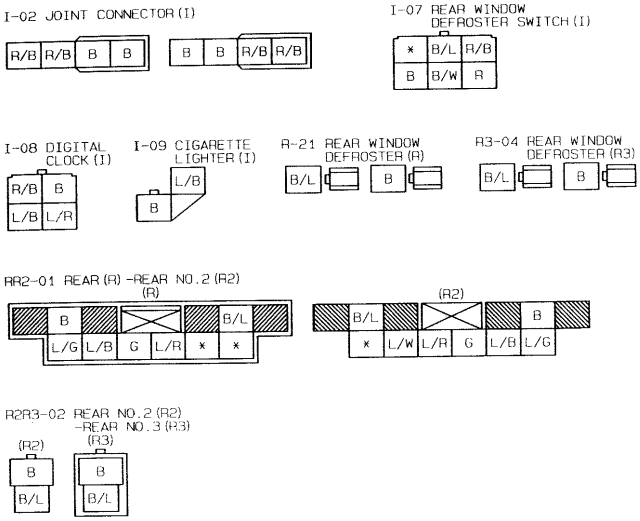

Downloaded from www.Manualslib.com manuals search engine

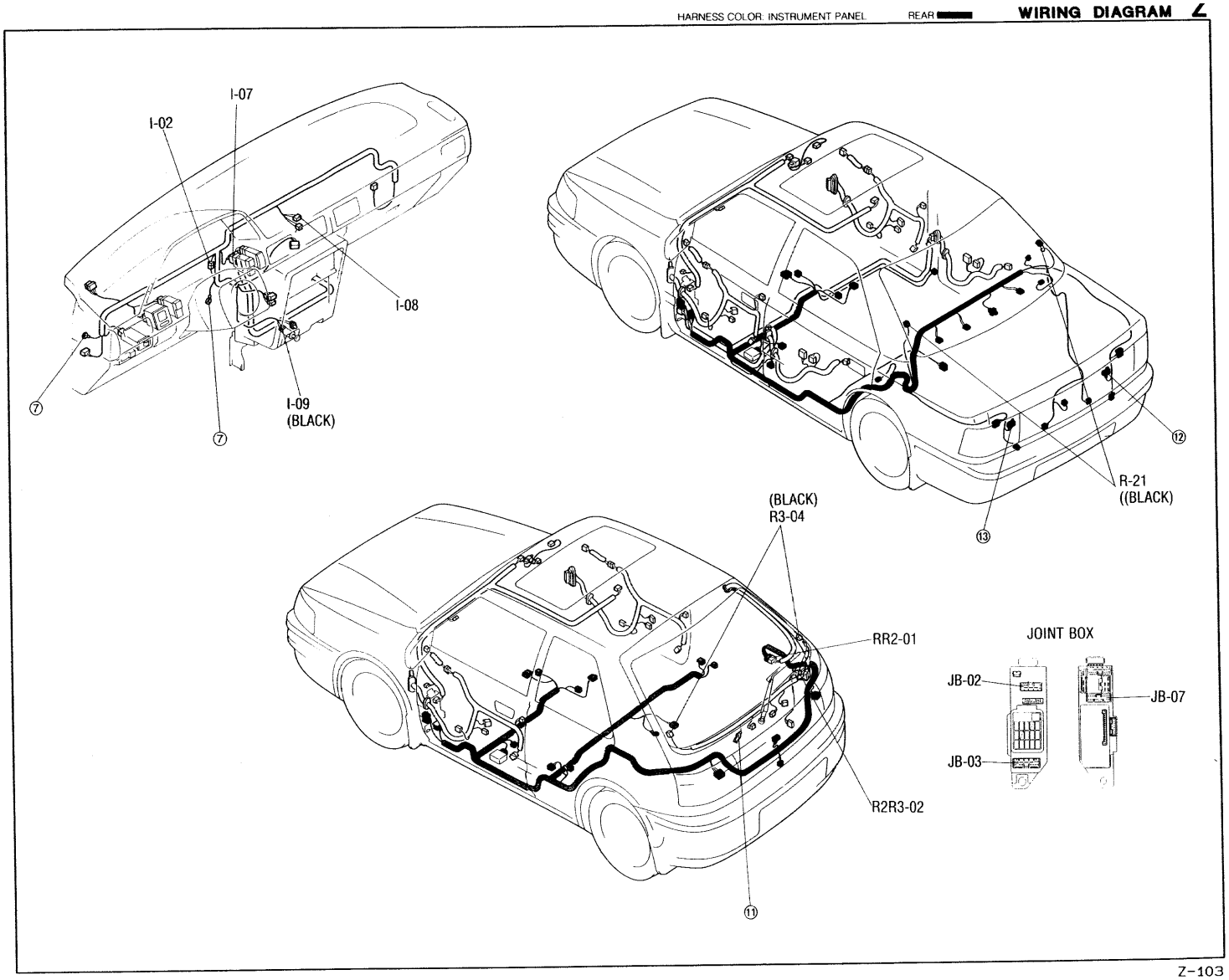

Downloaded from www.Manualslib.com manuals search engine

■ POWER DOOR LOCK

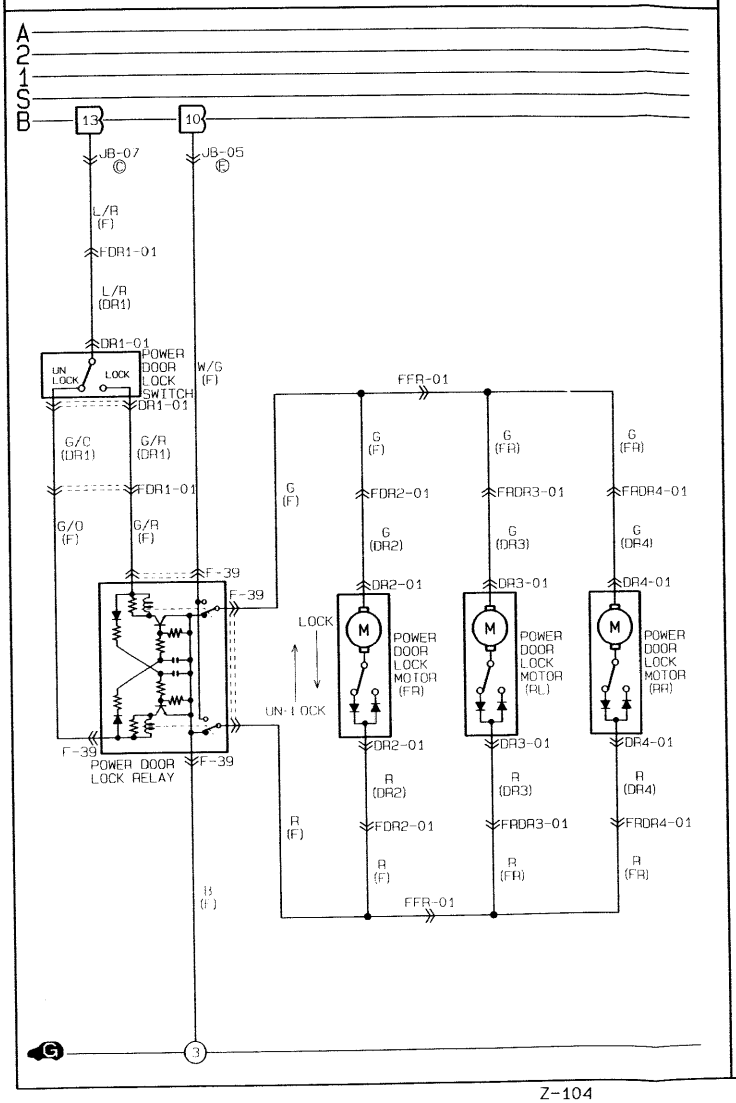

F-39 POWER DOOR LOCK RELAY (F)

*	G	G/O	B
*	R	G/R	W/G

DR1-01 POWER DOOR LOCK SWITCH (DR1)

L/R	
G/O	G/R

DR2-01 POWER DOOR LOCK MOTOR (FR) (DR2)

R
G

DR3-01 POWER DOOR LOCK MOTOR (RL) (DR3)

R
G

DR4-01 POWER DOOR LOCK MOTOR (RR) (DR4)

R
G

FDR1-01 FRONT (F) -DOOR NO.1 (DR1)

(F)

B/L		B				B/W		
★L/Y *	G/Y	Y/W	R/W	L/R	L/O	LG	BR/Y	*
★B *	W/R	L/W	G/W	BR	V	G/O	*	G/R

(DR1)

B/W				B		B/L		
*	BR/Y	LG	L/O	L/R	R/W	[Y/W] *	[G/Y] *	L/Y
G/R	*	G/O	V	BR	G/W	[L/W] *	[W/R] *	B

★...WITH PASSIVE SHOULDER BELT [ ]...SEDAN

FDR2-01 FRONT (F) -DOOR NO.2 (DR2)

(F)

B/L			G			R		
★L/O *	*	*	R/W	*	W	LG/B	BR/B	*
★B *	*	*	G/W	BR	L/W	*	*	*

(DR2)

R				G		B/L		
*	BR/B	G/B	W	*	R/W	*	*	L/O
*	*	*	L/W	BR	G/W	*	*	B

★...WITH PASSIVE SHOULDER BELT

FFR-01 FRONT (F) -FLOOR (FR)

(F)

L/W	Y/W		R
B/L	G/Y	W/R	G

(FR)

R		Y/W	L/W
G	W/R	G/Y	B/L

FRDR3-01 FLOOR (FR) -DOOR NO.3 (DR3)

(FR)

R		B/L
G	W/R	G/Y

(DR3)

B/L		R
L/W	Y/W	G

FRDR4-01 FLOOR (FR) -DOOR NO.4 (DR4)

(FR)

R		B/L
G	Y/W	L/W

(DR4)

B/L		R
L/W	Y/W	G

Downloaded from www.Manualslib.com manuals search engine

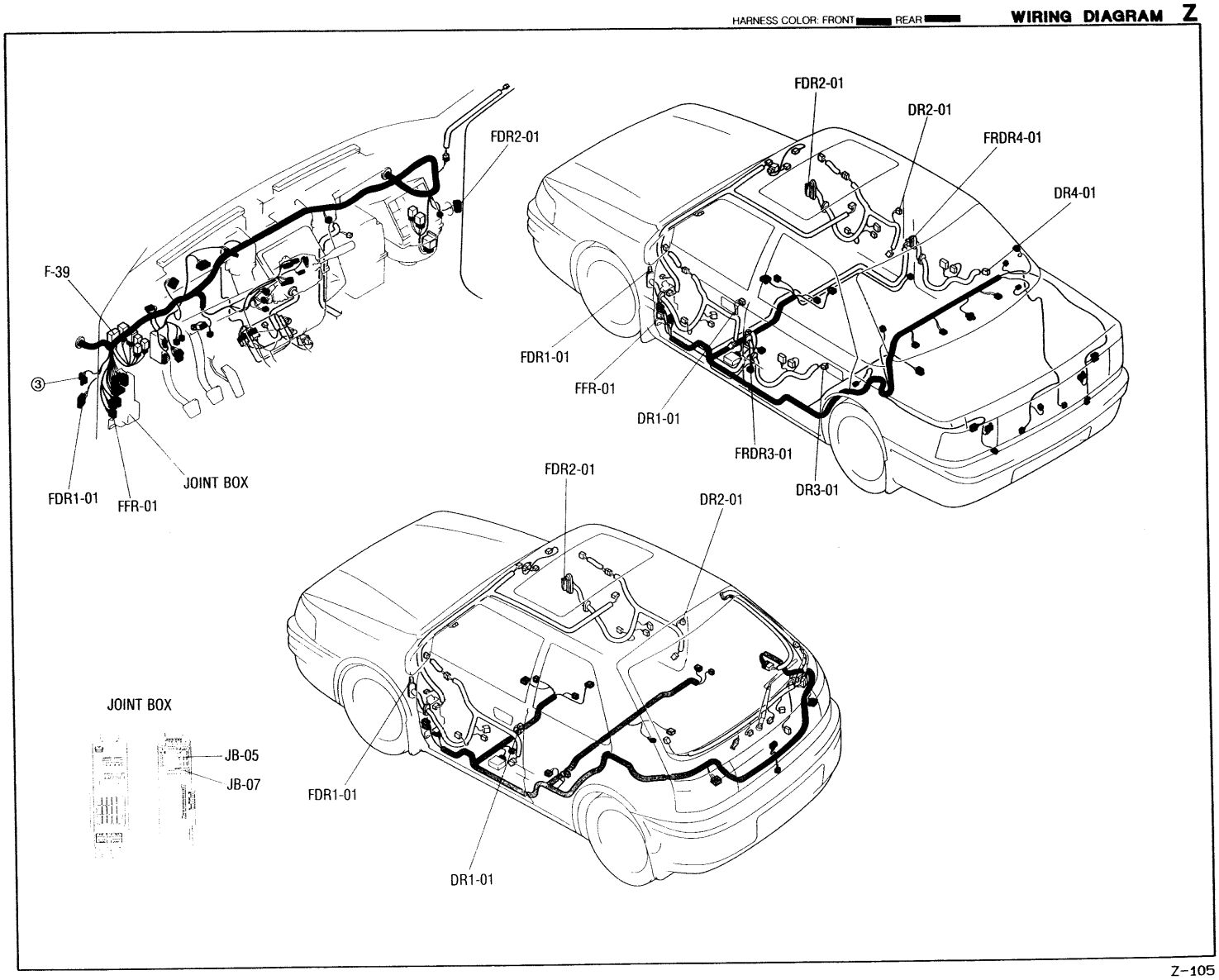

Downloaded from www.Manualslib.com manuals search engine

■ REMOTE CONTROL MIRROR

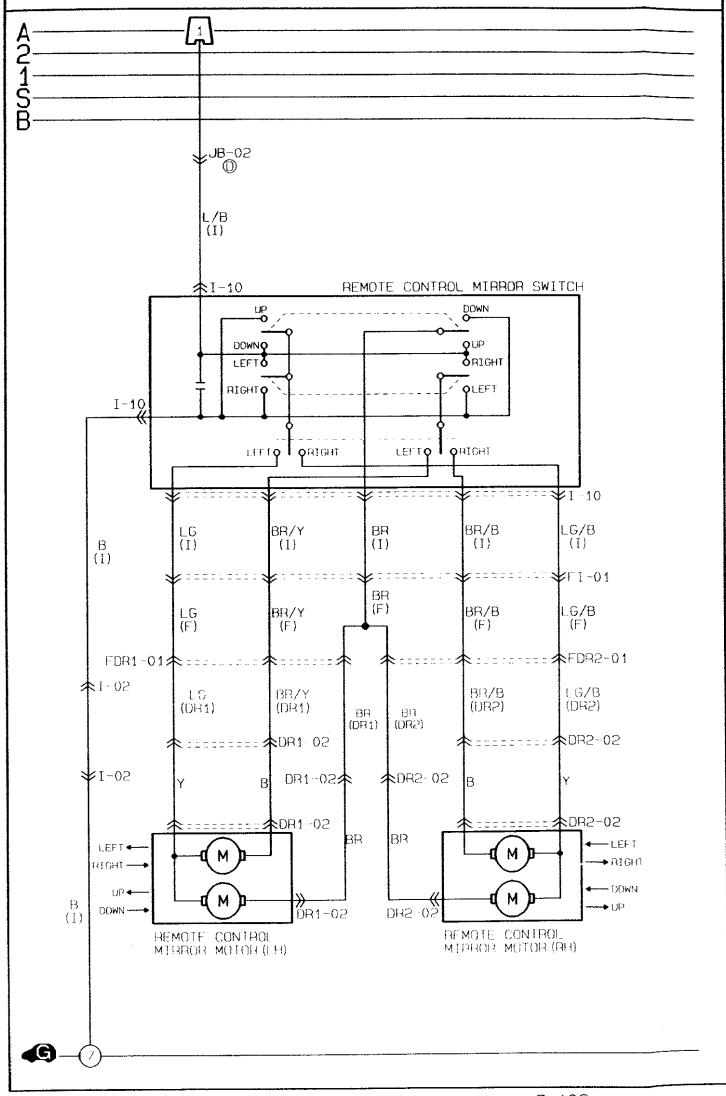

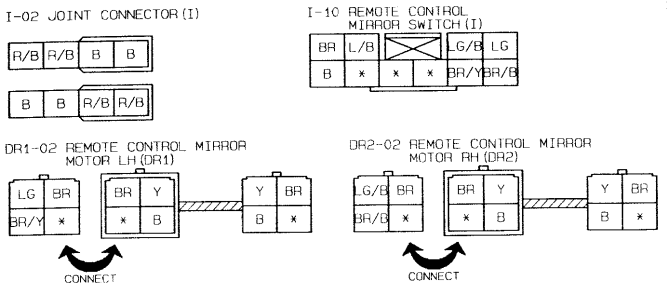

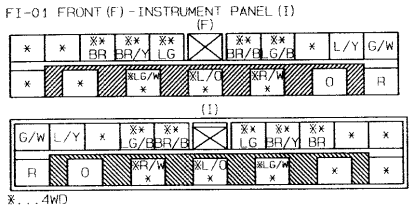

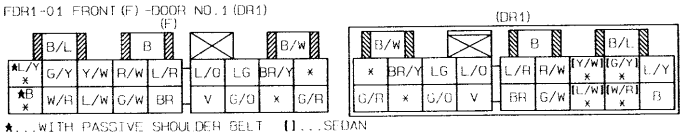

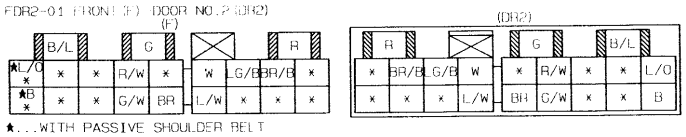

Downloaded from www.Manualslib.com manuals search engine

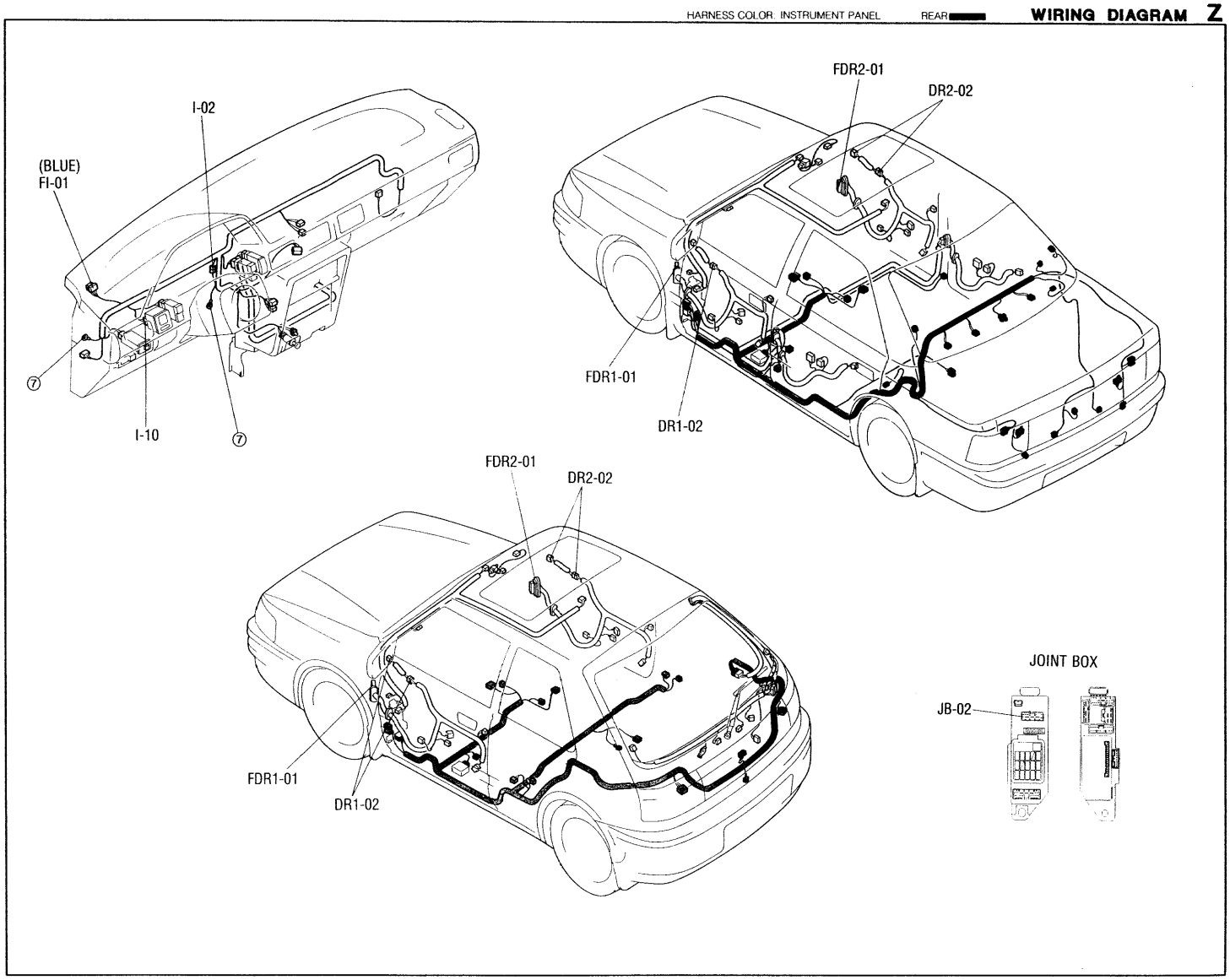

Downloaded from www.Manualslib.com manuals search engine

■ POWER WINDOW

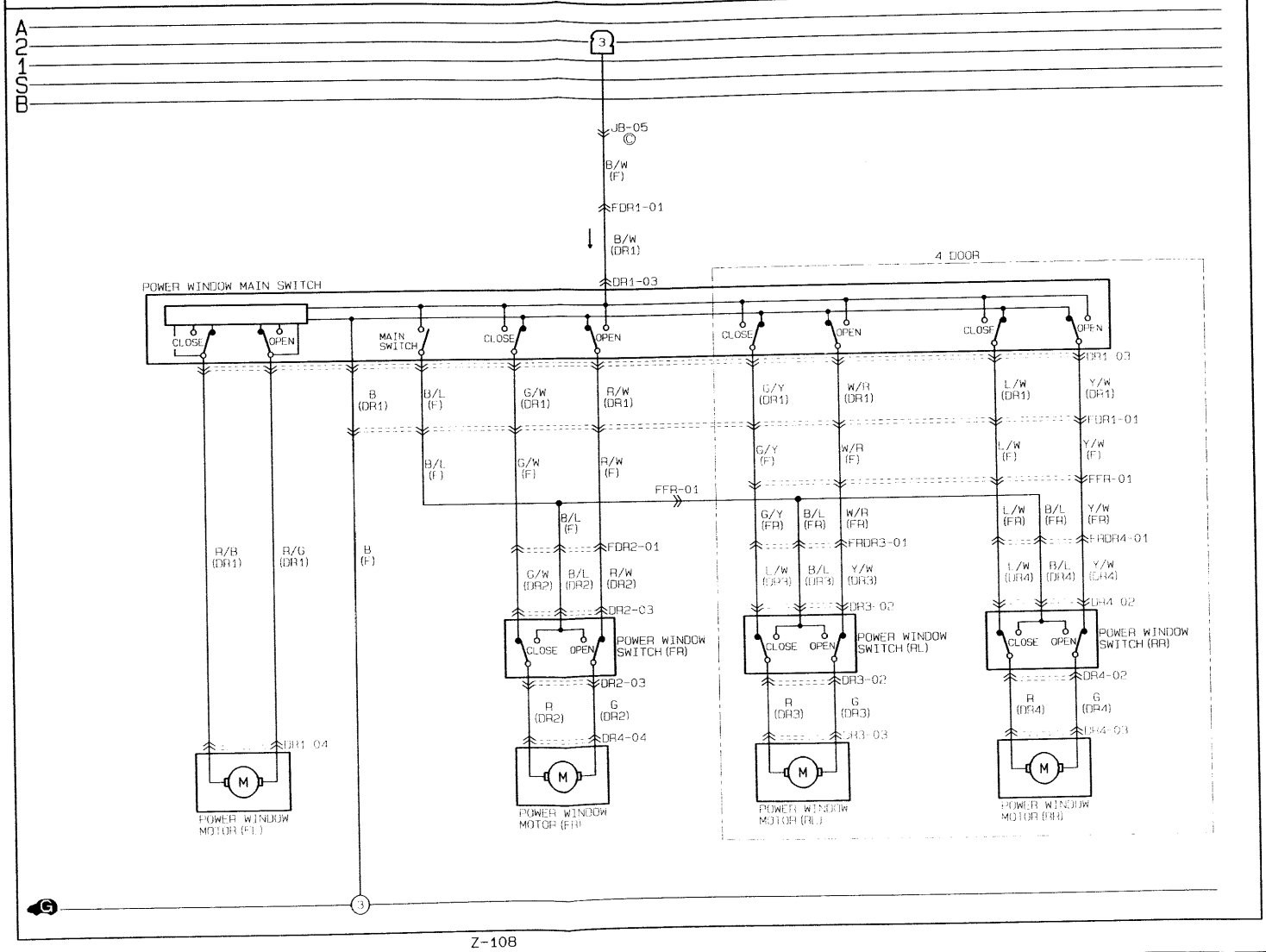

Downloaded from www.Manualslib.com manuals search engine

DR1-03 POWER WINDOW MAIN SWITCH (DR1)

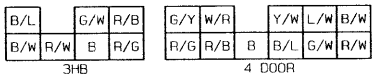

DR1-04 POWER WINDOW MOTOR FL (DR1)

DR2-03 POWER WINDOW SWITCH FR (DR2)

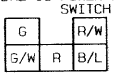

DR2-04 POWER WINDOW MOTOR FR (DR2)

DR3-02 POWER WINDOW SWITCH RL (DR3)

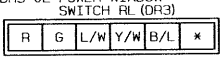

DR3-03 POWER WINDOW MOTOR RL (DR3)

DR4-02 POWER WINDOW SWITCH RR (DR4)

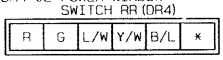

DR4-03 POWER WINDOW MOTOR RR (DR4)

FDR1-01 FRONT (F) -DOOR NO. 1 (DR1)

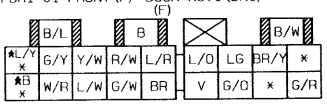

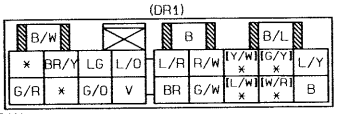

★...WITH PASSIVE SHOULDER BELT [ ]...SEDAN

FDR2-01 FRONT (F) -DOOR NO. 2 (DR2)

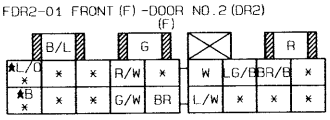

★...WITH PASSIVE SHOULDER BELT

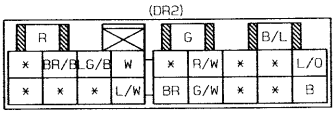

FFR-01 FRONT (F) -FLOOR (FR)

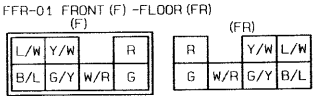

FRDR3-01 FLOOR (FR) -DOOR NO. 3 (DR3)

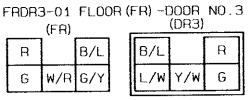

FRDR4-01 FLOOR (FR) -DOOR NO. 4 (DR4)

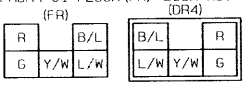

Downloaded from www.Manualslib.com manuals search engine

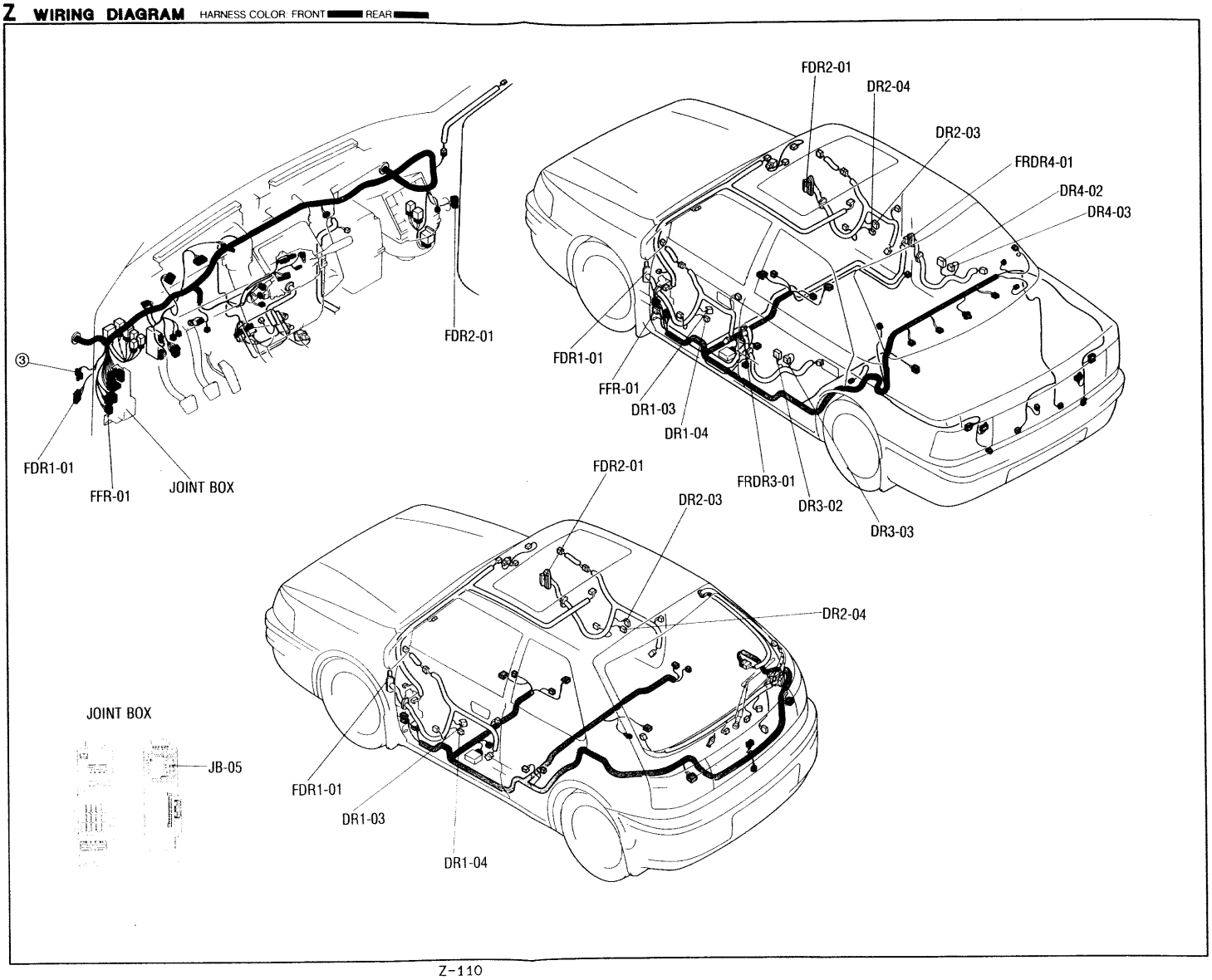

Downloaded from www.Manualslib.com manuals search engine

Downloaded from www.Manualslib.com manuals search engine

■ PASSIVE SHOULDER BELT CONTROL SYSTEM

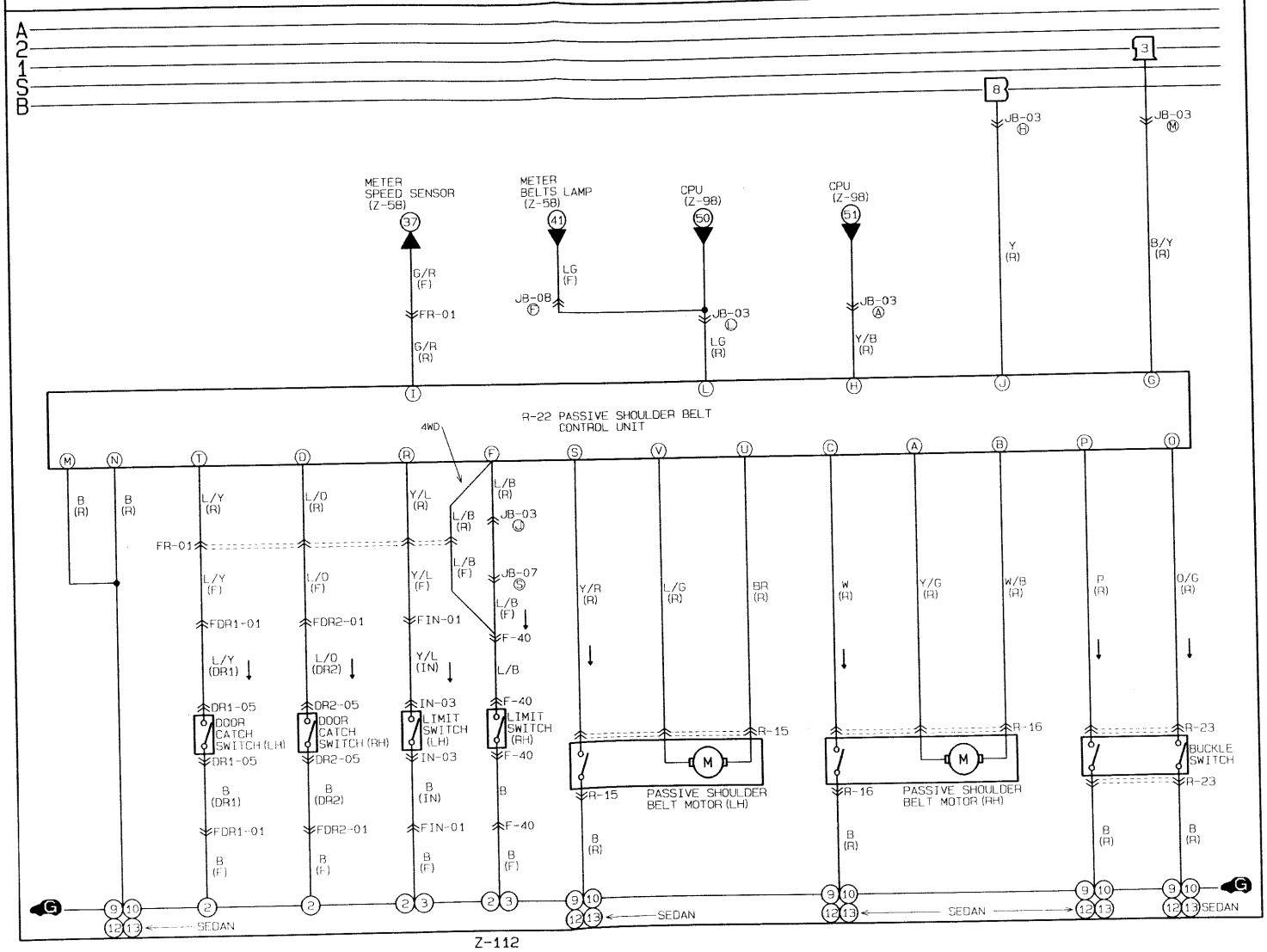

Downloaded from www.Manualslib.com manuals search engine

F-40 LIMIT SWITCH RH (F)

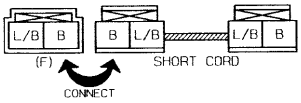

R-15 PASSIVE SHOULDER BELT MOTOR LH (R)

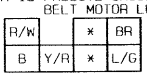

R-16 PASSIVE SHOULDER BELT MOTOR RH (R)

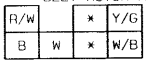

R-22 PASSIVE SHOULDER BELT CONTROL UNIT (R)

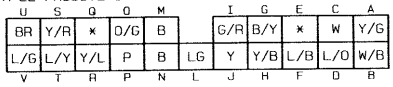

R-23 BUCKLE SWITCH (R)

DR1-05 DOOR CATCH SWITCH LH (DR1)

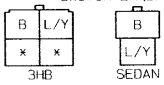

DR2-05 DOOR CATCH SWITCH RH (DR2)

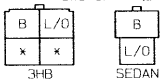

IN-03 LIMIT SWITCH LH (IN)

FR-01 FRONT (F) -REAR (R)

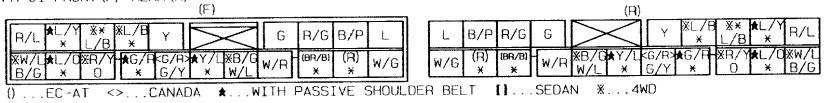

() ...EC-AT <>...CANADA ★...WITH PASSIVE SHOULDER BELT [] ...SEDAN ※...4WD

FDR1-01 FRONT (F) -DOOR NO.1 (DR1)

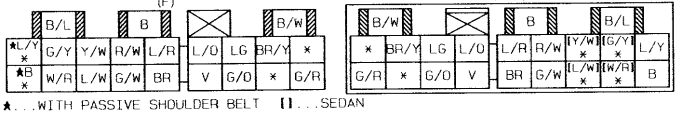

★...WITH PASSIVE SHOULDER BELT [] ...SEDAN

FDR2-01 FRONT (F) -DOOR NO.2 (DR2)

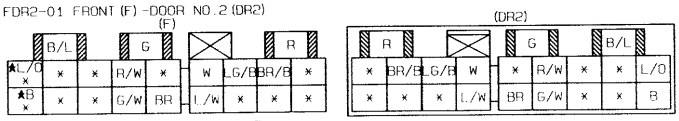

★...WITH PASSIVE SHOULDER BELT

FIN-01 FRONT (F) -INTERIOR LAMP (IN)

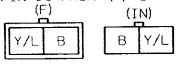

Downloaded from www.Manualslib.com manuals search engine

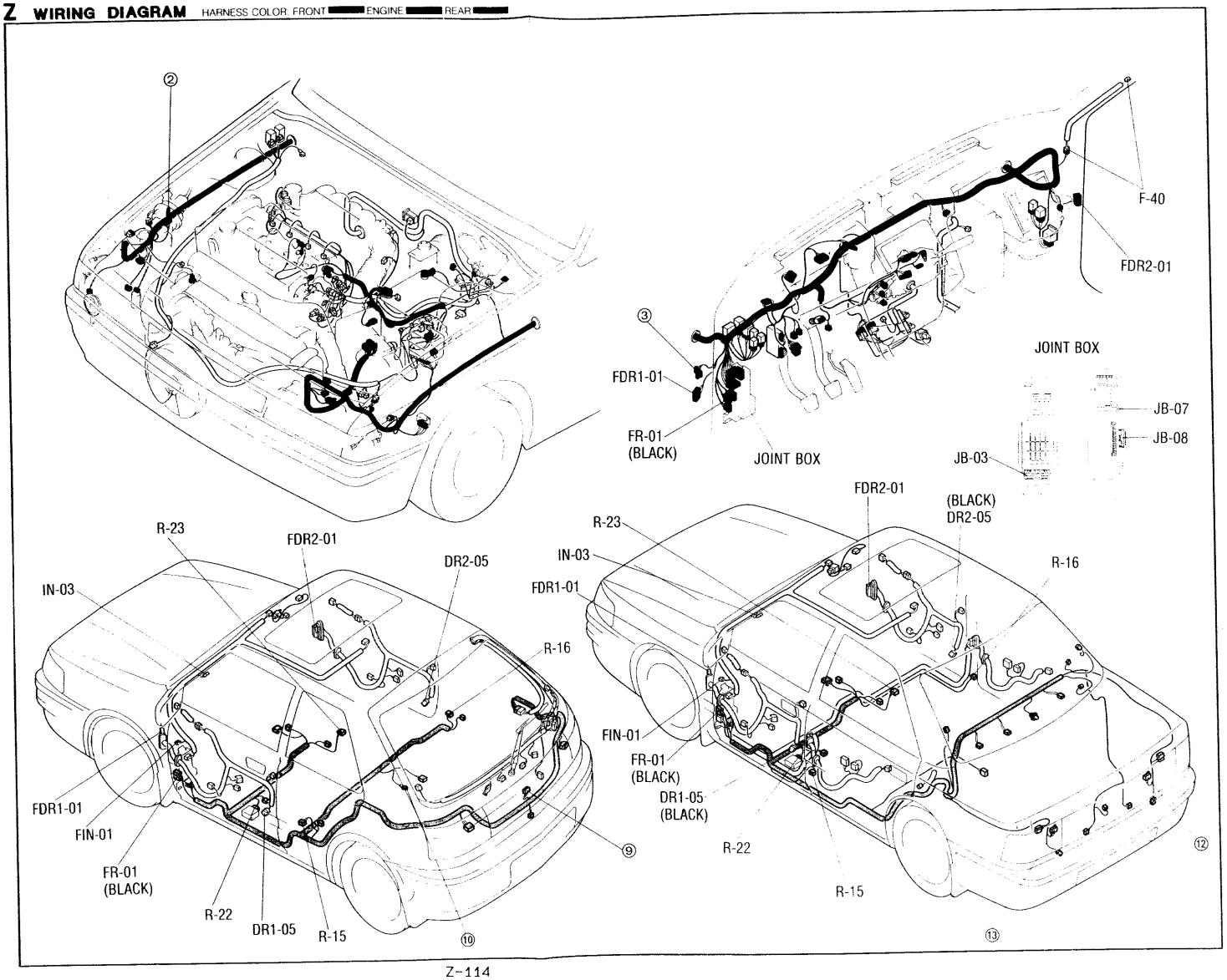

Downloaded from www.Manualslib.com manuals search engine

Downloaded from www.Manualslib.com manuals search engine

■ CRUISE CONTROL SYSTEM

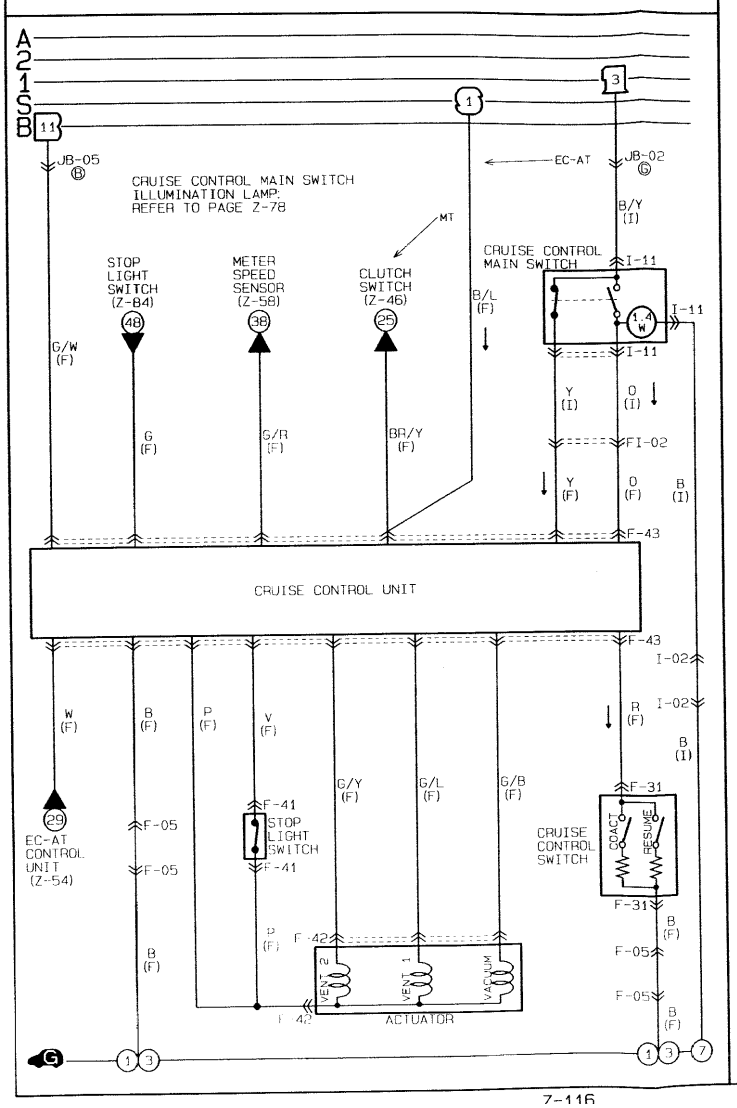

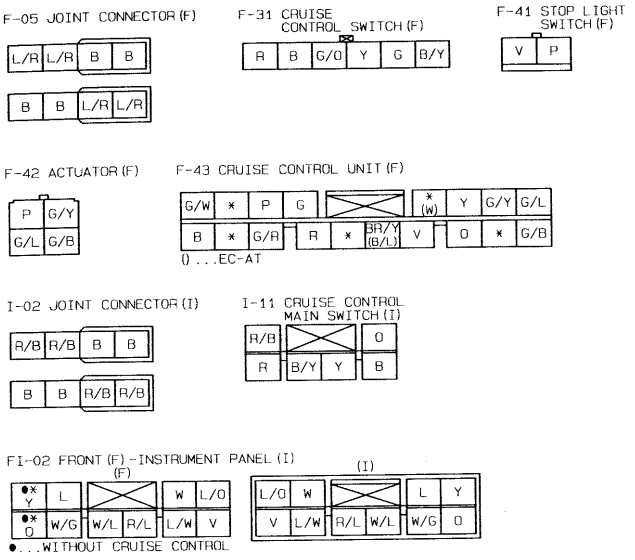

Downloaded from www.Manualslib.com manuals search engine

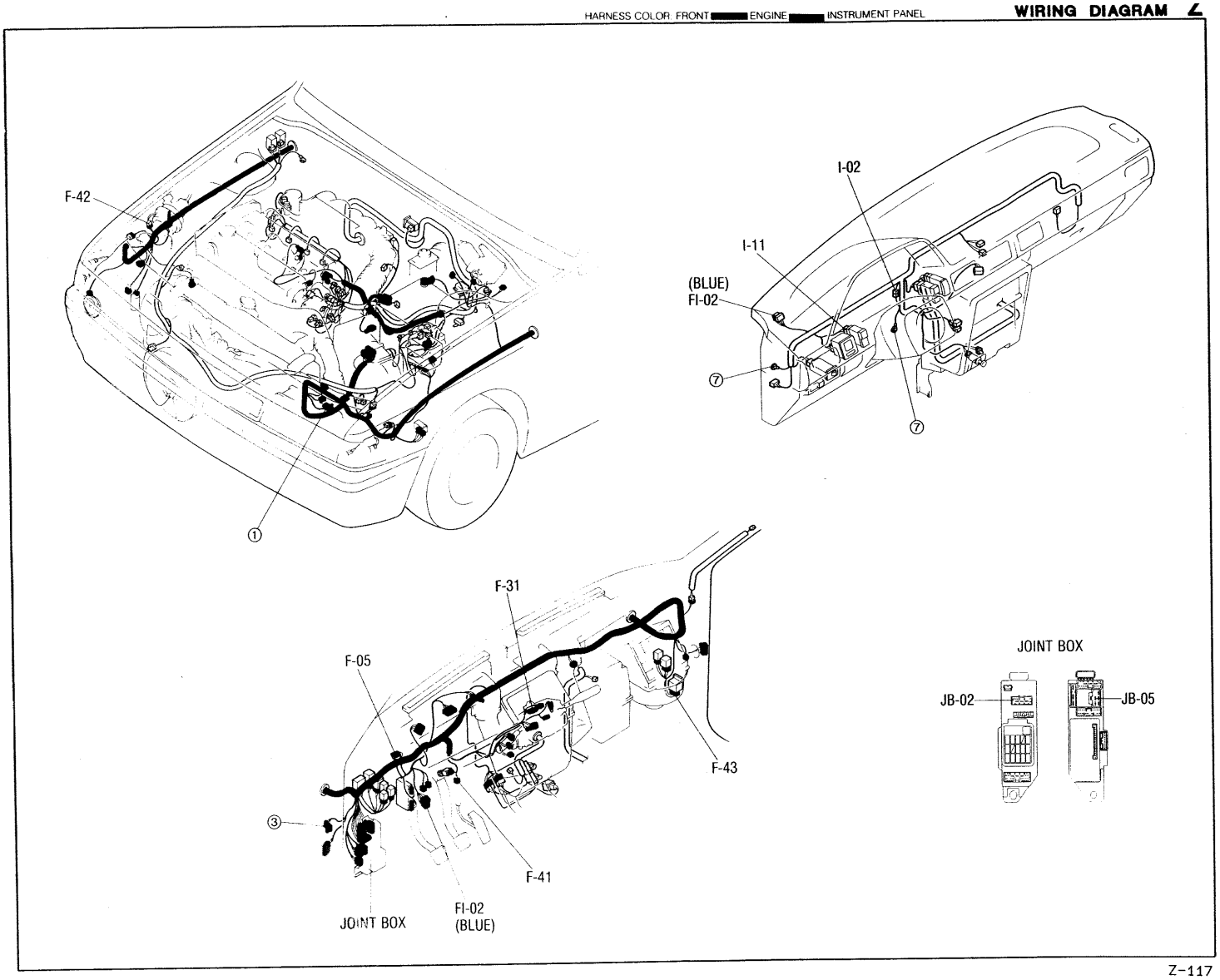

Downloaded from www.Manualslib.com manuals search engine

4WD ■ CENTER DIF-LOCK SYSTEM

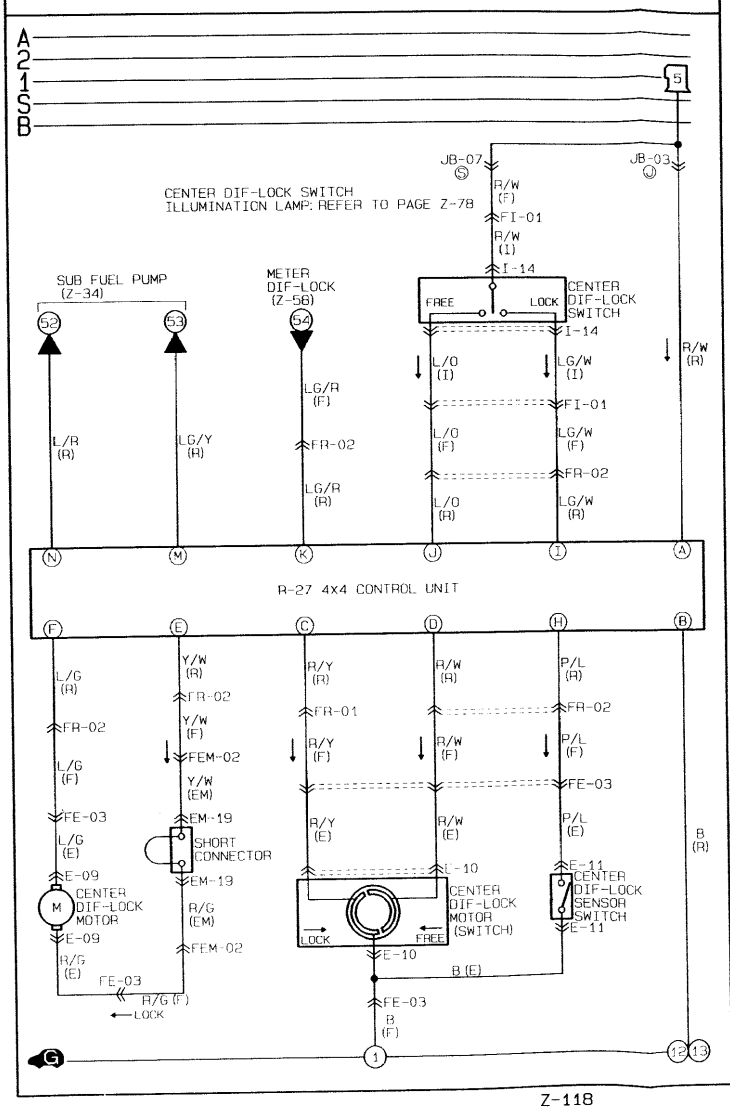

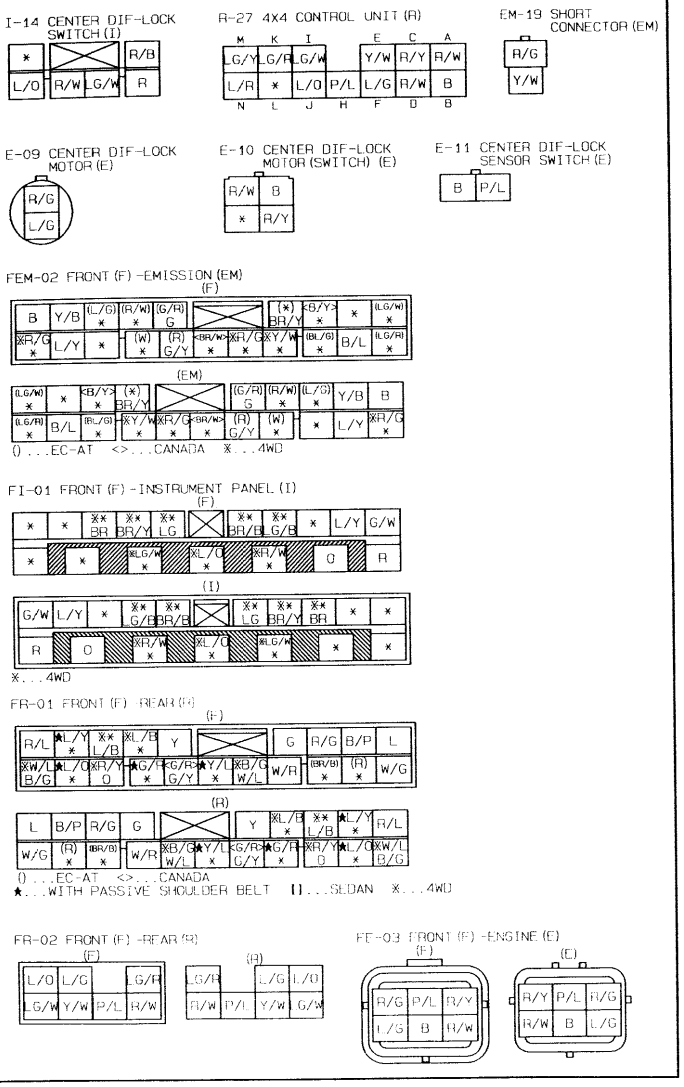

Downloaded from www.Manualslib.com manuals search engine

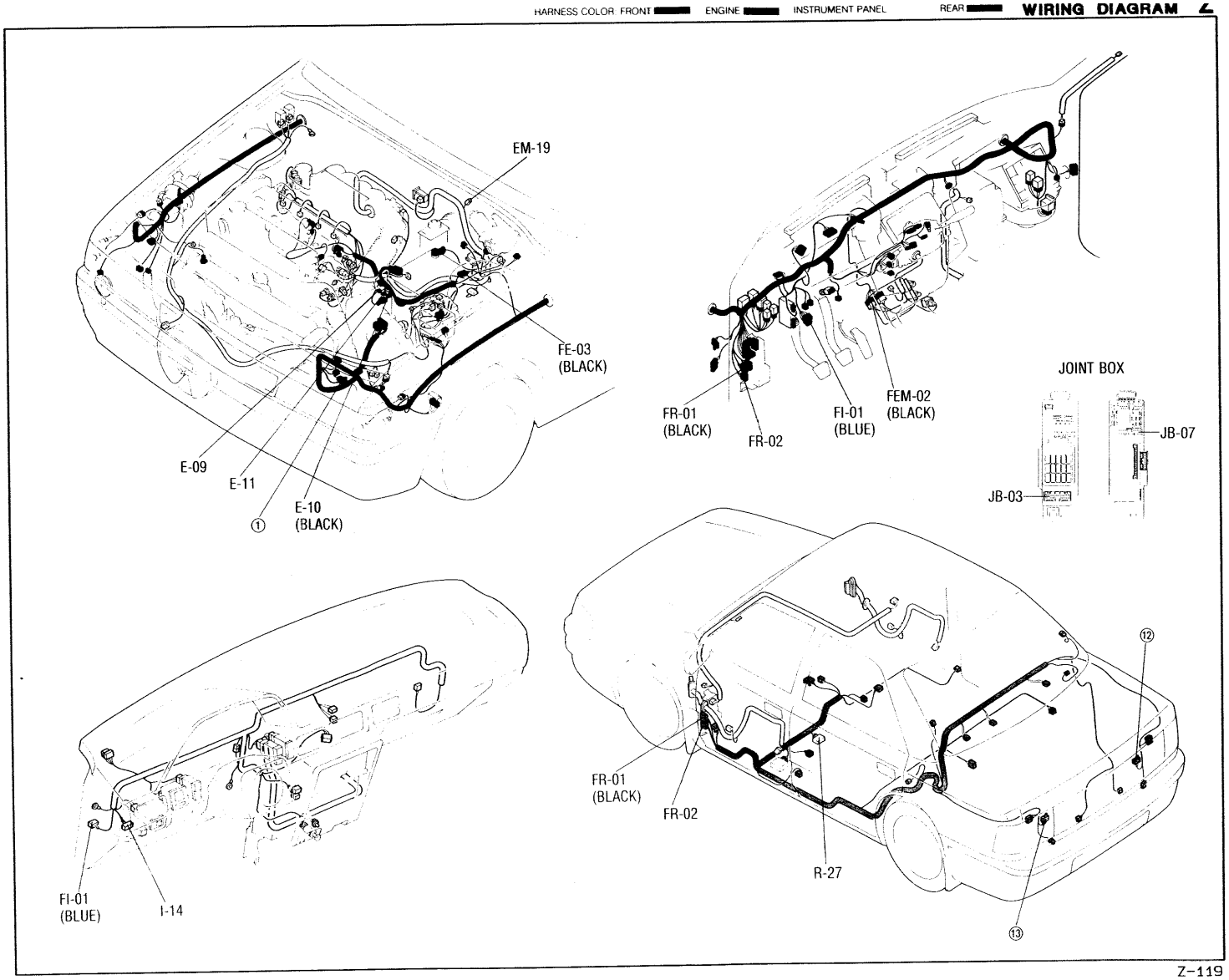

Downloaded from www.Manualslib.com manuals search engine

■ SLIDING SUNROOF

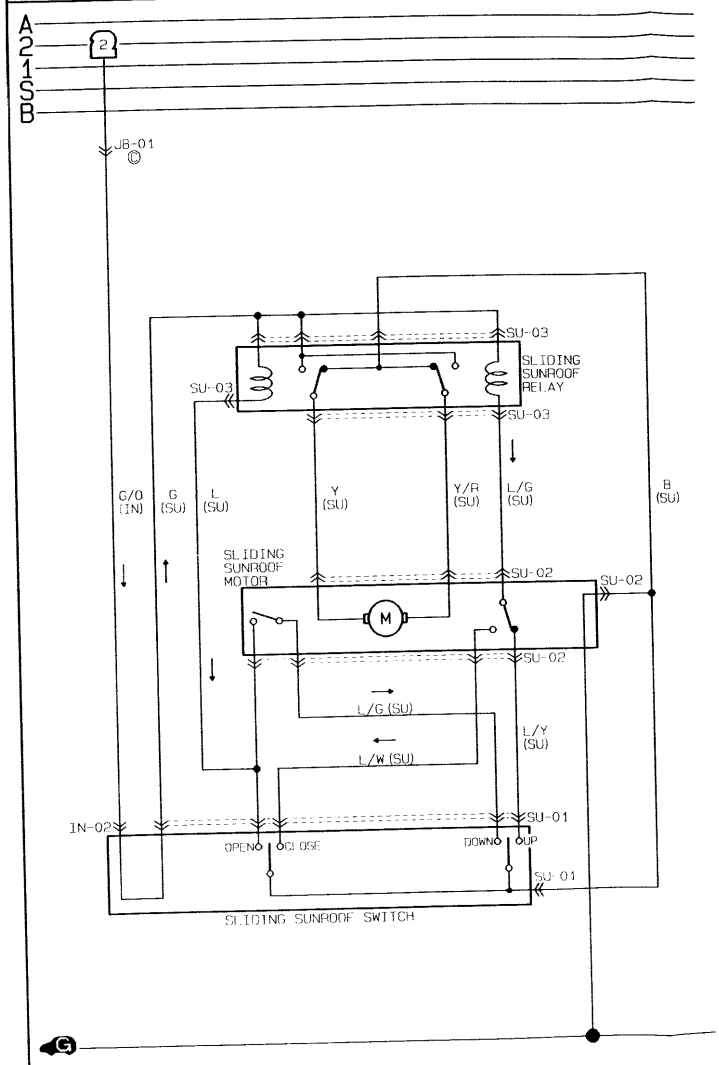

IN-02 SLIDING SUNROOF (IN)

G/O
L/R

SU-01 SLIDING SUNROOF SWITCH (SU)

L/G	L/W	G
B	L	L/Y

SU-02 SLIDING SUNROOF MOTOR (SU)

Y			L/Y	L/G
Y/R	B	L	L/G	L/W

SU-03 SLIDING SUNROOF RELAY (SU)

Y/R			G	Y
L/G	B	G	G	L

Downloaded from www.Manualslib.com manuals search engine

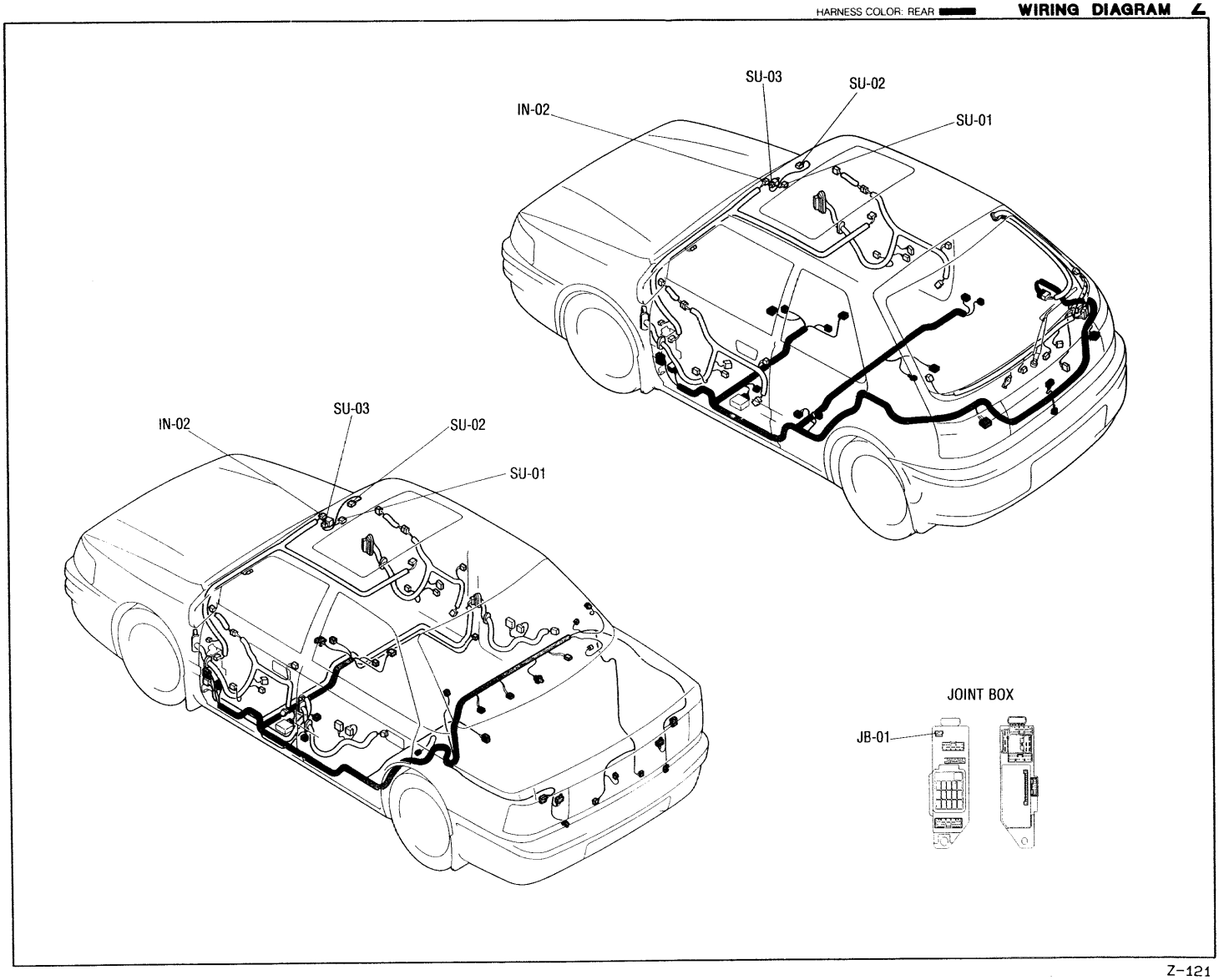

Downloaded from www.Manualslib.com manuals search engine

■ AUDIO

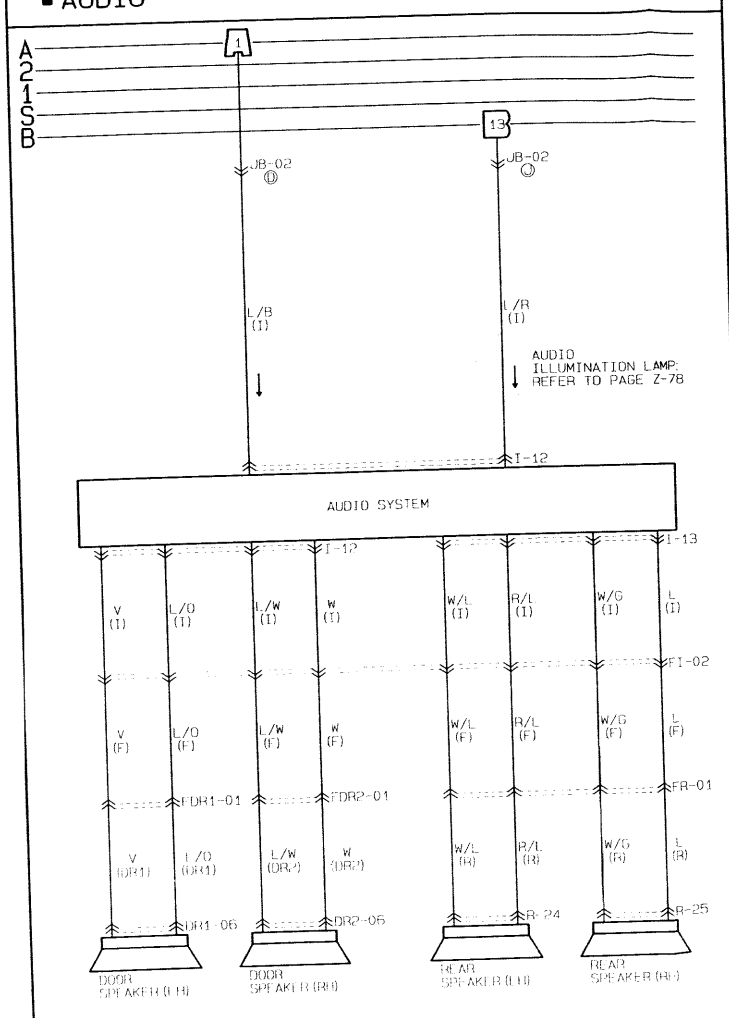

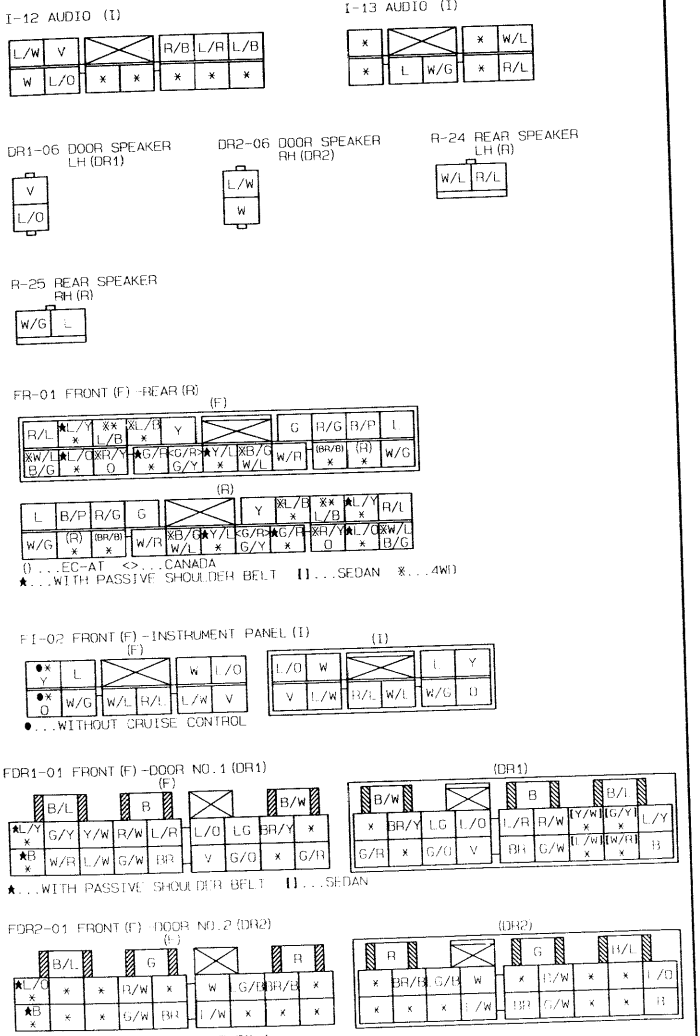

Downloaded from www.Manualslib.com manuals search engine

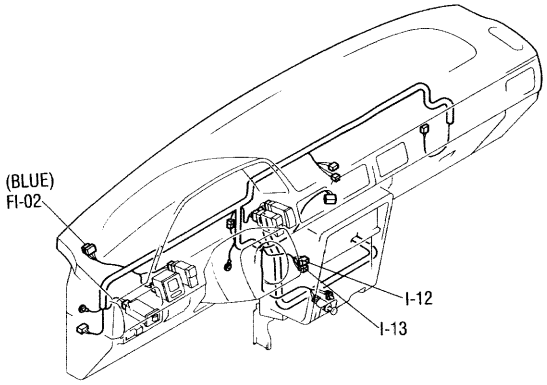

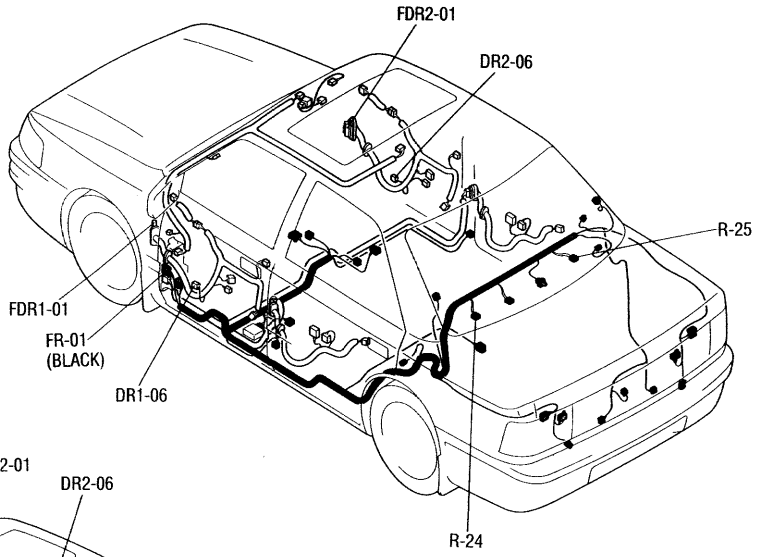

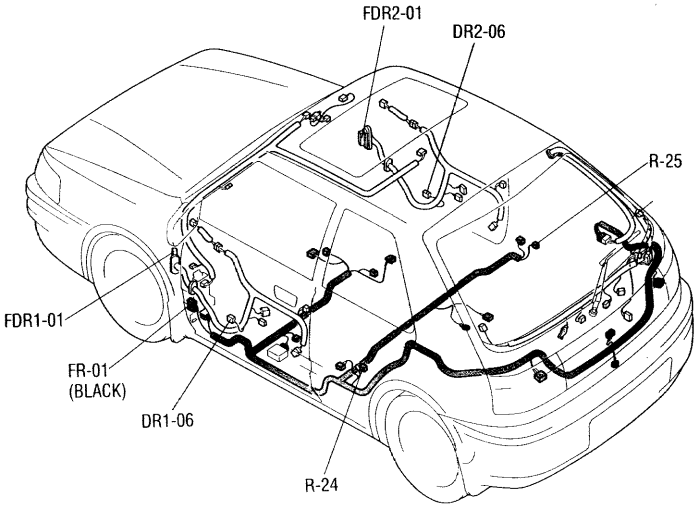

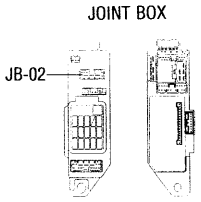

Downloaded from www.Manualslib.com manuals search engine

Z WIRING DIAGRAM

■ INTER CONNECTING DIAGRAM OF JOINT BOX

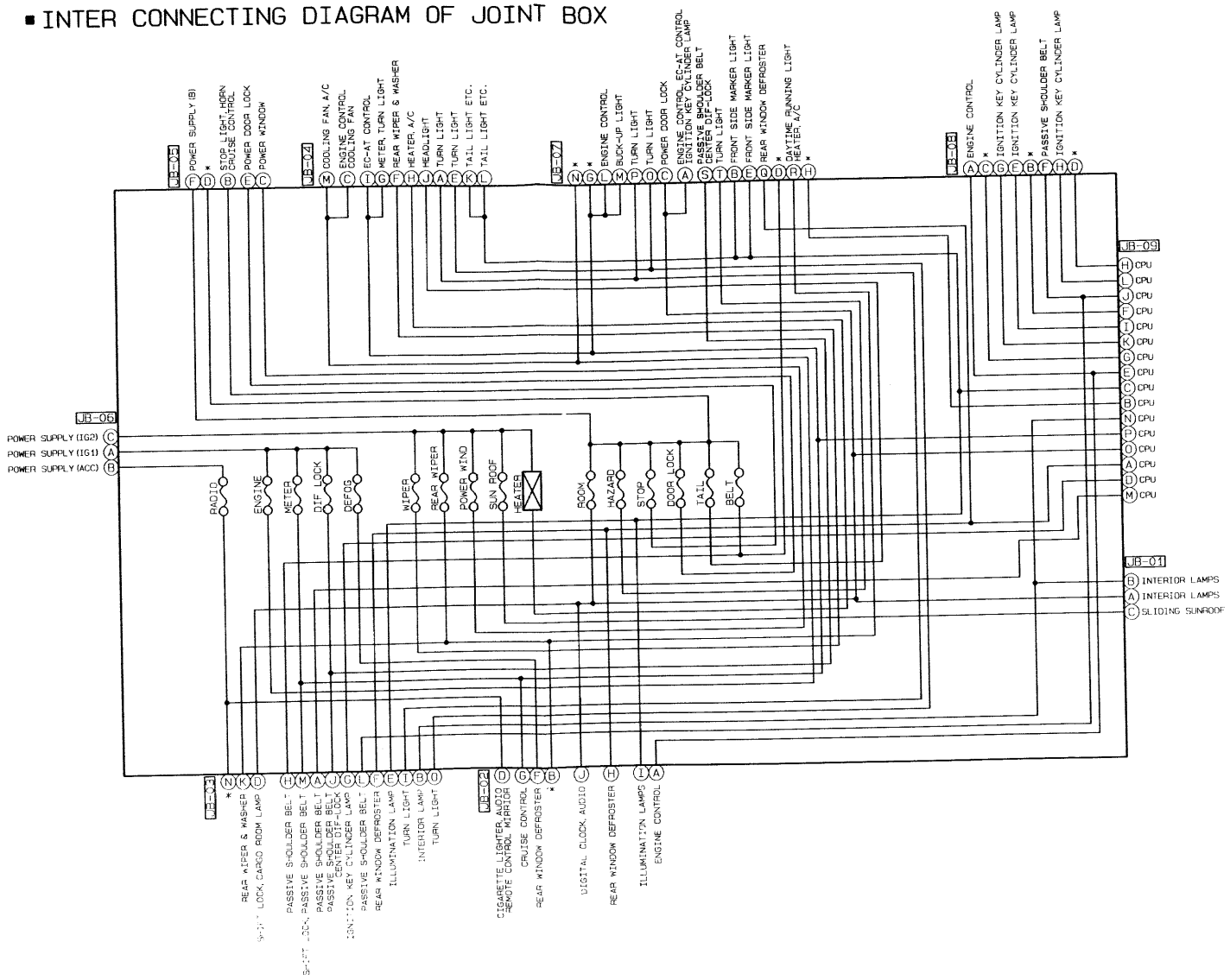

Downloaded from www.Manualslib.com manuals search engine

■ JB CONNECTOR LOCATION

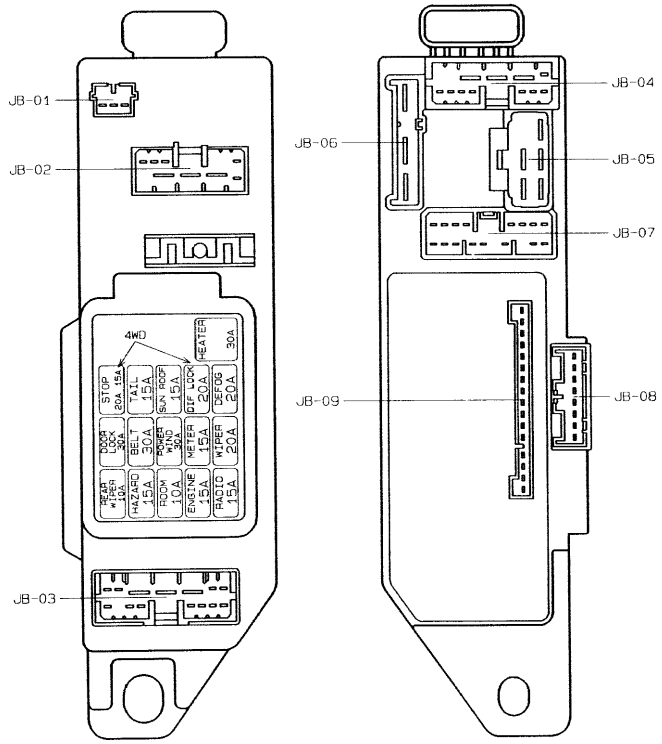

■ JOINT BOX

JB-01 INTERIOR LAMP HARNESS

C	B	A
☆G/O *	R/W	L/R

JB-02 INSTRUMENT PANEL HARNESS

J	I	G		E	C	A
L/R	R/B	B/Y		*	*	O/L

K	H	F	D	B
*	B/L	B/W	L/B	*

JB-03 REAR HARNESS

N	L	K	I		G	E	C	A
*	★LG *	[*] L/G	G/B		L/W	R/B	*	★Y/B *

O	M	J	H	F	D	B
G/W	B/Y	★L/B * ※R/W	★Y *	B/L	L/R	R/W

JB-04 FRONT HARNESS

L	K	I		G	E	C	A
R/B	R/B	(B/Y) *		B/Y	G/W	B/W	G/B

M	J	H	F	D	B
(B/W) *	W/B	L/W	L	*	*

JB-05 FRONT HARNESS

E	C	A
W/G	B/W	*
W/R	*	G/W

F	D	B

JB-06 FRONT HARNESS

C	B	A
B/R	B/W	L

JB-07 FRONT HARNESS

S	Q	O	M		G	E	C	A
※R/W <*> L/B	B/L	G/W	B/Y		*	R/B	L/R	L/R

T	R	P	N	L	J	H	F	D	B
B/R	L/G	G/B	*	<B/Y> *	*	*	*	*	R/B

JB-08 FRONT HARNESS

H	G	F	E	D	C	B	A
V	B	LG	W	*	*	*	O/L

JB-09 CPU

P	O	N	M	L	K	J	I	H	G	F	E	D	C	B	A

☆...WITH SUNROOF ★...WITH PASSIVE SHOULDER BELT
()...EC-AT <>...CANADA []...SEDAN ※...4WD

Downloaded from www.Manualslib.com manuals search engine

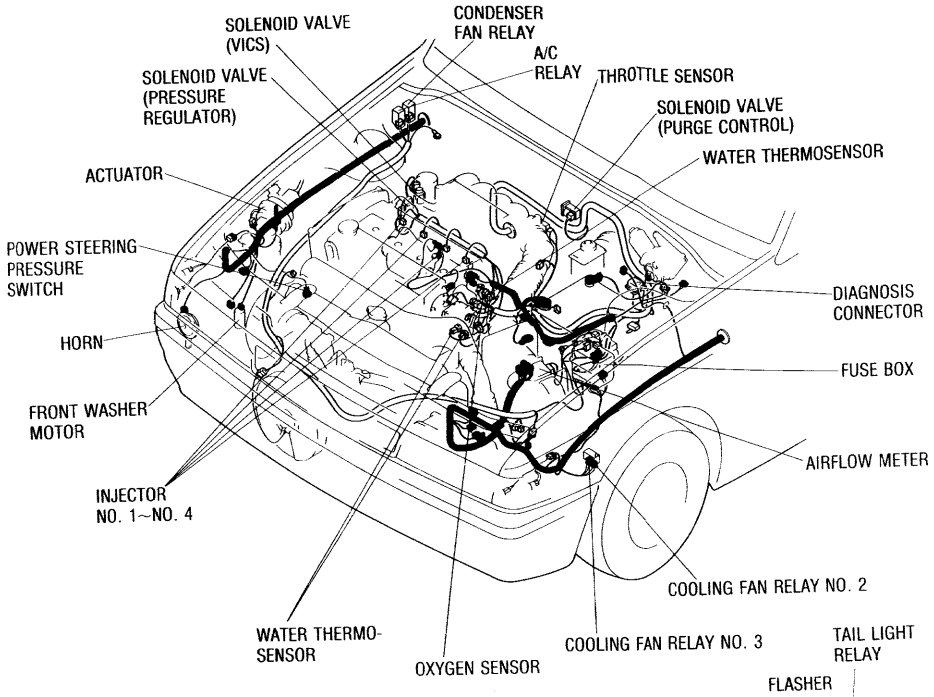

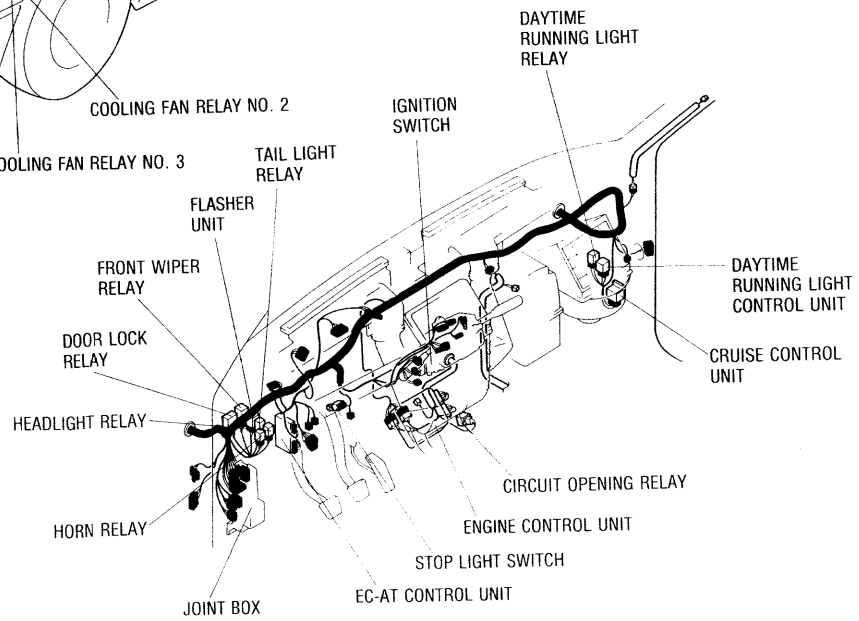

Downloaded from www.Manualslib.com manuals search engine

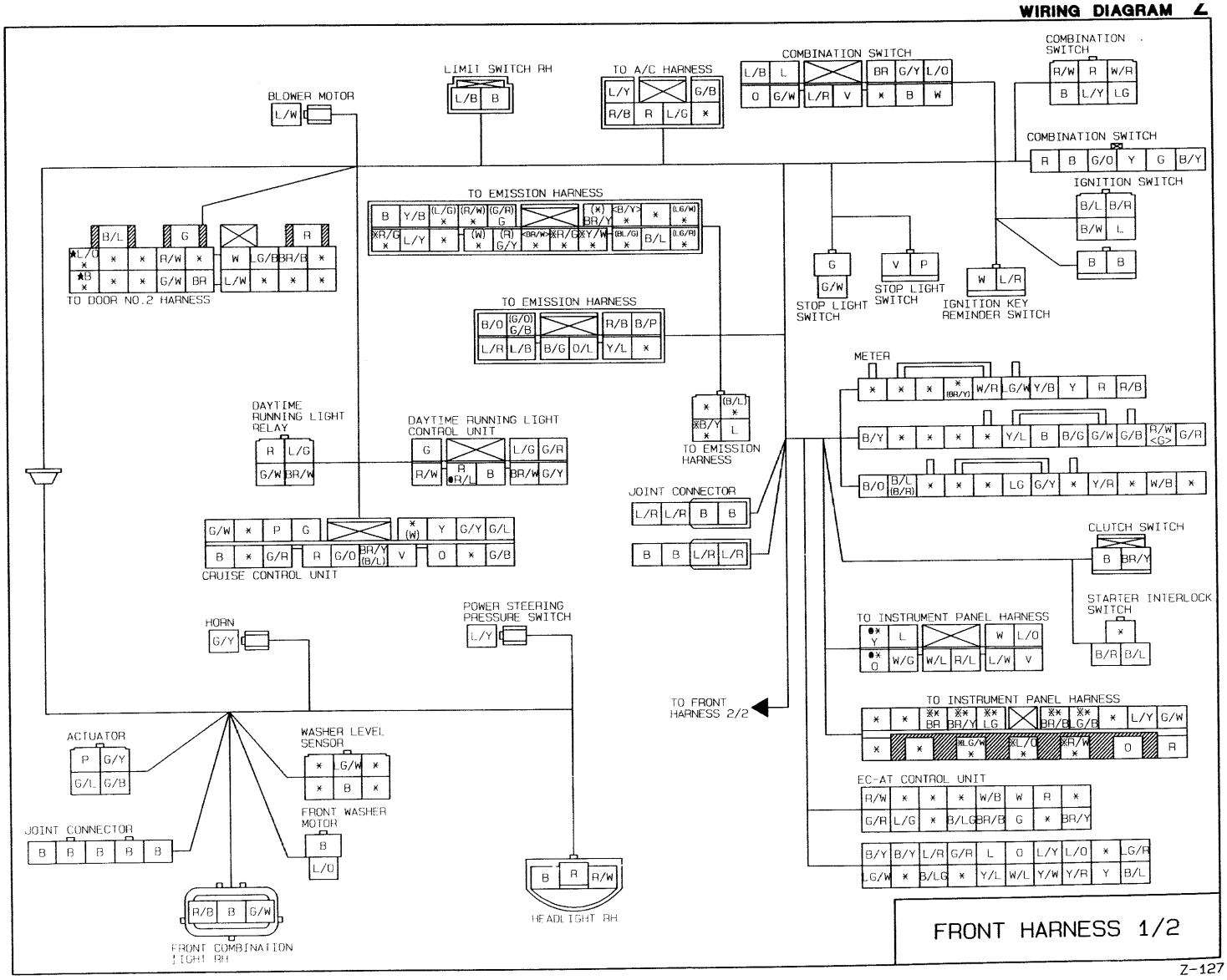

Downloaded from www.Manualslib.com manuals search engine

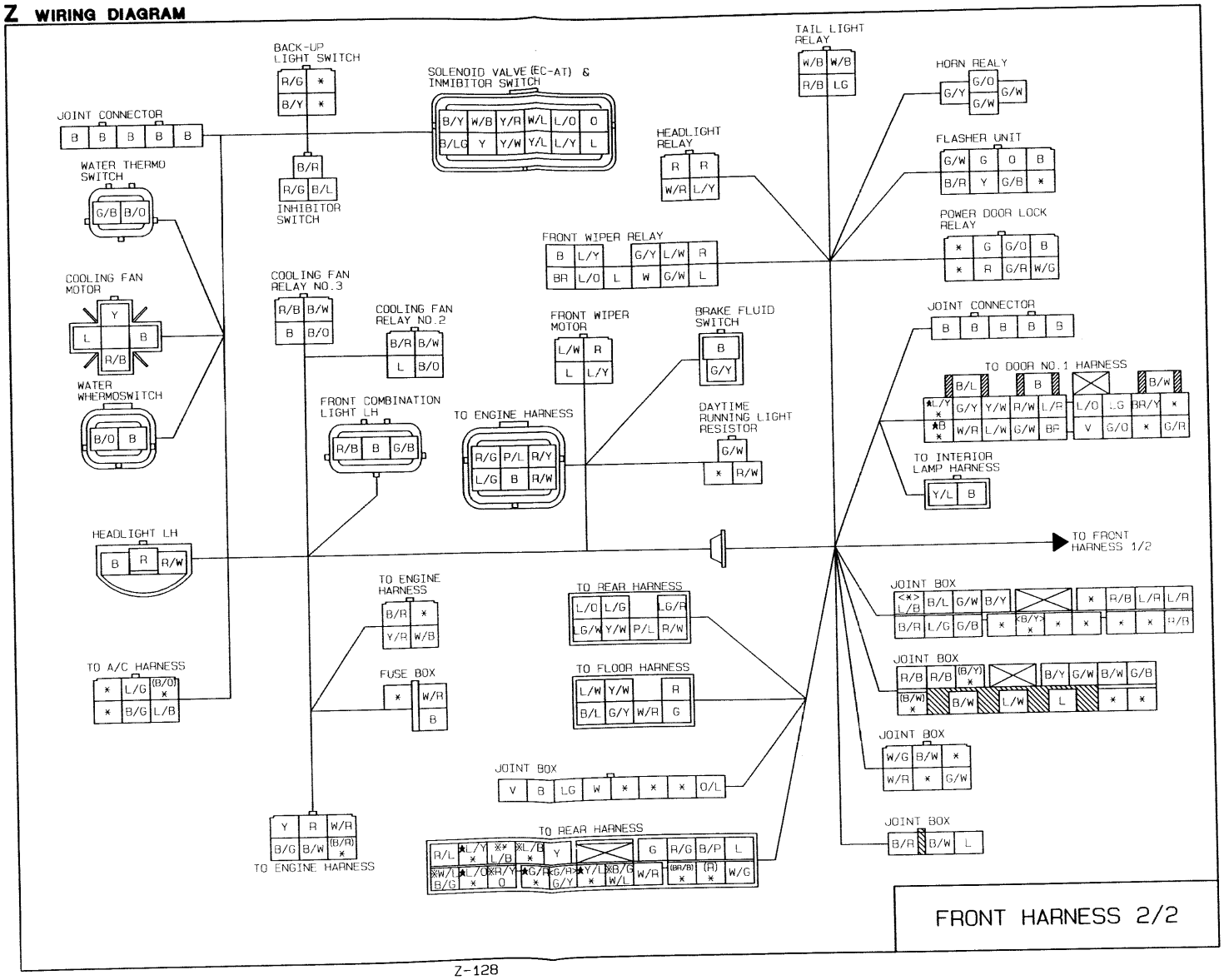

Downloaded from www.Manualslib.com manuals search engine

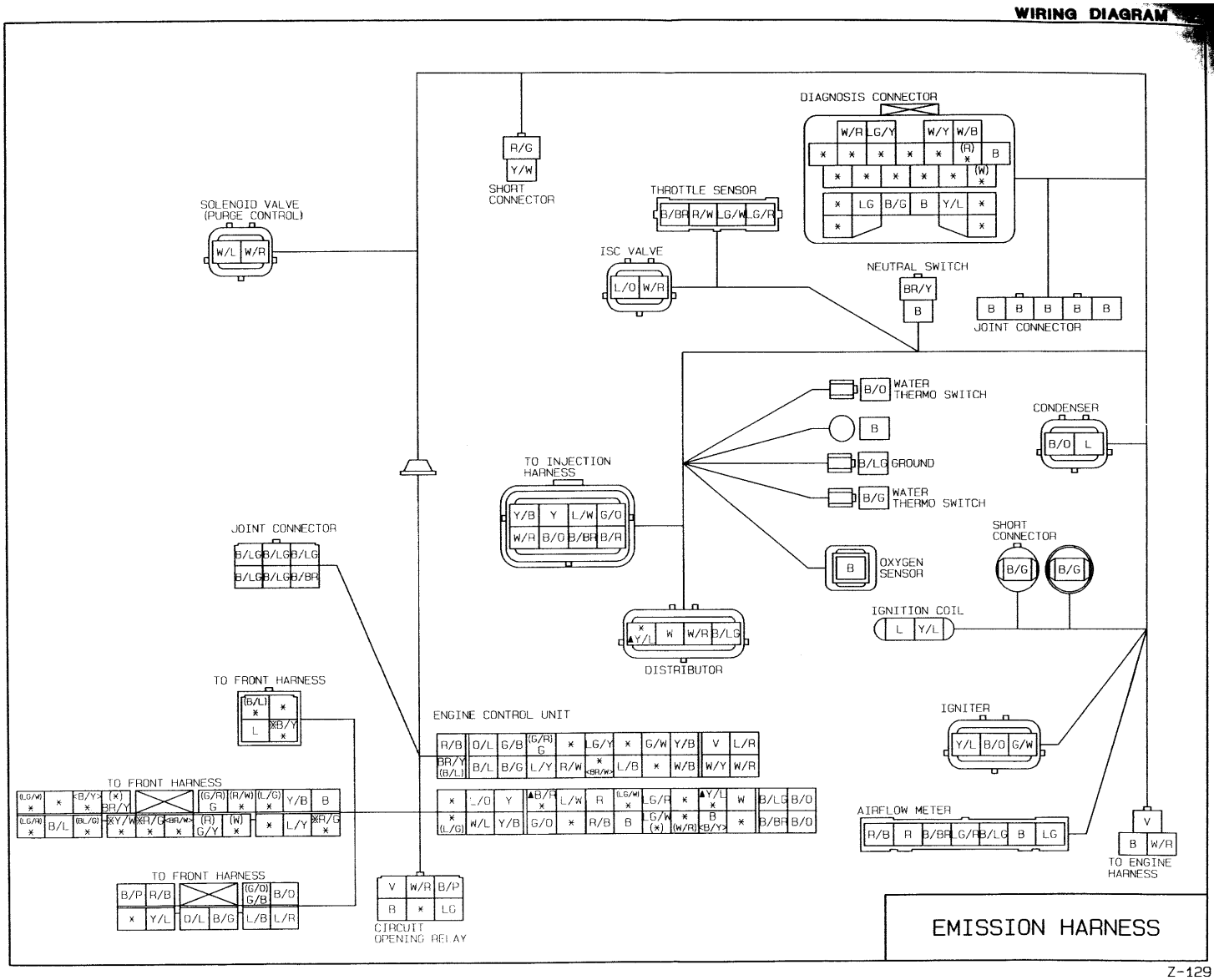

Downloaded from www.Manualslib.com manuals search engine

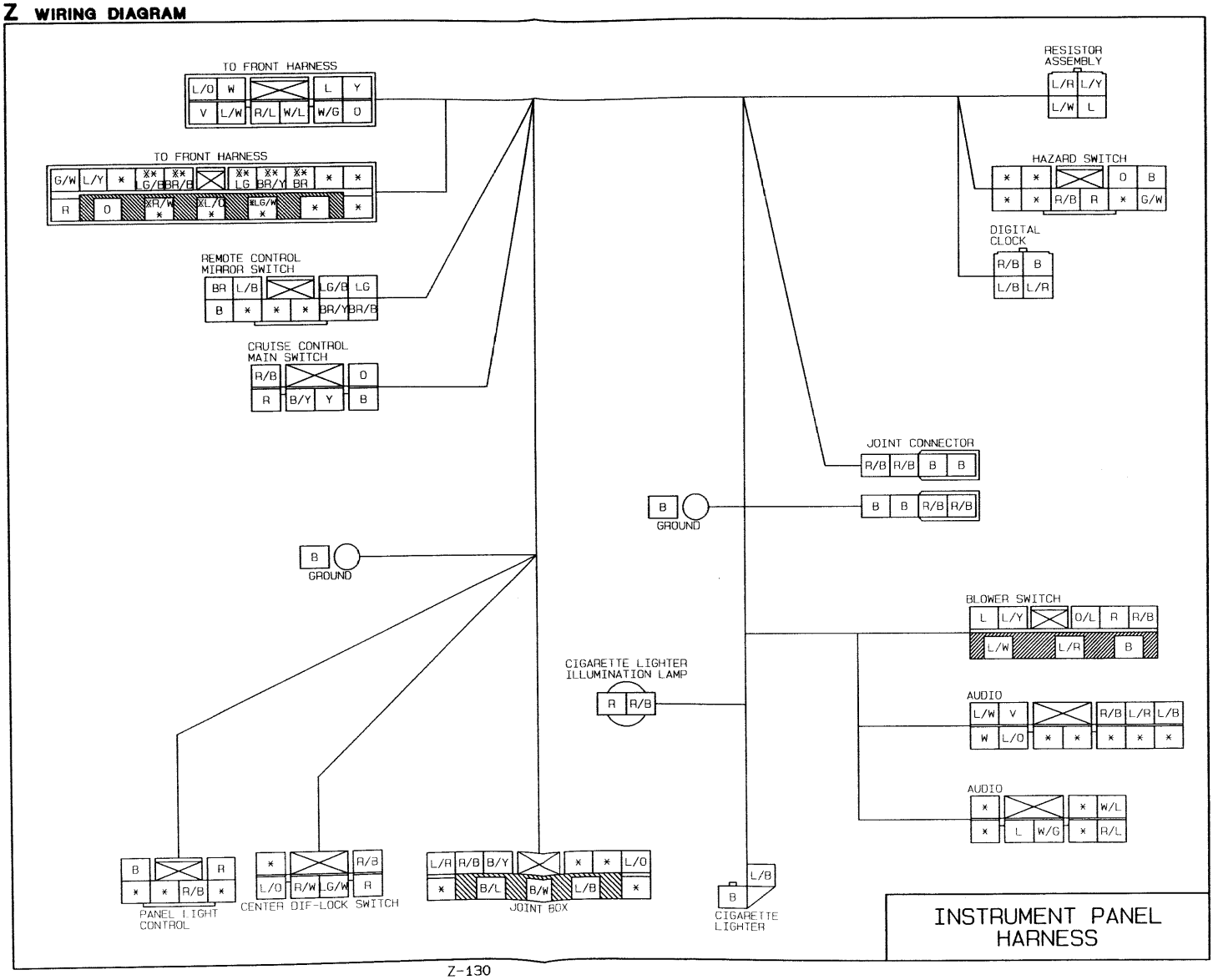

Downloaded from www.Manualslib.com manuals search engine

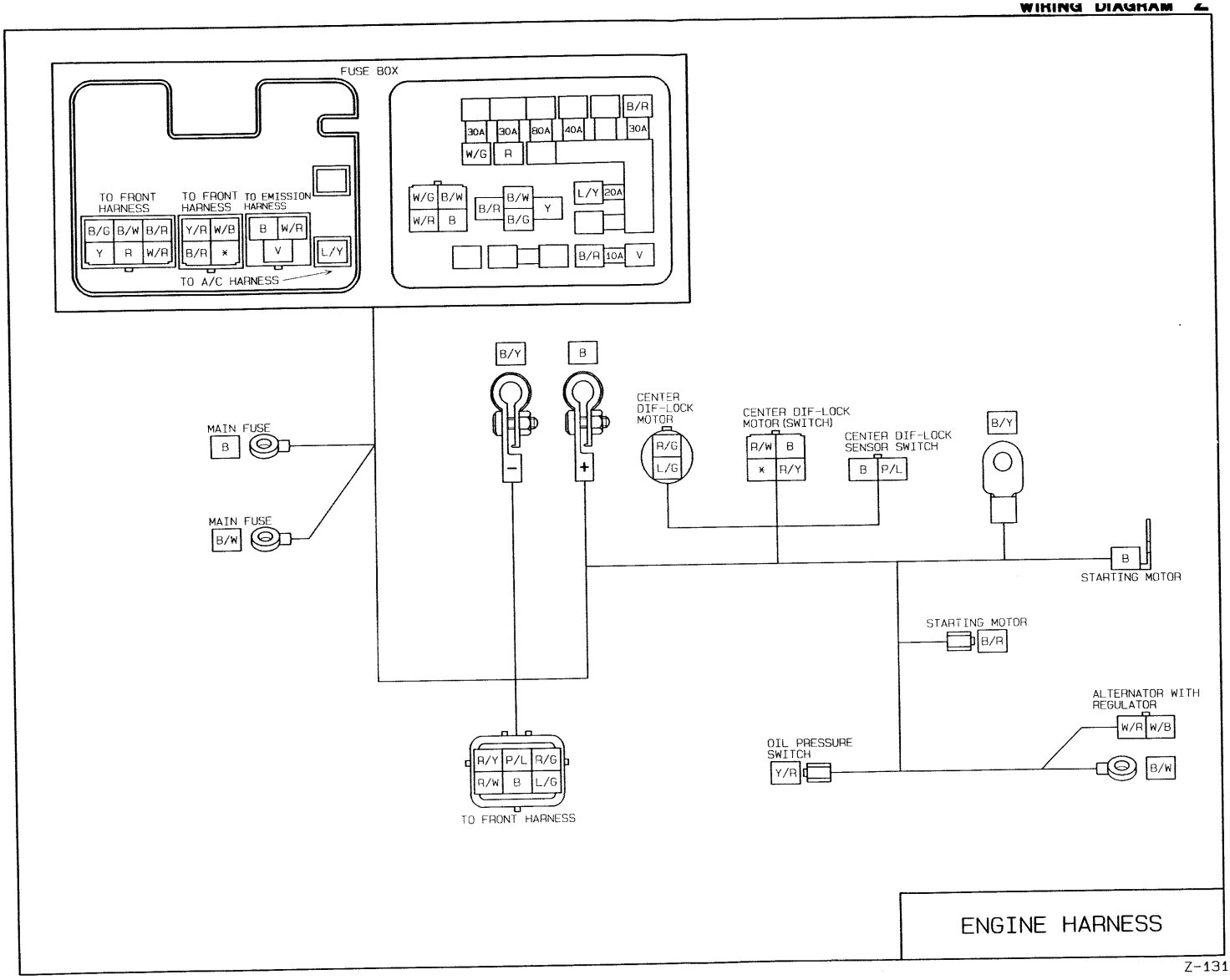

ENGINE HARNESS

Downloaded from www.Manualslib.com manuals search engine

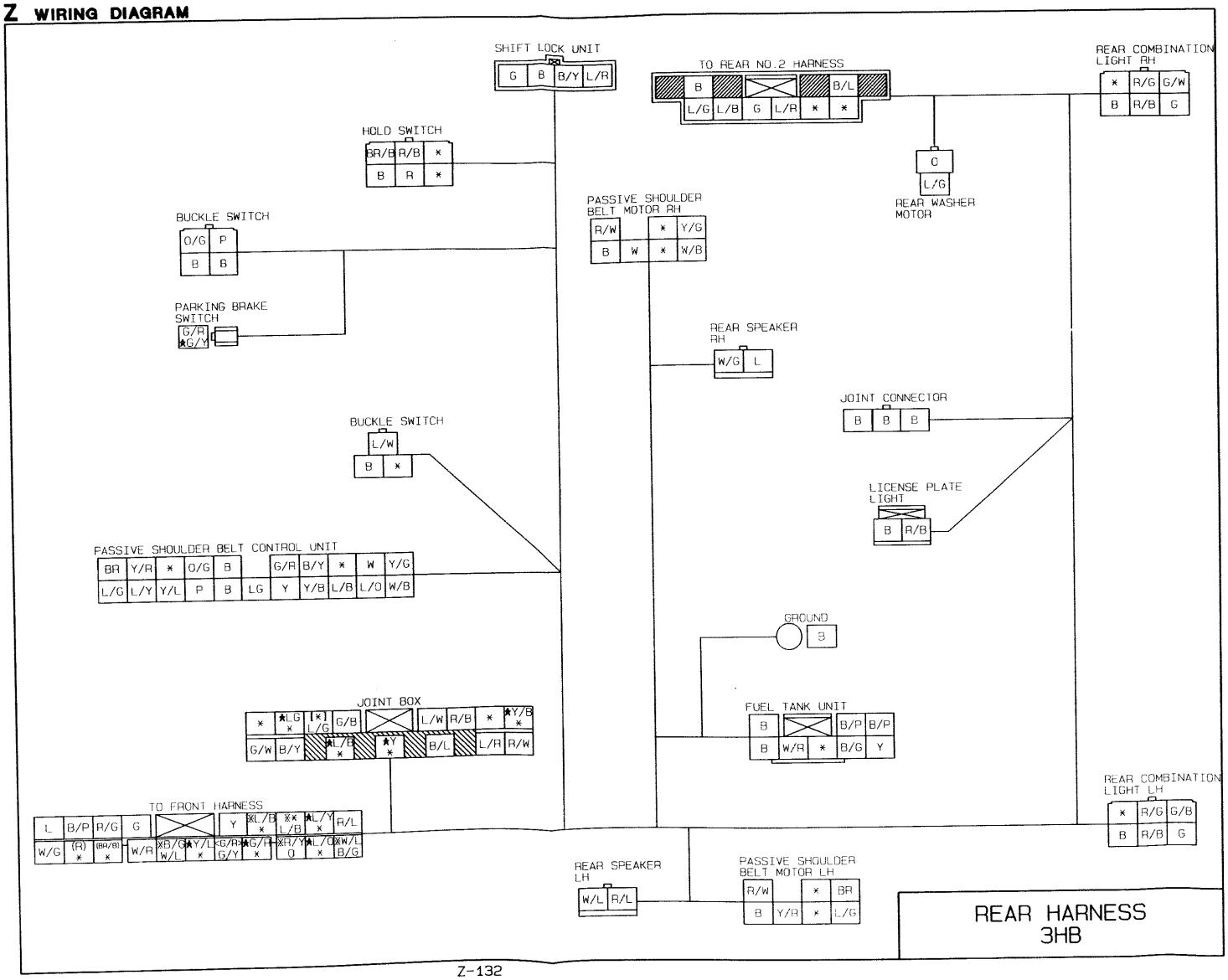

Downloaded from www.Manualslib.com manuals search engine

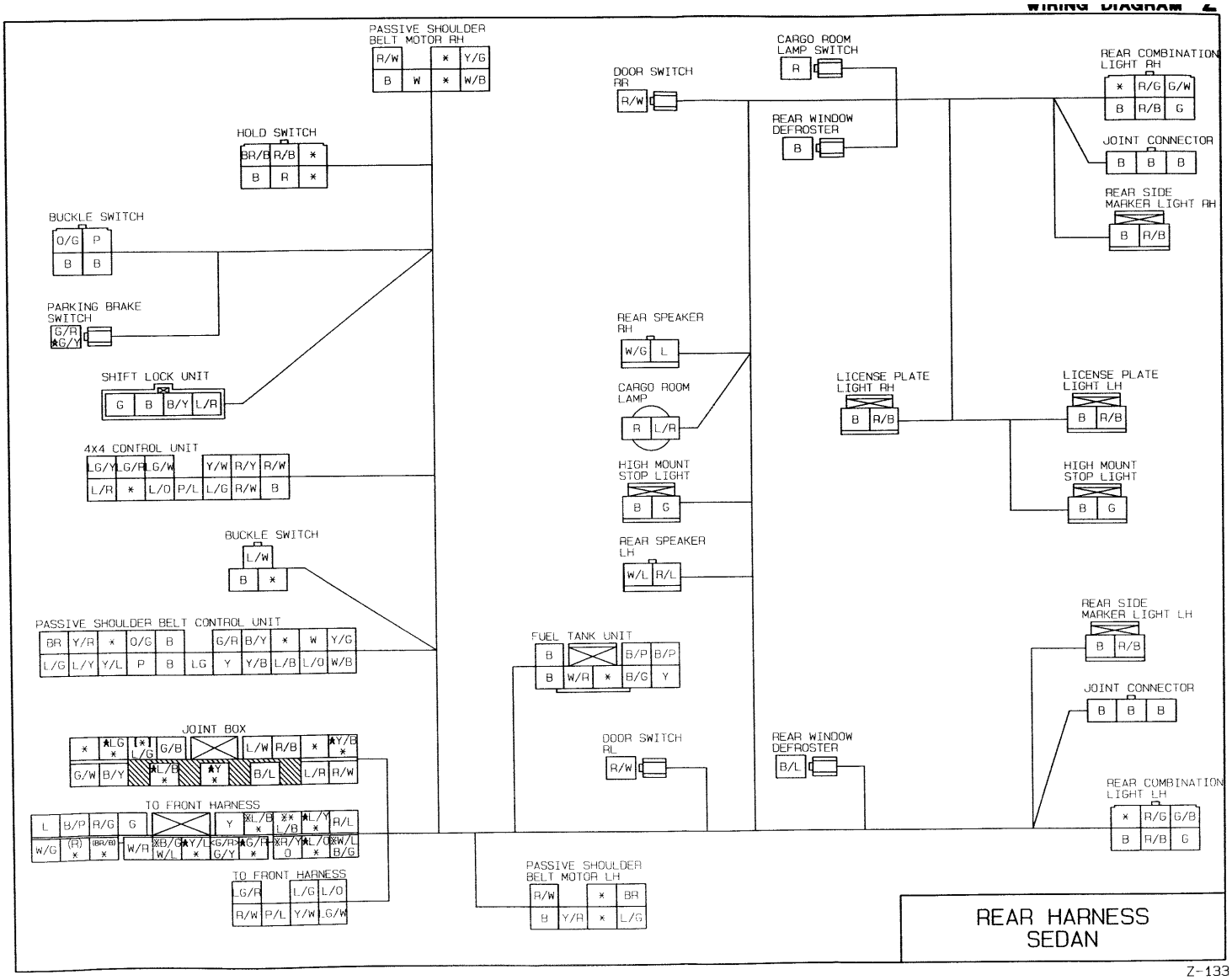

Downloaded from www.Manualslib.com manuals search engine

■ JOINT CONNECTOR & GROUND CIRCUIT

WIRING ORDER INTO JOINT CONNECTOR MAY BE CHANGED

JC-01 JOINT CONNECTOR (F)

B	B	B	B	B

JC-02 JOINT CONNECTOR (F)

B	B	B	B	B

JC-03 JOINT CONNECTOR (F)

B	B	B	B	B

JC-04 JOINT CONNECTOR (EM)

B	B	B	B	B

JC-06 JOINT CONNECTOR (EM)

B/LG	B/LG	B/LG
B/LG	B/LG	B/BR

JC-09 JOINT CONNECTOR (R) (3HB)

B	B	B

JC-12 JOINT CONNECTOR (R) (SEDAN)

B	B	B

JC-13 JOINT CONNECTOR (R) (SEDAN)

B	B	B

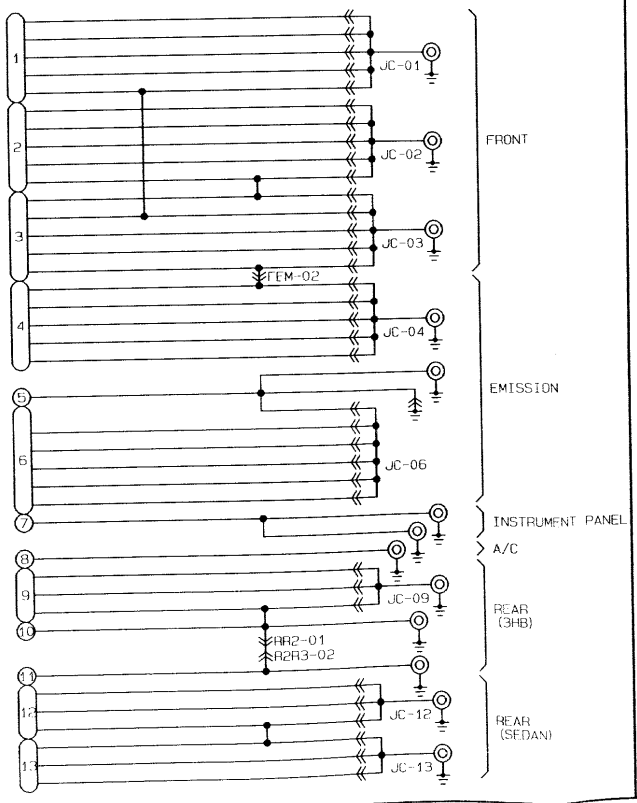

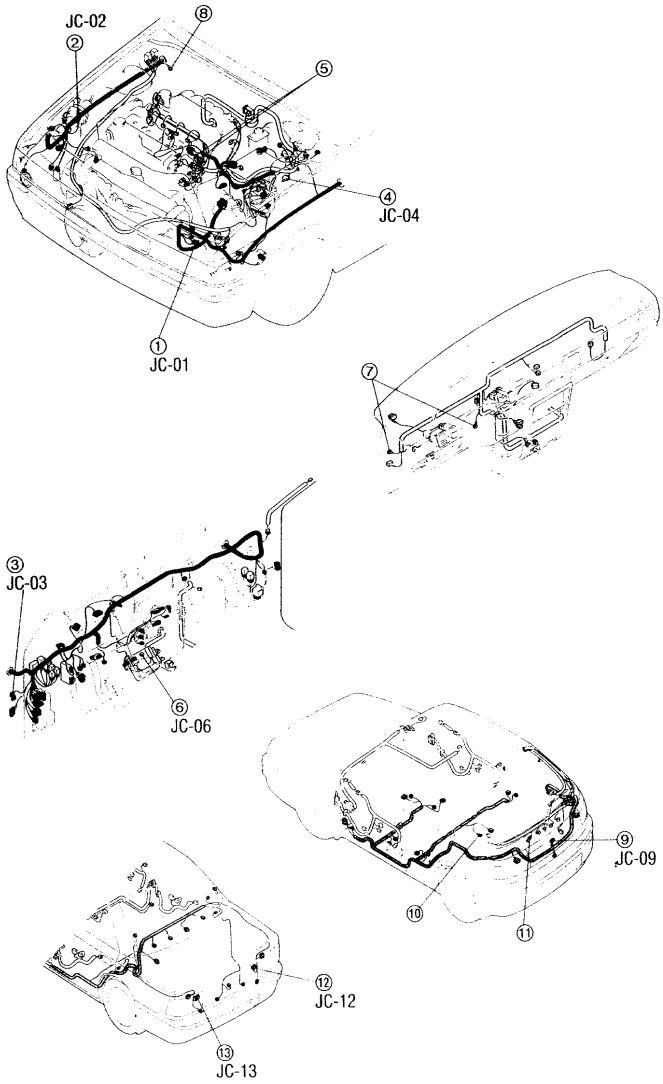

Downloaded from www.Manualslib.com manuals search engine

THE

mazda

LOC.	K1575E	10	INV. LINE
PART NO.	9999-95-027G-90	K67795	INV. NO.
DESC.	323 4WD W/DGM	11/01/89	INV. DATE
QTY. ORD.	QTY. SHIP 1	10828	DLR. CODE

CUSTOMER SATISFACTION

© 1990 Mazda Motor Corporation

Printed in U.S.A.

5T48-10-99G

Part No. 9999-95-027G-90

Downloaded from www.Manualslib.com manuals search engine